iC-HG EVAL HG2D
EVALUATION BOARD DESCRIPTION

ORDERING INFORMATION

Type	Order Designation	Description and Options
Evaluation Board	iC-HG EVAL HG2D	Host Adapter for HG2M type modules
Evaluation Board	iC-HG EVAL HG2D-HSK	Host Adapter for HG2M type modules with heat sink assembly kit

BOARD HG2D

(size 113 mm x 100 mm)

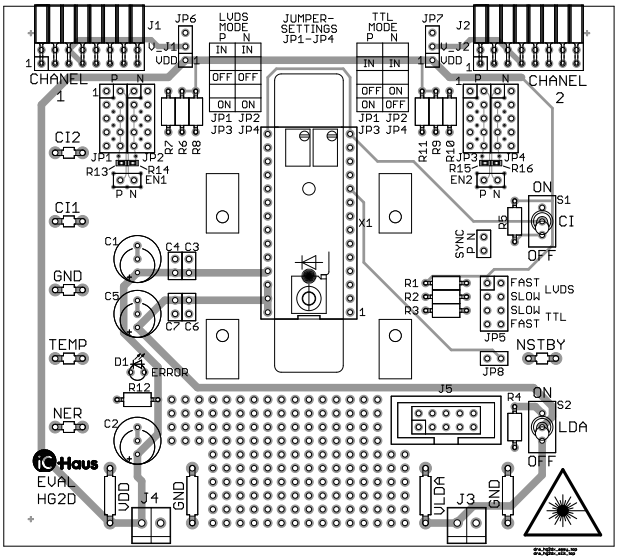

Figure 1: Component side

TERMINAL	DESCRIPTION
J1/J2	Interface to Pulse/Oscillator modules (e.g. iC149/iC213)
CI3456	Control Voltage for channels 3 to 6
CI12	Control Voltage for channels 1 and 2
GND	Ground
TEMP	Chip Temperature (if applicable)
NER	Error Output (low active)
VDD	Power Supply iC*
GND	Ground
VLDA	Power Supply laser diode*
GND	Ground
NSTBY	Standby input (if applicable)
J5	SPI interace (if applicable)

*Consult the relevant iC data sheet or module manual for a valid range.

Copyright © 2018 iC-Haus

RELATED DOCUMENTS

- iC-HG Data Sheet

→ http://www.ichaus.de/iC-HG

- iC-HG2M High Speed Module

→ http://www.ichaus.de/iC-HG

- iC149 Programmable Pulse Generator

→ http://www.ichaus.de/iC149

- iC-HG Programmable Oscillator

→ http://www.ichaus.de/iC213

SCHEMATIC

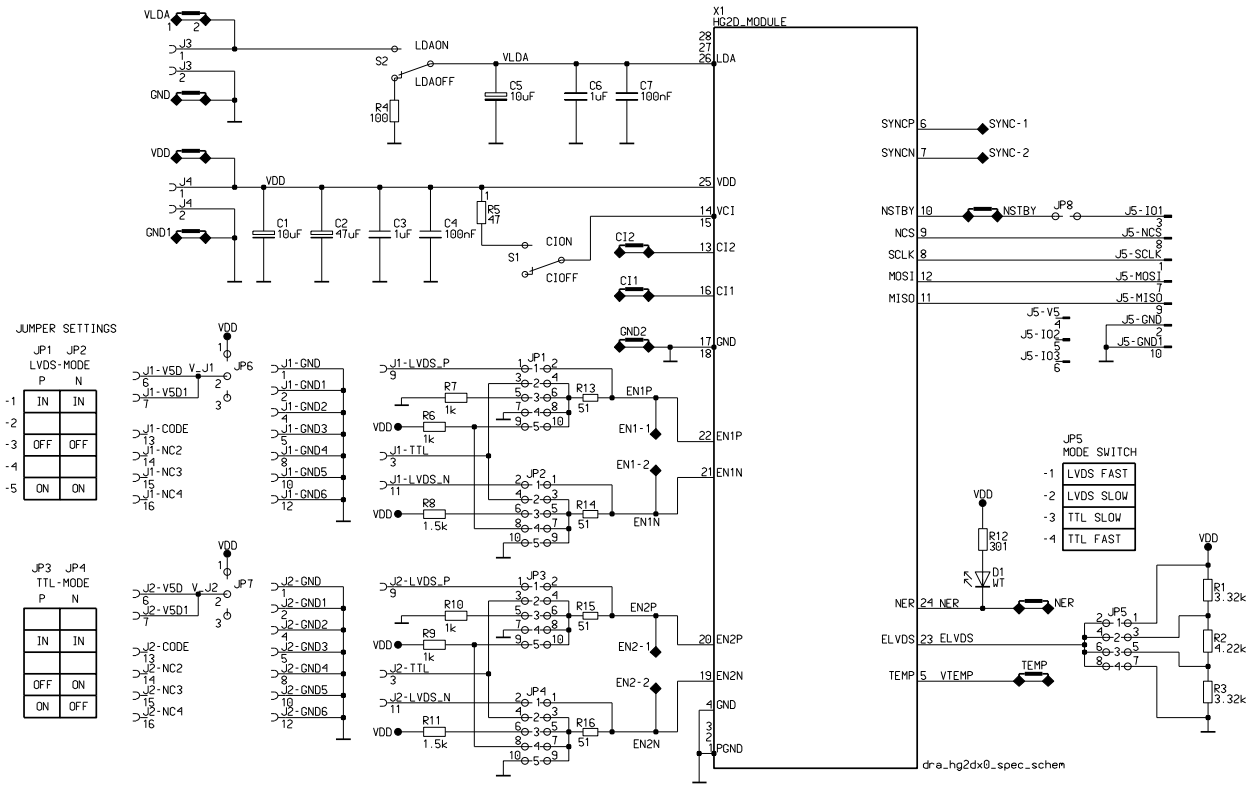

Figure 2: Circuit diagram HG2D

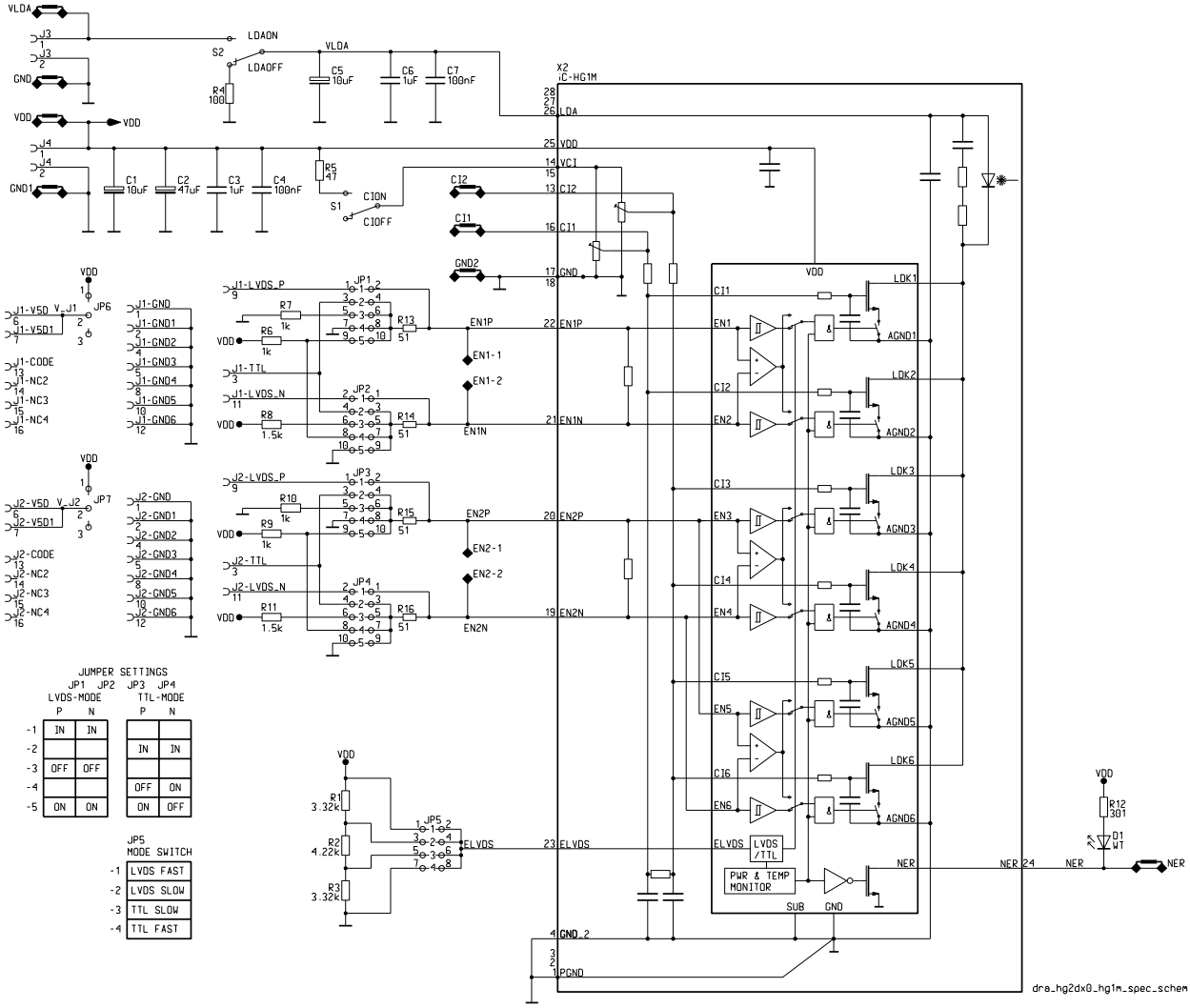

Figure 3: Circuit diagram with iC-HG module

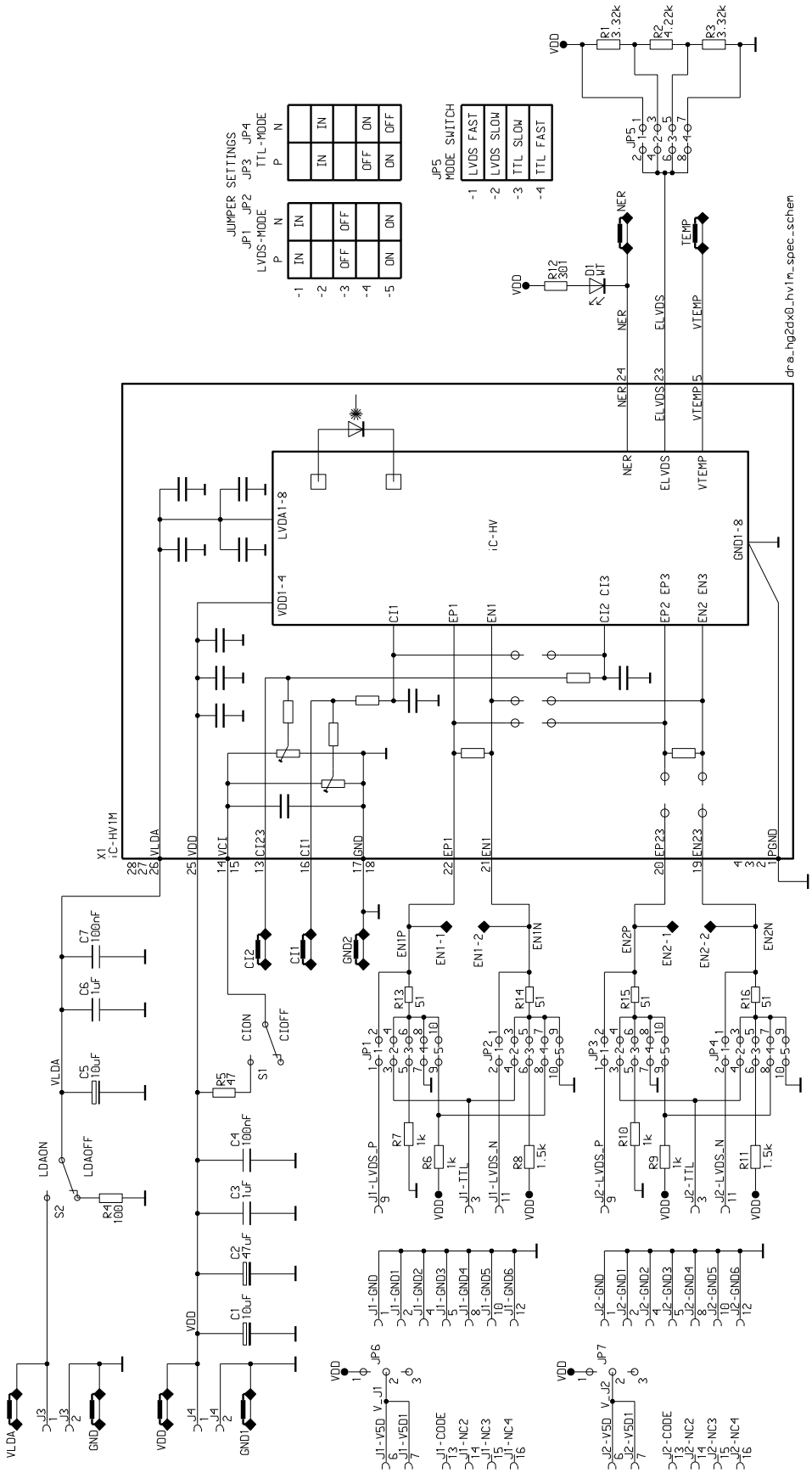

Figure 4: Circuit diagram with iC-HV module

JUMPER DESCRIPTION

JP1 JP3	JP2 JP4	Function	Comments
00	00	LVDS	LVDS control via J1/J2
00	00	TTL	
00	00	LVDS off	
00	00	TTL off/on	
00	00	LVDS/TTL on/off	
00	00	LVDS	
00	00	TTL	TTL control via J1/J2
00	00	LVDS off	
00	00	TTL off/on	
00	00	LVDS/TTL on/off	
00	00	LVDS	
00	00	TTL	
00	00	LVDS off	
00	00	TTL off/on	TTL control ON (static)
00	00	LVDS/TTL on/off	
00	00	LVDS	
00	00	TTL	
00	00	LVDS off	
00	00	TTL off/on	TTL control OFF (static)
00	00	LVDS/TTL on/off	
00	00	LVDS	
00	00	TTL	
00	00	LVDS off	
00	00	TTL off/on	
00	00	LVDS/TTL on/off	LVDS control ON (static)
00	00	LVDS	
00	00	TTL	
00	00	LVDS off	LVDS control OFF (static)
00	00	TTL off/on	
00	00	LVDS/TTL on/off	

JP5	TTL SLOW/FAST, LVDS SLOW/FAST	Transient control
JP6	V_J1	Connects/disconnects VDD to/from J1
JP7	V_J2	Connects/disconnects VDD to/from J2

SPI CONNECTOR PINOUT

J1: SPI Connector 10-pin Connector - male		
PIN	**Name**	**Function**
1	SCLK	SPI Clock
2	GND	Ground
3	NSTBY	Standby (low active, requires JP8 to be set
4		
5		
6		
7	MOSI	SPI Data Input
8	NCS	Chip Selct (low active)
9	MISO	SPI Data Output
10	GND	Ground

Table 1: SPI Connector.

ASSEMBLY PART LIST

Device	Value (typical)	Comment
C1, C5	10 µF	Blocking capacitor
C2	47 µF	Blocking capacitor
C3, C6	1 µF	Blocking capacitor
C4, C7	100 nF	Blocking capacitor
D1	LED	Error indicator
EN1, EN2		Measurement terminals
J1, J2		Pulse/Oscillator module interface
JP1, JP2, JP3, JP4		See jumper configuration
JP5, JP6, JP7		See jumper configuration
R1, R3	3.32 kΩ	TTL/LVDS fast/slow settings
R2	4.22 kΩ	TTL/LVDS fast/slow settings
R4	100 Ω	Discharge resistor
R5	47 Ω	Current limitation
R6, R7, R9, R10	1 kΩ	Pull Up/Down resistors
R8, R11	1.5 kΩ	Pull Up/Down resistors
R12	301 Ω	Current limitation
S1	switch	CI on/off
S2	switch	LDA on/off

HEAT SINK ASSEMBLY KIT (OPTIONAL)

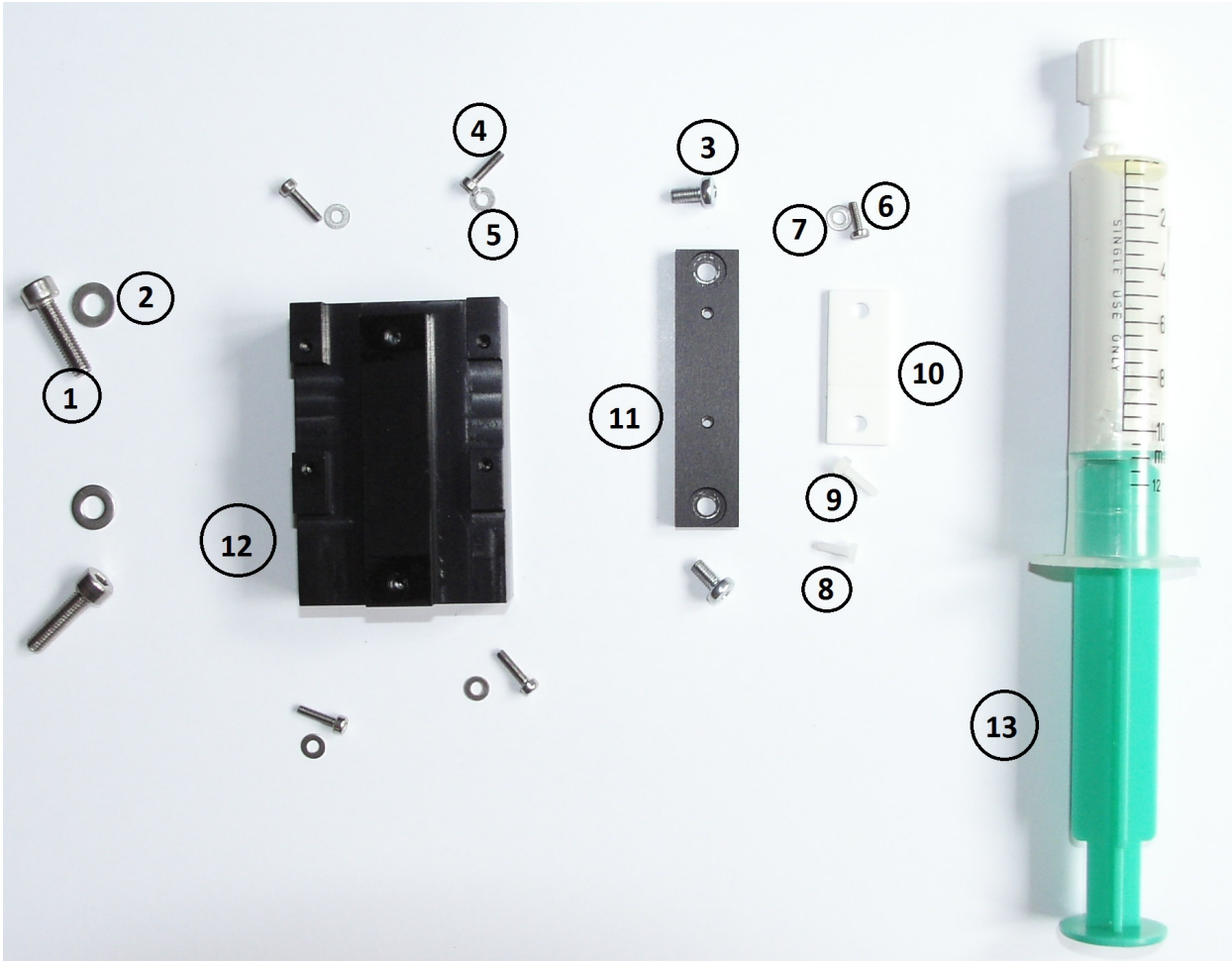

Figure 5: Heat Sink Kit overview

Item	Quantity	Material	Description
1	2	steel	M4x16, hex socket screw
2	2	steel	$Ø_A$ ~ 8.8 mm, washer for M4x16 screw
3	2	steel	M3x6, Phillips screw
4	4	steel	M2x8, hex socket screw
5	4	steel	$Ø_A$ ~ 5 mm, washer for M2x8 screw
6	1	steel	M2x6, slot screw
7	1	steel	$Ø_A$ ~ 5 mm, washer for M2x6 screw
8	1	polyamide	M2x6, slot screw
9	1	polyamide	M2x8, slot screw
10	1	aluminium oxide	disc 28.3 mm x 12 mm x 1.5 mm
11	1	aluminium	HG1M heat sink 52 mm x 12 mm x 4 mm
12	1	aluminium	HG2DZ heat sink 54.8 mm x 38 mm x 21 mm
13	1	metal oxide	thermal grease 10 ml

Table 2: Heat Sink Kit material

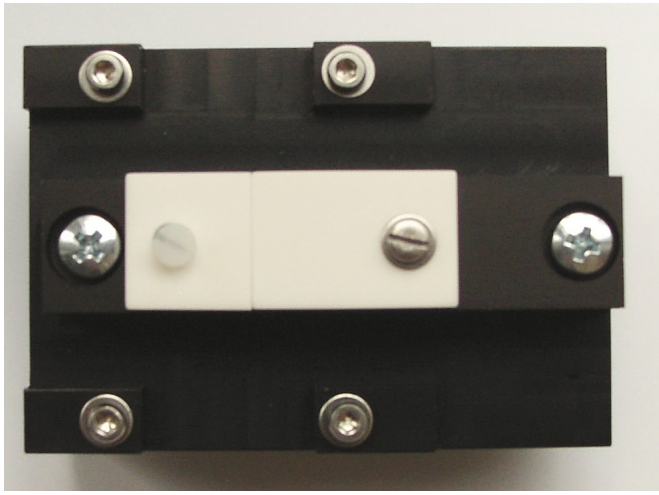

Figure 6: Pre-assembled Heat Sink Kit, top view



Figure 7: Pre-assembled Heat Sink Kit, side view



Figure 8: Pre-assembled Heat Sink Kit, bottom view

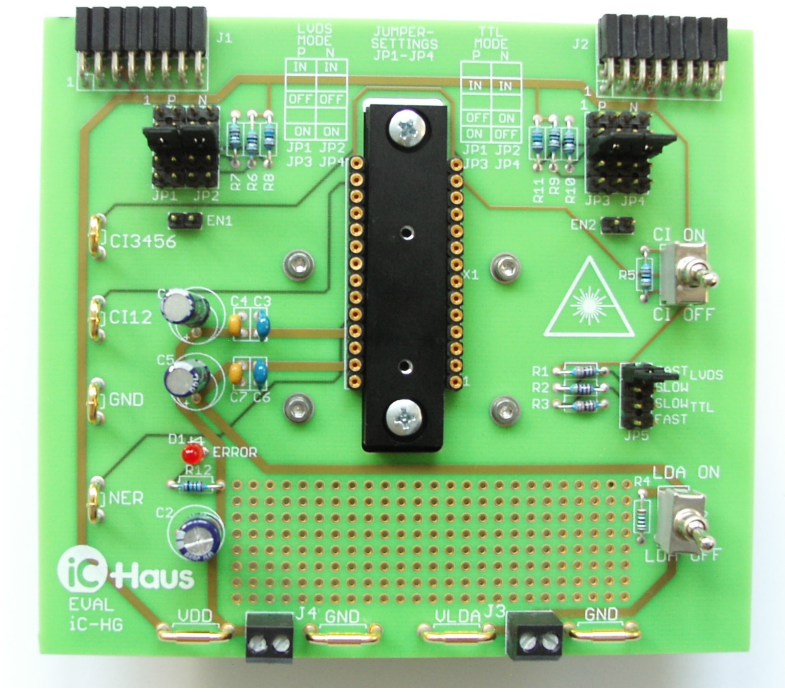

Figure 9: HG2D with assembled heat sink

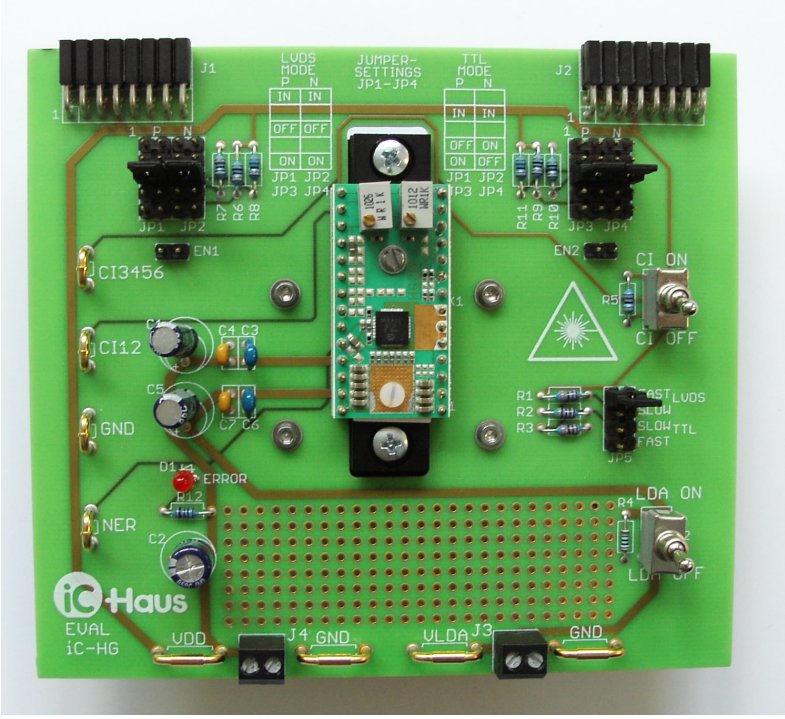

Figure 10: HG2D with heat sink and HG2M

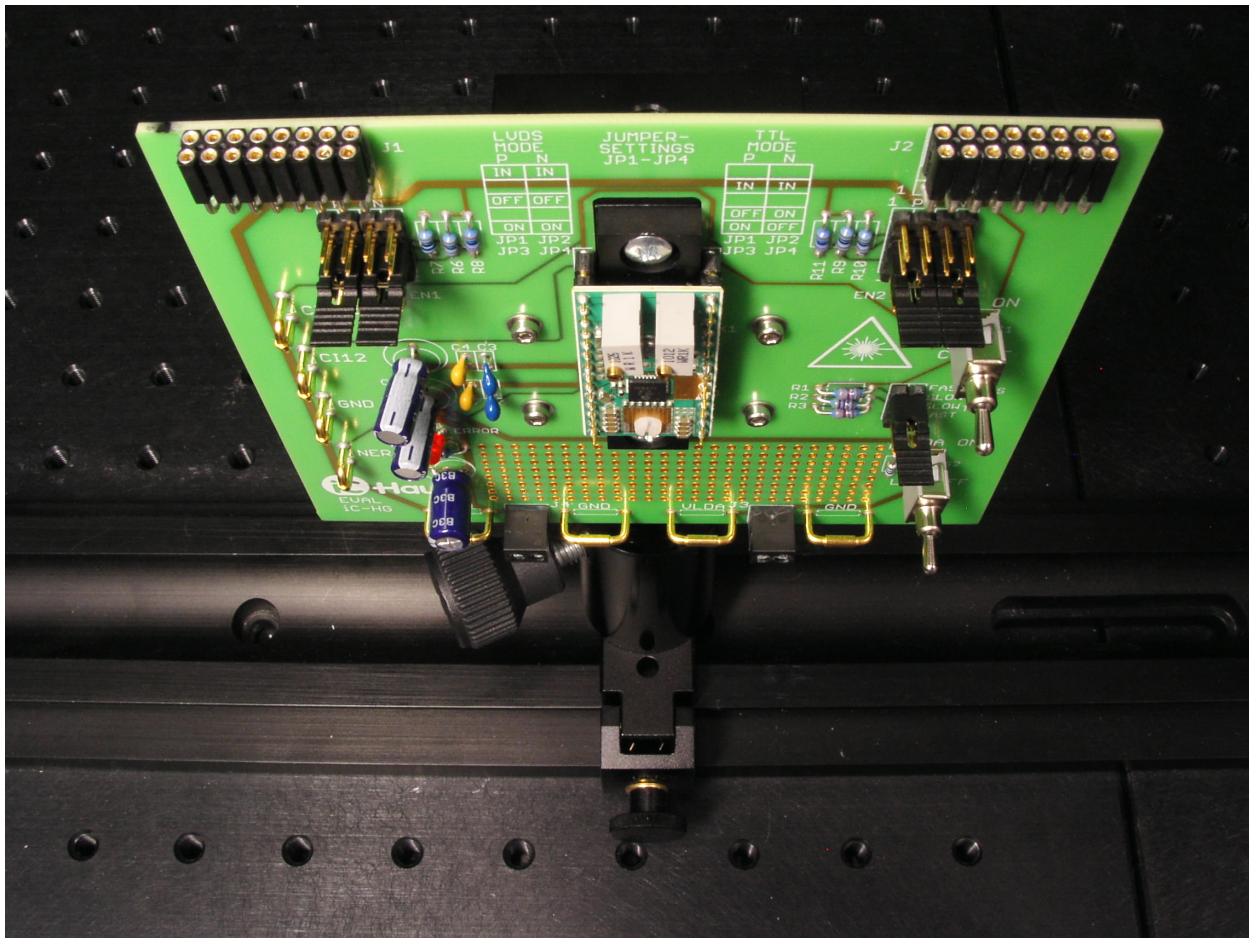

Figure 11: HG2D assembled to an optical bench

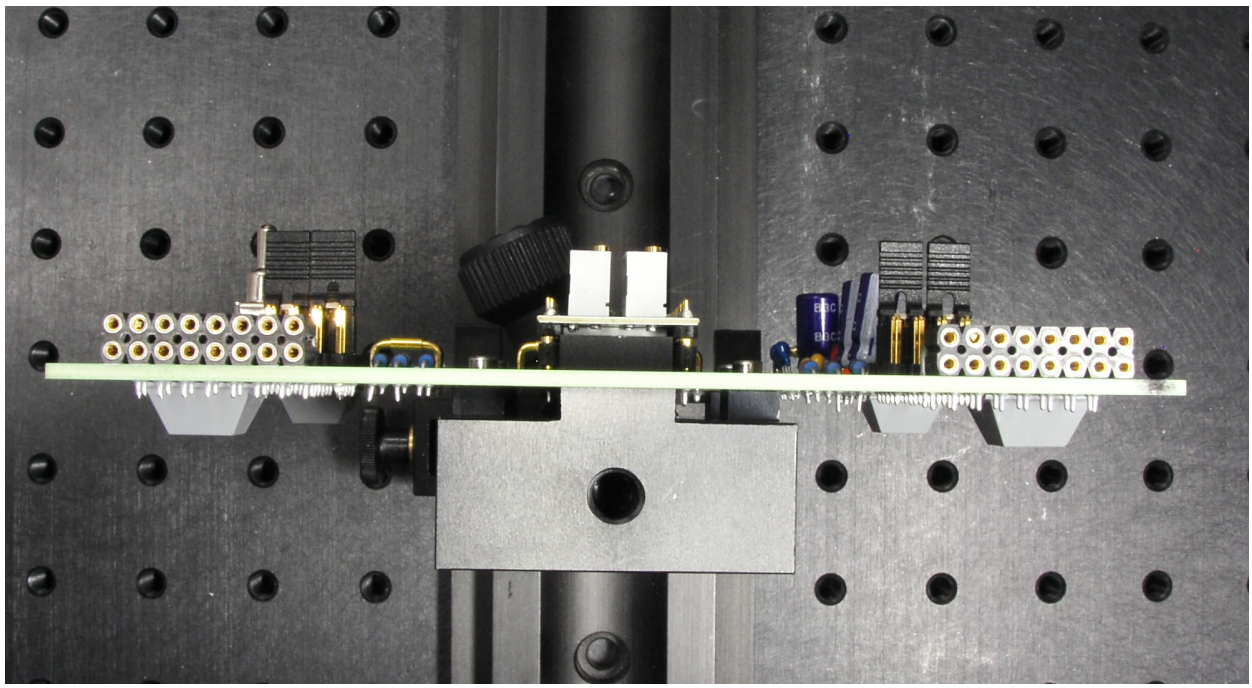

Figure 12: Top view

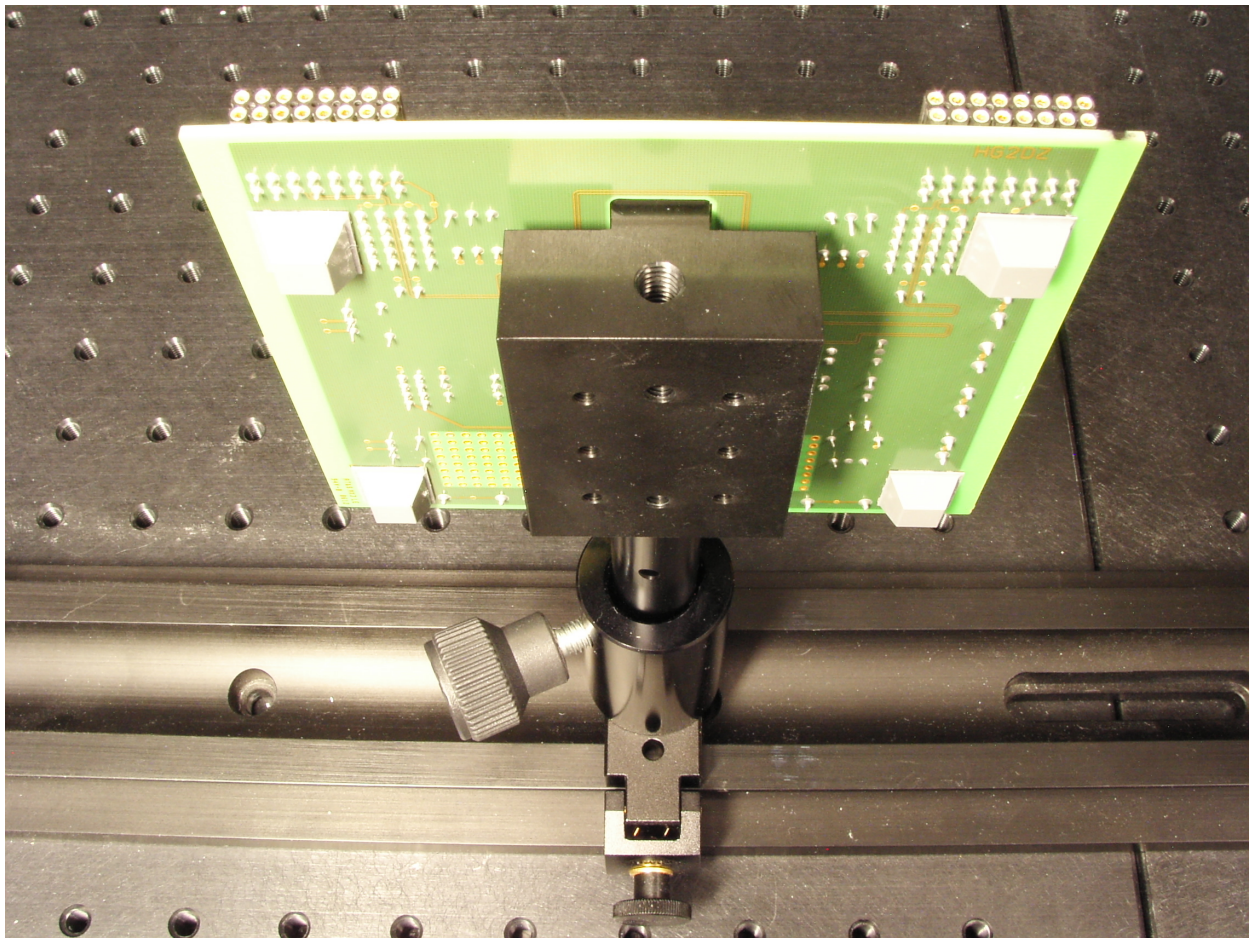

Figure 13: Rear view

Use of the thermal grease

1. Apply thermal grease extensively but thinly
2. Apply thermal grease to top side of the HG1M heat sink (11) but only where the ceramic disc is supposed to be attached (10)
3. Apply thermal grease to the metal area of the bottom side of the HG2M module and attach ceramic disc (10)
4. Apply thermal grease to the whole bottom side of the HG1M heat sink (11)
5. Pre-assemble the whole heat sink kit
6. Tighten all screws
7. Unfasten the polyamide screw (8 resp. 9) and apply thermal grease to the metal area on the HG2M module, where the C-mount laser diode is supposed to be attached
8. Mount the C-mount laser diode, carefully tightening the screw (choose the appropriate screw length)
9. Solder the metal band to the cathode area on the HG2M module

The HG2DZ heat sink features numerous screw threads on the back side for mounting a larger standard heat sink. To that end the complete back side needs to be covered with thermal grease.

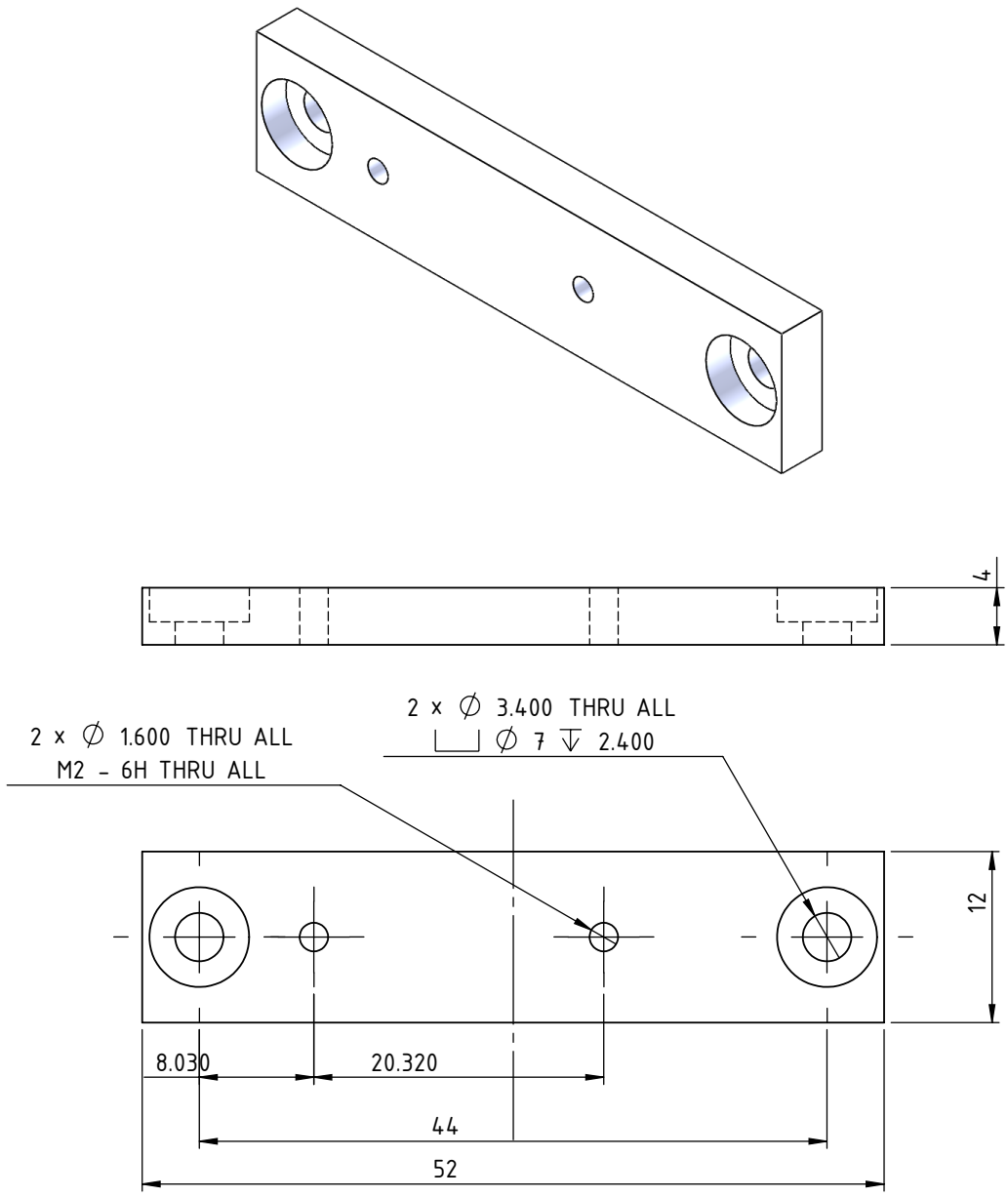

drc_hg1m_heatsink, 2:1
standard tolerances ISO 2768-mK
aluminum, black anodizised

Figure 14: Dimensions of the HG1M heat sink

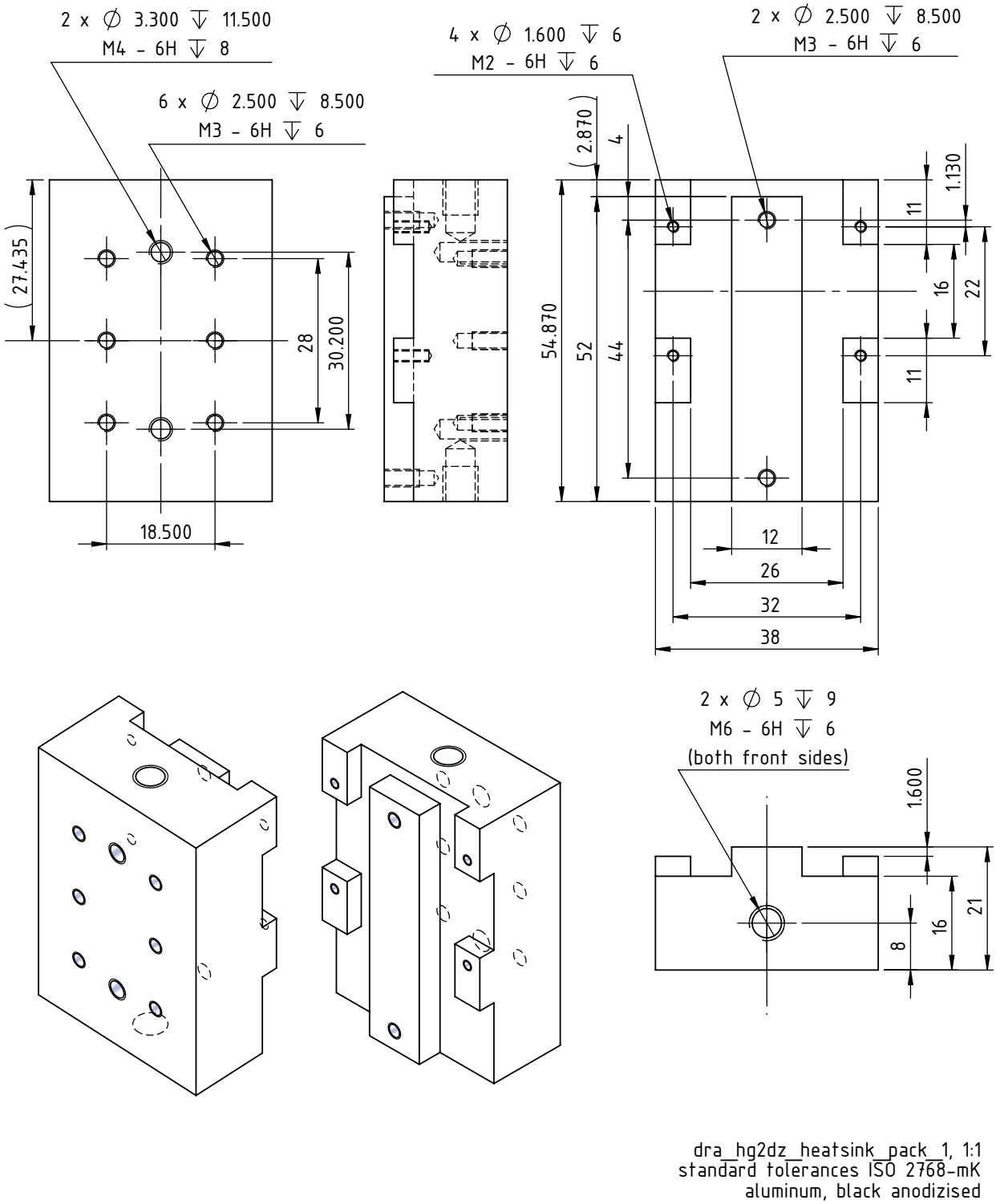

Figure 15: Dimensions of the HG2DZ heat sink

REVISION HISTORY

Rev	Notes	Pages affected
A1	Initial version	
A2	Screen print for jumpers updated	1
A3	V5D Decoupler and Heat Sink Assembly Kit added	4–11
A4	Typo corrected	1
A5	Board update for iC-HV modules, V5D Decoupler removed, jumpers JP6, JP7 added	1–5
A6	Voltage ranges for VDD and VLDA removed, reference to data sheets added	1
A7	Board update for iC-HS modules, jumper JP8 and connector J5 added	1–6

iC-Haus expressly reserves the right to change its products and/or specifications. An Infoletter gives details as to any amendments and additions made to the relevant current specifications on our internet website www.ichaus.com/infoletter and is automatically generated and shall be sent to registered users by email.
Copying – even as an excerpt – is only permitted with iC-Haus' approval in writing and precise reference to source.

The data specified is intended solely for the purpose of product description and shall represent the usual quality of the product. In case the specifications contain obvious mistakes e.g. in writing or calculation, iC-Haus reserves the right to correct the specification and no liability arises insofar that the specification was from a third party view obviously not reliable. There shall be no claims based on defects as to quality in cases of insignificant deviations from the specifications or in case of only minor impairment of usability.
No representations or warranties, either expressed or implied, of merchantability, fitness for a particular purpose or of any other nature are made hereunder with respect to information/specification or the products to which information refers and no guarantee with respect to compliance to the intended use is given. In particular, this also applies to the stated possible applications or areas of applications of the product.

iC-Haus products are not designed for and must not be used in connection with any applications where the failure of such products would reasonably be expected to result in significant personal injury or death *(Safety-Critical Applications)* without iC-Haus' specific written consent. Safety-Critical Applications include, without limitation, life support devices and systems. iC-Haus products are not designed nor intended for use in military or aerospace applications or environments or in automotive applications unless specifically designated for such use by iC-Haus.
iC-Haus conveys no patent, copyright, mask work right or other trade mark right to this product. iC-Haus assumes no liability for any patent and/or other trade mark rights of a third party resulting from processing or handling of the product and/or any other use of the product.

Software and its documentation is provided by iC-Haus GmbH or contributors "AS IS" and is subject to the ZVEI General Conditions for the Supply of Products and Services with iC-Haus amendments and the ZVEI Software clause with iC-Haus amendments (www.ichaus.com/EULA).