P3AM-5392-07ENZ0

FUJITSU Storage
ETERNUS LT40 S2/LT60 S2 LTO Library

Installing, Starting Up and Maintaining

FUJITSU

This page is intentionally left blank.

Preface

This manual briefly explains the operations that need to be performed by the user in order to use the ETERNUS LT40 S2/LT60 S2 LTO Library.

Seventh Edition
April 2018

Target Groups

This manual is written primarily for users with access to the entire range of the ETERNUS LT40 S2/LT60 S2 LTO library functions, for system administrators and field engineering staff. Basic hardware knowledge is required.

Notational Conventions

The following notational conventions are used in this manual.

italics	Denote names of commands, system calls, functions, files, procedures, programs etc. as well as menu options and input/output fields from figures in the main body of text.
`fixed-pitch font`	Indicates system output, such as error messages, messages, notes, file excerpts and program examples.
`fixed-pitch semi-bold font`	Denotes user input in examples.
1., 2., 3. ...	Activities of the user.
Note	Highlights additional information that should be noted to assist understanding of the surrounding text passages.
CAUTION	Calls attention to a situation that can cause data loss.
WARNING	Calls attention to a situation that is potentially lethal or hazardous to people.
 CAUTION	A discharge of static electricity can damage static-sensitive devices or micro circuitry. Proper packaging and grounding techniques are necessary precautions to prevent damage.

Copyright 2018 FUJITSU LIMITED

Warnings

- Ventilation
  The product should be situated so that its location or position does not interfere with proper ventilation.
- Heat
  The product should be situated away from heat sources such as radiators, heat registers, furnaces, or other heat producing appliances.
- Power sources
  The product should be connected to a power source only of the type directed in the operating instructions or as marked on the product.
- Power cord protection
  The AC line cord should be routed so that it is not likely to be walked on or pinched by items placed upon or against it, paying particular attention to the cord at the wall receptacle, and the point where the cord exits from the product.
- Object and liquid entry
  Care should be taken to insure that objects do not fall and liquids are not spilled into the product's enclosure through openings.

Precautions

- Do not expose the unit to moisture. The operating temperature for this unit is between 10 °C (50 °F) and 35 °C (95 °F).
- Use the unit on a firm level surface free from vibration.
- Do not place anything on top of the unit.

Product Warranty Caution

The warranty for the tape library shall not apply to failures of any unit when:

- The tape library is physically abused or used in a manner that is inconsistent with the operating instructions or product specification defined by the manufacturer.
- The tape library fails because of accident, misuse, abuse, neglect, mishandling, misapplication, alteration, faulty installation, modification, or service by anyone other than the factory service center or its approved agent.
- The tape library is repaired by anyone, including an approved agent, in a manner that is contrary to the maintenance or installation instructions supplied by the manufacturer.
- The manufacturer's serial number tag is removed.
- The tape library is damaged because of improper packaging on return.
- Unauthorized modifications to the unit configuration by the customer may result in loss of guarantee by the vendor.

Copyright 2018 FUJITSU LIMITED

Rack Stability

WARNING

To reduce the risk of personal injury or damage to equipment:

- Extend levelling jacks to the floor.
- Ensure that the full weight of the rack rests on the levelling jacks.
- Install stabilizing feet on the rack.
- In multiple-rack installations, secure racks together.
- Extend only one rack component at a time. Racks may become unstable if more than one component is extended.

Copyright 2018 FUJITSU LIMITED

Table of Contents

Chapter 1 Product Description and Features 12

1.1 Front Panel 13
1.2 Rear Panel 15
1.3 Inside Components 19

Chapter 2 Installing the Tape Library 20

2.1 Location Requirements 20
2.2 Unpacking the Tape Library 21
2.3 Identifying Product Components 24
2.4 Removing the Shipping Lock 24
2.5 Rack Mounting the Library 26
2.5.1 Preparing 26
2.5.2 Installing the Library in a Rack 27
2.6 Connecting 32
2.6.1 Connection Recommendations and Additional Remarks 32
2.6.2 Power and Signal Cable 33
2.6.3 Verifying the Detection of the Library Under Windows 35

Chapter 3 Operating the Tape Library 36

3.1 Operator Control Panel (OCP) 36
3.1.1 OCP Philosophy 36
3.1.2 Power-Up Display 37
3.1.3 Note about the LEDs 37
3.1.4 Input Modes 37
3.1.5 Power ON/OFF 38
3.1.6 OCP Menu Flow Charts 39
3.2 Partitioning the Library 40
3.2.1 ETERNUS LT40 S2 40
3.2.2 ETERNUS LT60 S2 41
3.3 Tape Cartridges 44
3.3.1 ETERNUS LT40 S2/LT60 S2 LTO Library Tape Library Cartridge Type 44
3.3.2 Using and Maintaining Tape Cartridges 45

Copyright 2018 FUJITSU LIMITED

3.3.3 Labeling Tape Cartridges 45
3.3.4 Write-protecting Tape Cartridges 46
3.3.5 Backward Read Compatibility 47
3.3.6 Barcode Reader 47
3.3.7 Activating the Autoclean Function 47
3.4 Magazines 48
3.4.1 Inserting Tape Cartridges Into a Magazine 48
3.4.2 Mailslot 50
3.5 Remote Management Unit (RMU) 50
3.5.1 Overview 50
3.5.2 Library Status Icons 50
3.5.3 Login 51
3.5.4 Identity 51
3.5.5 Status 53
3.5.6 Configuration 55
3.5.7 Operations 66
3.5.8 Service 67

Chapter 4 Troubleshooting 72

4.1 Installation Problems 72
4.1.1 LUN Scanning 72
4.1.2 Backup Application Installation 72
4.1.3 Device Driver Installation 72
4.2 Troubleshooting Table 73
4.3 Removing Stuck Tapes From Slots 76
4.4 Magazine Does not Unlock via OCP or RMU 77
4.5 Media Removal Prevented 79
4.6 Tape Library Error Codes 80
4.6.1 Example Error Code 80
4.6.2 Error Code Table 81

Chapter 5 Servicing the Tape Library 85

5.1 Possible Tools Needed 85
5.2 Electrostatic Discharge 85
5.3 Removing and Replacing a Tape Drive 86
5.4 Removing and Replacing the Library Controller 88
5.5 Removing and Replacing a Power Supply 90

Copyright 2018 FUJITSU LIMITED

5.6 Replacing a Redundant Power Supply 91
5.7 Removing and Replacing a Magazine Using the OCP 92
5.8 Removing and Replacing a Magazine Using the RMU 93
5.9 Removing and Replacing the Base Chassis 94
5.10 Adding a New License Key 95
5.10.1 Sequence of Installation 96
5.10.2 Add a License Key via OCP 96
5.10.3 Add the License Key via RMU 99
5.11 How to Get the Serial No. in Storage Systems 101

Chapter 6 Technical Specifications 103

Chapter 7 Packaging Before Transportation 104

Chapter 8 Recycling and Disposal 106

Chapter 9 Regulatory Information 107

9.1 Device Standards 107
9.2 FCC (United States) 108
9.3 Canadian Verification 108
9.4 CE Notice 108

Copyright 2018 FUJITSU LIMITED

List of Figures

Figure 1.1 ETERNUS LT60 S2 front and rear view 12
Figure 1.2 Front panel ETERNUS LT60 S2 14
Figure 1.3 ETERNUS LT40 S2 rear panel 15
Figure 1.4 ETERNUS LT60 S2 rear panel 15
Figure 1.5 SAS tape drive (LTO Ultrium 5) 16
Figure 1.6 FC tape drive (LTO Ultrium 6 with Ethernet port) 17
Figure 1.7 FC tape drive (LTO Ultrium 6, 7, 8) 17
Figure 1.8 SAS tape drive (LTO Ultrium 6, 7, 8) 18
Figure 1.9 Inside components 19
Figure 2.1 Unpacking the library (ETERNUS LT40 S2) 22
Figure 2.2 Unpacking the library (ETERNUS LT60 S2) 23
Figure 2.3 Instructions for shipping lock 24
Figure 2.4 Shipping lock and label 25
Figure 2.5 Shipping lock and label on the rear panel 25
Figure 2.6 3 different rackmount rails 27
Figure 2.7 Mounted support bracket 28
Figure 2.8 Mounting cage nuts at the front of the rack (PRIMECENTER rackmount rail) 28
Figure 2.9 Setting in the right rail at the front 29
Figure 2.10 Screwing on the right rail at the front 29
Figure 2.11 Mounted right sliding rail (rear side) 30
Figure 2.12 Mounted left sliding rail (rear side) 30
Figure 2.13 Remove the flange cover 31
Figure 2.14 Screwing on the library 31
Figure 2.15 Attaching the power cable 34
Figure 3.1 Home screen of the ETERNUS LT60 S2 37
Figure 3.2 Menu tree overview 39
Figure 3.3 Ultrium tape cartridge and proper barcode label placement 46
Figure 3.4 Write-protecting the Ultrium data cartridge 46
Figure 3.5 Slot numbering left magazine with mailslot 48
Figure 3.6 ETERNUS LT40 S2: Slot numbering right magazine 49
Figure 3.7 ETERNUS LT60 S2: Slot numbering right magazine 49
Figure 3.8 RMU login page 51
Figure 3.9 ETERNUS LT40 S2: Identity, Library page 52
Figure 3.10 ETERNUS LT40 S2: Identity, Drive page 52
Figure 3.11 ETERNUS LT40 S2: Identity, Network page 53
Figure 3.12 ETERNUS LT60 S2: Status, Library page 54
Figure 3.13 ETERNUS LT60 S2: Status, Drive page 54
Figure 3.14 ETERNUS LT40 S2: Status, Inventory page 55
Figure 3.15 ETERNUS LT40 S2: Configuration, System page 56
Figure 3.16 ETERNUS LT60 S2: Adding license keys 56
Figure 3.17 ETERNUS LT40 S2: Configuration, Drive page 57
Figure 3.18 ETERNUS LT40 S2: Configuration, Network page 58
Figure 3.19 Certificate generation 58
Figure 3.20 Certificate information 59
Figure 3.21 Certificate import wizard: Welcome 59
Figure 3.22 Certificate import wizard: Storage 60
Figure 3.23 Certificate import wizard: Finishing (1) 60
Figure 3.24 Certificate import wizard: Finishing (2) 60

Copyright 2018 FUJITSU LIMITED

Figure 3.25 Termination of certificate installation 61
Figure 3.26 Unchecking the warnings box 61
Figure 3.27 ETERNUS LT40 S2: Configuration, SNMP page 62
Figure 3.28 ETERNUS LT40 S2: Configuration, User page 63
Figure 3.29 ETERNUS LT40 S2: Configuration, Date/Time page 64
Figure 3.30 ETERNUS LT40 S2: Configuration, Log page 64
Figure 3.31 ETERNUS LT40 S2: Configuration, Event notification page 65
Figure 3.32 ETERNUS LT40 S2: Configuration, Restore defaults page 65
Figure 3.33 ETERNUS LT40 S2: Operations, Move Media page 66
Figure 3.34 ETERNUS LT40 S2: Operations, Inventory page 66
Figure 3.35 ETERNUS LT40 S2: Operations, Magazines page 67
Figure 3.36 ETERNUS LT40 S2: Service, General Diagnostic page 67
Figure 3.37 ETERNUS LT40 S2: Service, Drive Diagnostic page 68
Figure 3.38 ETERNUS LT40 S2: Service, Firmware page 68
Figure 3.39 ETERNUS LT40 S2: Service, Reboot page 69
Figure 3.40 ETERNUS LT40 S2: Service, Library Logs page 70
Figure 3.41 ETERNUS LT40 S2: Service, Clean Drive page 70
Figure 3.42 ETERNUS LT40 S2: Service, Cartridge Memory 71
Figure 4.1 Removing stuck tapes from slot 76
Figure 4.2 Access holes for the left and right magazine 77
Figure 4.3 Remove the left magazine 78
Figure 4.4 Media Removal information in the Library Status page (LT60 S2 example: Allowed) 79
Figure 4.5 Media Removal information in the Drive Status page (LT60 S2 example: Allowed) 79
Figure 5.1 Drive sled components of rear panel 86
Figure 5.2 Tape drive removal 87
Figure 5.3 Installing a tape drive 87
Figure 5.4 Position of the two thumbscrews 88
Figure 5.5 Library controller removal 89
Figure 5.6 Position of the three thumbscrews 90
Figure 5.7 Power supply removal 90
Figure 5.8 Replacing a redundant power supply 91
Figure 5.9 RMU login page 93
Figure 5.10 ETERNUS LT40 S2: Operations, Magazine page 94
Figure 5.11 Control keys on the front panel 96
Figure 5.12 Menu item Configuration 97
Figure 5.13 Menu item Add License Key 97
Figure 5.14 License key 98
Figure 5.15 RMU login page 99
Figure 5.16 RMU: Configuration 99
Figure 5.17 Confirmation of license key 100
Figure 5.18 Request for reboot 100
Figure 5.19 Flap with serial number 101
Figure 5.20 Serial number via RMU 102
Figure 7.1 Replacing shipping lock before transportation 104
Figure 7.2 Product label 105
Figure 7.3 Re-Packaging the library 105
Figure 8.1 WEEE symbol 106

Copyright 2018 FUJITSU LIMITED

List of Tables

Table 1.1 Front panel overview 14
Table 1.2 Inside components 19
Table 2.1 Location criteria 20
Table 3.1 Write protecting 47
Table 3.2 Slot numbering, left magazine 48
Table 3.3 Slot numbering, right magazine 49
Table 3.4 Status icons 50
Table 4.1 Troubleshooting table 73
Table 4.2 Access to manually release a magazine 77
Table 4.3 Removing the left magazine 78
Table 4.4 Error codes 81
Table 5.1 Description for Figure 5.1 86
Table 7.1 Re-Packaging description 105
Table 9.1 IEC 60297 rack standards 107

Copyright 2018 FUJITSU LIMITED

Chapter 1

Product Description and Features

The ETERNUS LT40 S2/LT60 S2 LTO Library tape library provides a compact, high-capacity, low-cost solution for simple, unattended data backup.

The ETERNUS LT40 S2 houses up to 24 tape cartridges in a compact 2U form factor with easy access to tape cartridges via two removable magazines and a mailslot for importing and exporting cartridges. The library is equipped with one or two half height LTO6, LTO7, or LTO8 tape drives or one full height tape drive.

The ETERNUS LT60 S2 houses up to 48 in a compact 4U form factor with easy access to tape cartridges via four removable magazines and a mailslot for importing and exporting cartridges. The library is equipped with up to four half height LTO6, LTO7, or LTO8 tape drives or up to two full height tape drives.

Each magazine can hold up to twelve cartridges.

The library does not occupy an own signal interface but is controlled via a separate LUN of one of the tape drives.

The library can be operated via Operator Control Panel (OCP) or Remote Management Unit (RMU).

The ETERNUS LT40 S2/LT60 S2 LTO Library is compatible with most operating systems and environments that support the SAS and Fibre Channel (FC) interface. However, the library requires either direct support from the operating system or a compatible backup application to take full advantage of its many features.

Figure 1.1 ETERNUS LT60 S2 front and rear view

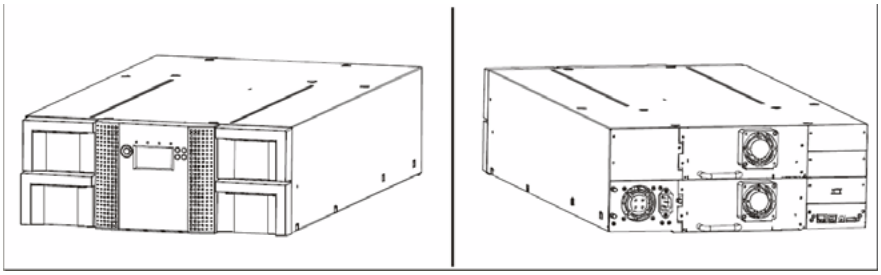

Copyright 2018 FUJITSU LIMITED

Particular emphasis of the ETERNUS LT family includes

- Platform of tape Libraries
  independent of LTO technology
- Broad level of connectivity
  - SAS
  - FC
- Expandability
  magazines and drives can be added in the field
- Technology upgrade
  customer can upgrade tape drive technologies (e. g. LTO6 to LTO7) in the field
- Service friendly design
  drive, power supply and library controller are accessible from the back of the unit allowing for quick replacement
- Best in class cartridge and drive density
  packing in as many or more cartridges in the standard rack height 4U as most other Libraries on the market
- Maximum up time
  through advanced error handling and recovery capability

The ETERNUS LT40 S2/LT60 S2 LTO Library includes the following features

- USB interface to improve serviceability and to store customer specific settings
- User friendly Operator Control Panel with simple character set
- Support of further LTO generations
- Integral Remote Management Unit
- Supports industry standard management software tools such as SNMP and SMI-S (future developments)
- Mailslot
- Robotic with barcode reader
- LTFS function (optional)

The ETERNUS LT40 S2/LT60 S2 LTO Library provides cost-effective, easy to install, automated data protection for the small to medium sized business.

Note

Not all features will be available at initial product launch and will be added upon technology availability, anticipated market requirements, and/or customer needs.

1.1 Front Panel

The front panel of the ETERNUS LT40 S2/LT60 S2 LTO Library does access to the power button, operator control panel (OCP), magazines, LED's, and the mailslot.

The Operator panel consists of an LCD display with a 128 x 64 character matrix, 4 push button switches and a power on/off button.

Copyright 2018 FUJITSU LIMITED

Figure 1.2 Front panel ETERNUS LT60 S2

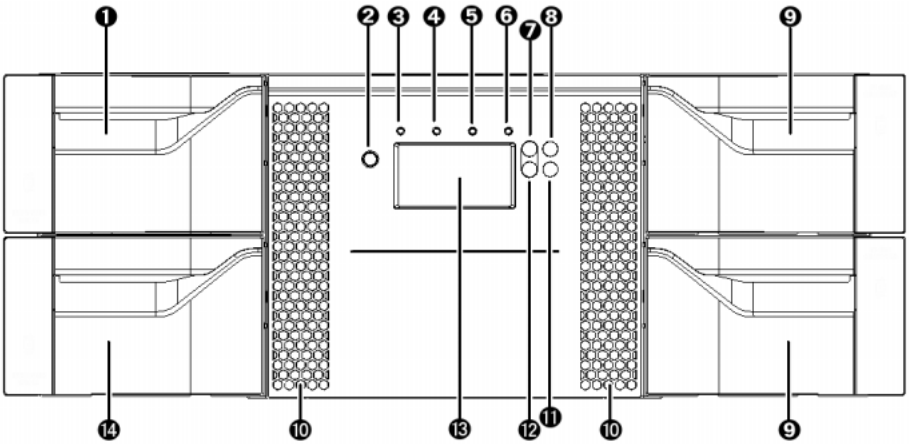

Table 1.1 Front panel overview

No.	Description
1	Left magazine
2	Power button. Pressing the button will initiate a controlled Power Down of the unit(soft power down).
3	LED "READY" (Green). Illuminated when power is on. Blinking when there is tape or library robots activity.
4	LED "CLEAN" (Amber). Illuminated when the tape drive has determined that a cleaning cartridge should be used. Cleaning is only necessary when the library directs you to do so. Additional cleaning is not necessary.
5	LED "ATTENTION" (Amber). Illuminated if the library has detected a condition that requires attention by the operator.
6	LED "ERROR" (Amber). Illuminated if an unrecoverable tape drive or library error occurs. A corresponding error message displays on the LCD screen (see for more information).
7	Control key "CANCEL" button [X]. The CANCEL button is used to cancel a user action and return to the last menu item.
8	Control key "DOWN" button [▼] The PREVIOUS button is used to navigate through menu items.
9	Right magazines
10	Air vents.
11	Control key "ENTER" button [↵]. The ENTER button to go to a sub menu or execute an action.
12	Control key "UP" button [▲] The NEXT button is used to navigate through menu items.
13	Front panel "OCP" display, consisting of 128 x 64 characters. The OCP screen displays actions and status information, menu items or error messages equivalent to the operation mode.
14	Left magazine with Mailslot.

Copyright 2018 FUJITSU LIMITED

1.2 Rear Panel

The rear panel of the tape Library provides access to SAS or FC connectors, tape drive bays, the power connector, Ethernet, serial and the USB port.

Figure 1.3 ETERNUS LT40 S2 rear panel

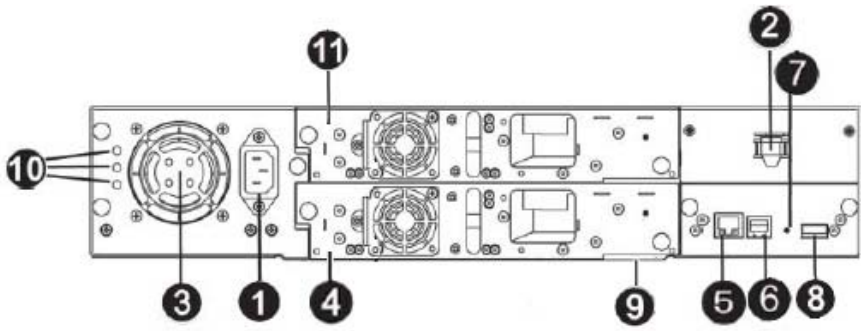

Figure 1.4 ETERNUS LT60 S2 rear panel

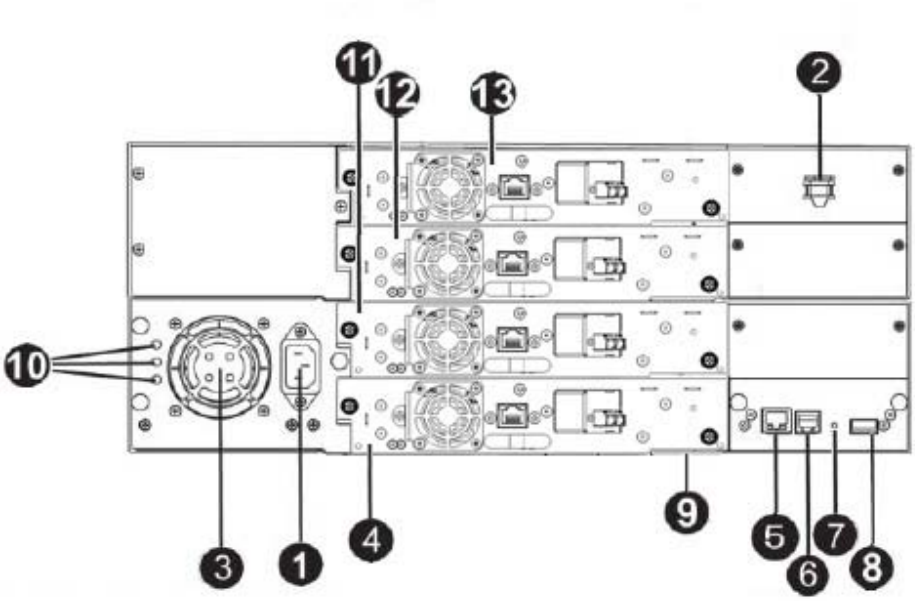

No.	Description
1	Power connector The library requires a 110/220 volt AC power connection
2	Shipping lock (storage location)
3	Fan vent
4	Tape drive sled
5	Ethernet port
6	Serial port

Copyright 2018 FUJITSU LIMITED

No.	Description
7	Controller LED
8	USB port (Host)
9	Product label foil (see "Chapter 7 Packaging Before Transportation" (page 104))
10	Power Supply LED's from top: blue LED on >> AC connected green LED on >> Power good yellow LED on >> degraded Fan
11	Tape drive sled
12	Tape drive sled
13	Tape drive sled

Figure 1.5 SAS tape drive (LTO Ultrium 5)

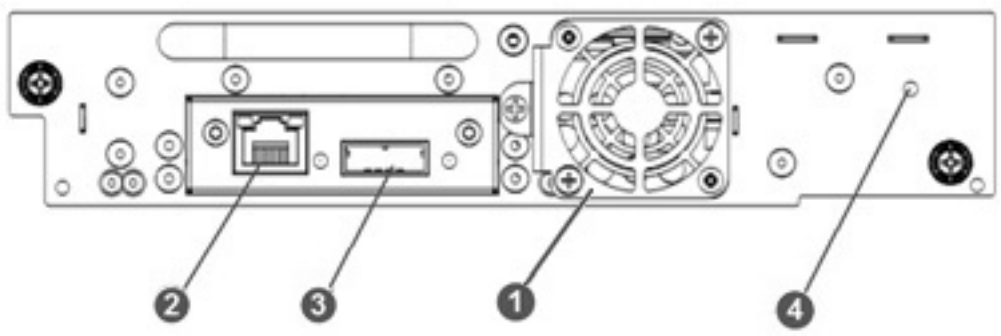

No.	Description
1	Fan vent
2	Ethernet port
3	SAS connector
4	Tape drive LED

Copyright 2018 FUJITSU LIMITED

Figure 1.6 FC tape drive (LTO Ultrium 6 with Ethernet port)

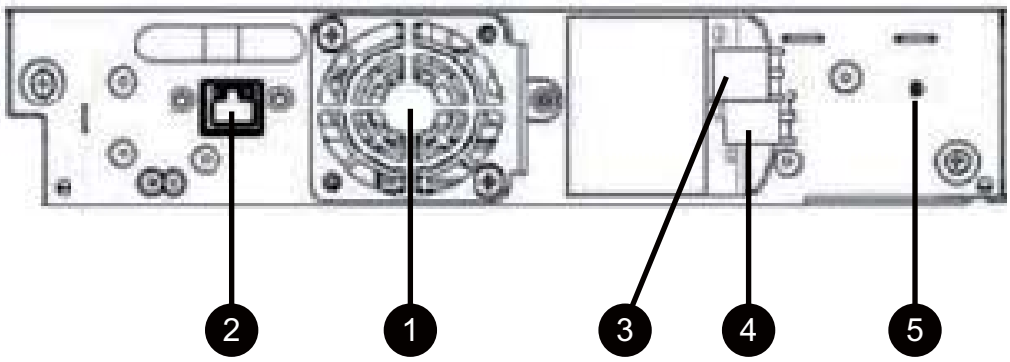

No.	Description
1	Fan vent
2	Ethernet port (unavailable)
3	FC connector (port A)
4	FC connector (port B is unavailable)
5	Tape drive LED

Figure 1.7 FC tape drive (LTO Ultrium 6, 7, 8)

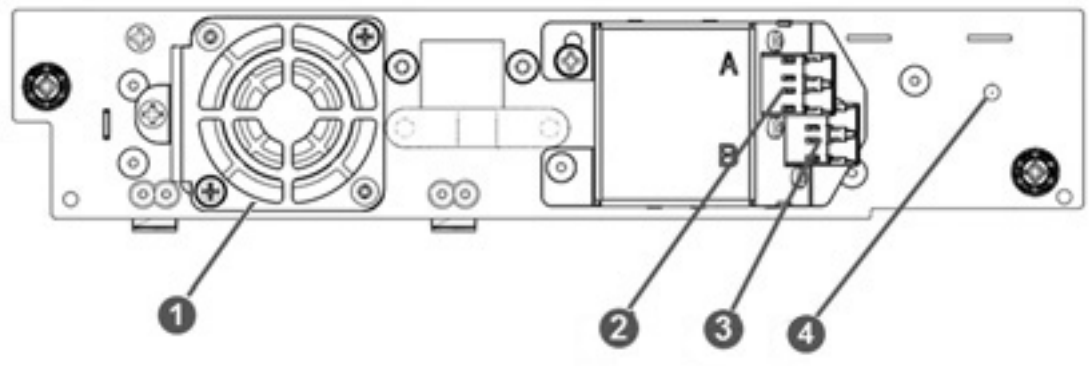

No.	Description
1	Fan vent
2	FC connector (port A)
3	FC connector (port B is unavailable)
4	Tape drive LED

Copyright 2018 FUJITSU LIMITED

Figure 1.8 SAS tape drive (LTO Ultrium 6, 7, 8)

There are two types of rear panels for the SAS interface.

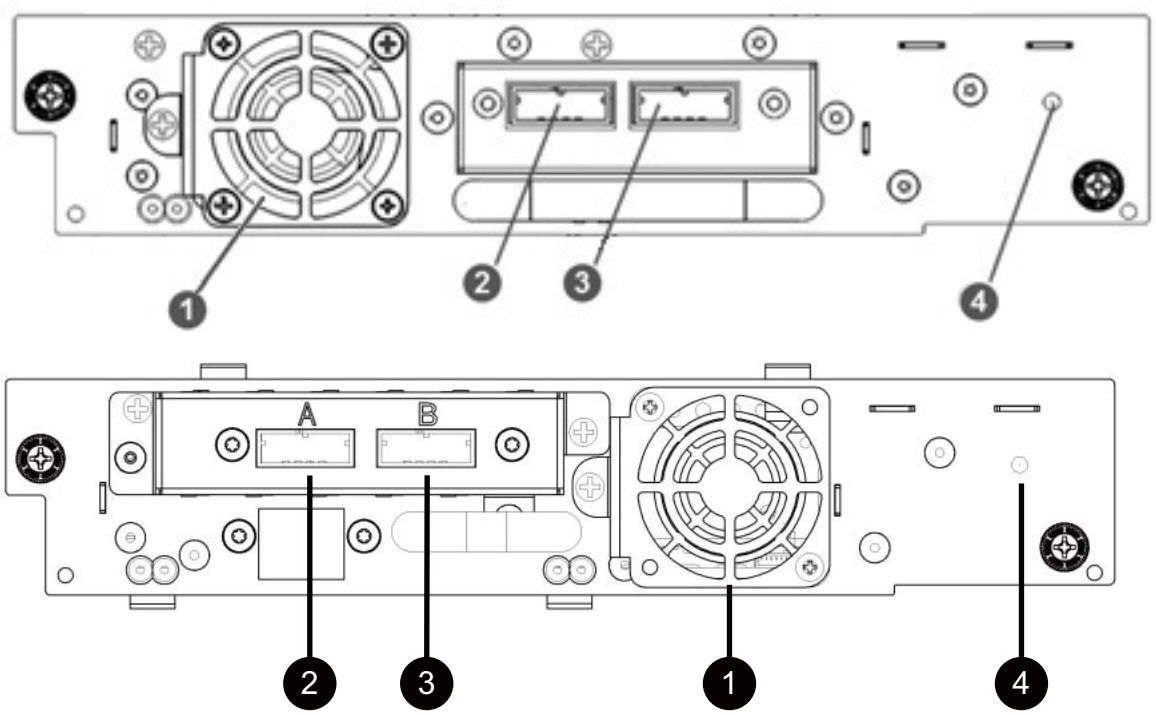

No.	Description
1	Fan vent
2	SAS connector (port A)
3	SAS connector (port B is unavailable)
4	Tape drive LED

Copyright 2018 FUJITSU LIMITED

1.3 Inside Components

Figure 1.9 Inside components

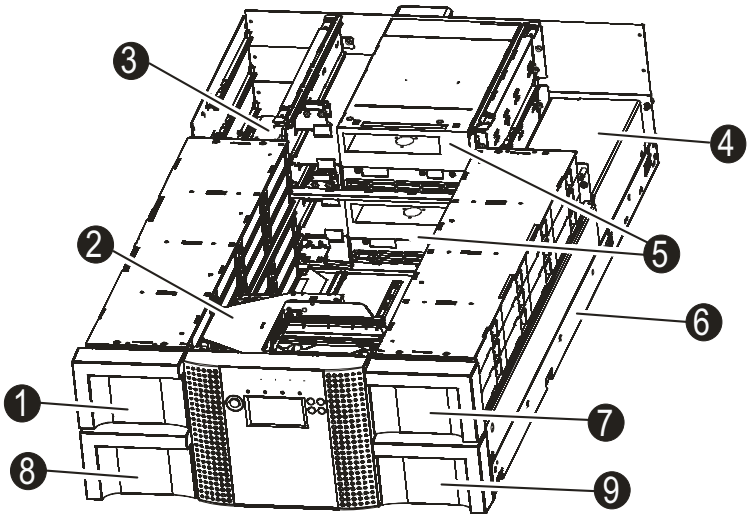

Table 1.2 Inside components

No.	Description
1	Left upper magazine
2	Robotic with barcode reader
3	Controller
4	Power supply
5	Drive sled
6	Chassis
7	Right upper magazine
8	Left lower magazine
9	Right lower magazine

Copyright 2018 FUJITSU LIMITED

Chapter 2
Installing the Tape Library

2.1 Location Requirements

Choose a location that meets the following criteria:

Table 2.1 Location criteria

Criteria	Definition	
Rack requirements	Standard 19-inch rack with 2U 4U of clearance	
Room temperature	10-35 °C (50-95 °F)	
Power source	AC power voltage	100-127 VAC 200-240 VAC
	Line frequency	50-60 Hz
	Place the library near an AC outlet. The AC power cord is the product's main AC disconnect device and must be easily accessible at all times.	
Weight without media	ETERNUS LT40 S2 with two HH drives: 16.5 kg ETERNUS LT60 S2 with four HH drives: 27 kg	
Weight with media	ETERNUS LT40 S2 with 24 cartridges: 24.2 kg ETERNUS LT60 S2 with 48 cartridges: 42.4 kg	
Air quality	The library should be placed in an area with minimal sources of particulate contamination. Avoid areas near frequently used doors and walkways, stacks of supplies that collect dust, printers, and smoke-filled rooms. Excessive dust and debris can damage tapes and tape drive.	
Humidity	20-80 percent RH non-condensing	
Clearance	Back	Minimum of 15.4 cm (6 inches)
	Front	Minimum of 30.8 cm (12 inches)-for mailslot Minimum of 60 cm to remove magazines
	Sides	Minimum of 5.08 cm (2 inches)

Copyright 2018 FUJITSU LIMITED

2.2 Unpacking the Tape Library

Before you begin, clear a work surface to unpack the library. Select an open 2U rack location allowing easy access to the host server and an easily accessible power outlet.

CAUTION

If the temperature in the room where the library will be installed varies by more than 15 °C (30 °F) from the room where the library was stored, allow the library to acclimate to the surrounding environment for at least 12 hours before unpacking it from the shipping container.

Unpacking the library:

Procedure

1. Before opening and removing the library from the shipping container, inspect the container for shipping damage. If you notice any damage, report it to the shipping company immediately.
2. Open the box and remove the two rack rails (if included) and set aside.
3. Carefully remove the shipping materials from the top of the library. Remove the accessory package and set aside.
4. Lift the library out of the carton and remove the bag from the library. Remove the foam cushion from the back of the library. Save the packaging materials for future use.

End of procedure

CAUTION

Do not place the library on either end or sides as this may damage the library.

Note

After unpacking the library, save all the original packing materials in case you need to ship or move the library later.

Copyright 2018 FUJITSU LIMITED

Figure 2.1 Unpacking the library (ETERNUS LT40 S2)

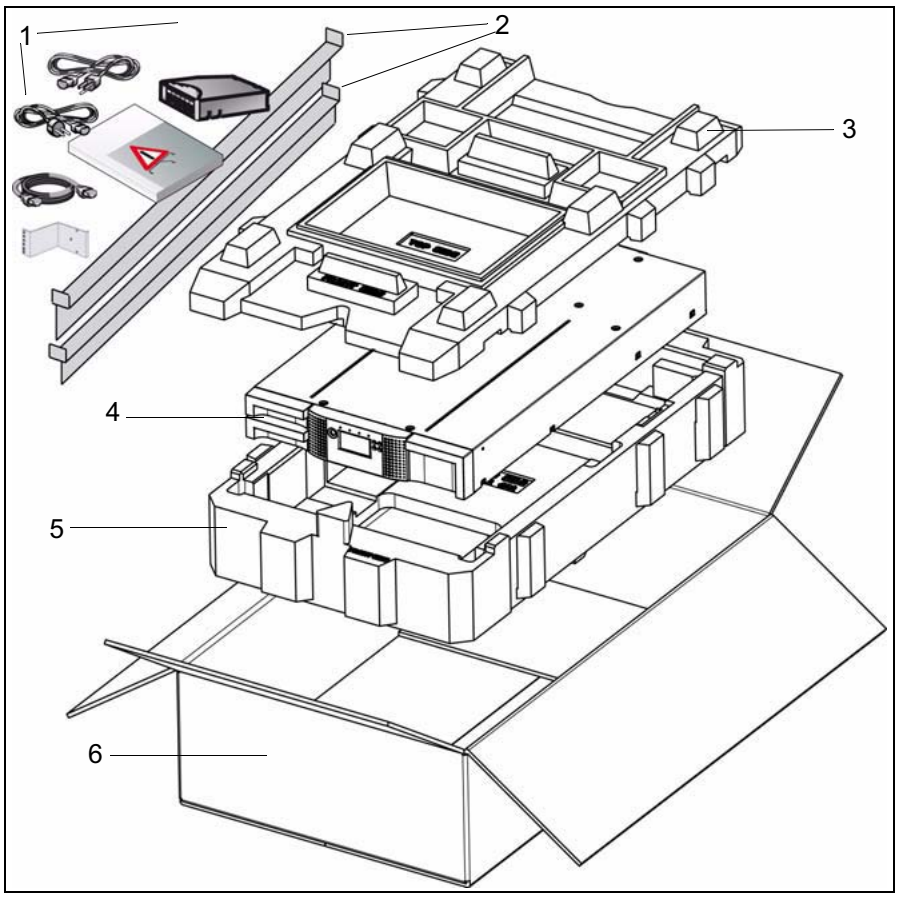

Copyright 2018 FUJITSU LIMITED

Figure 2.2 Unpacking the library (ETERNUS LT60 S2)

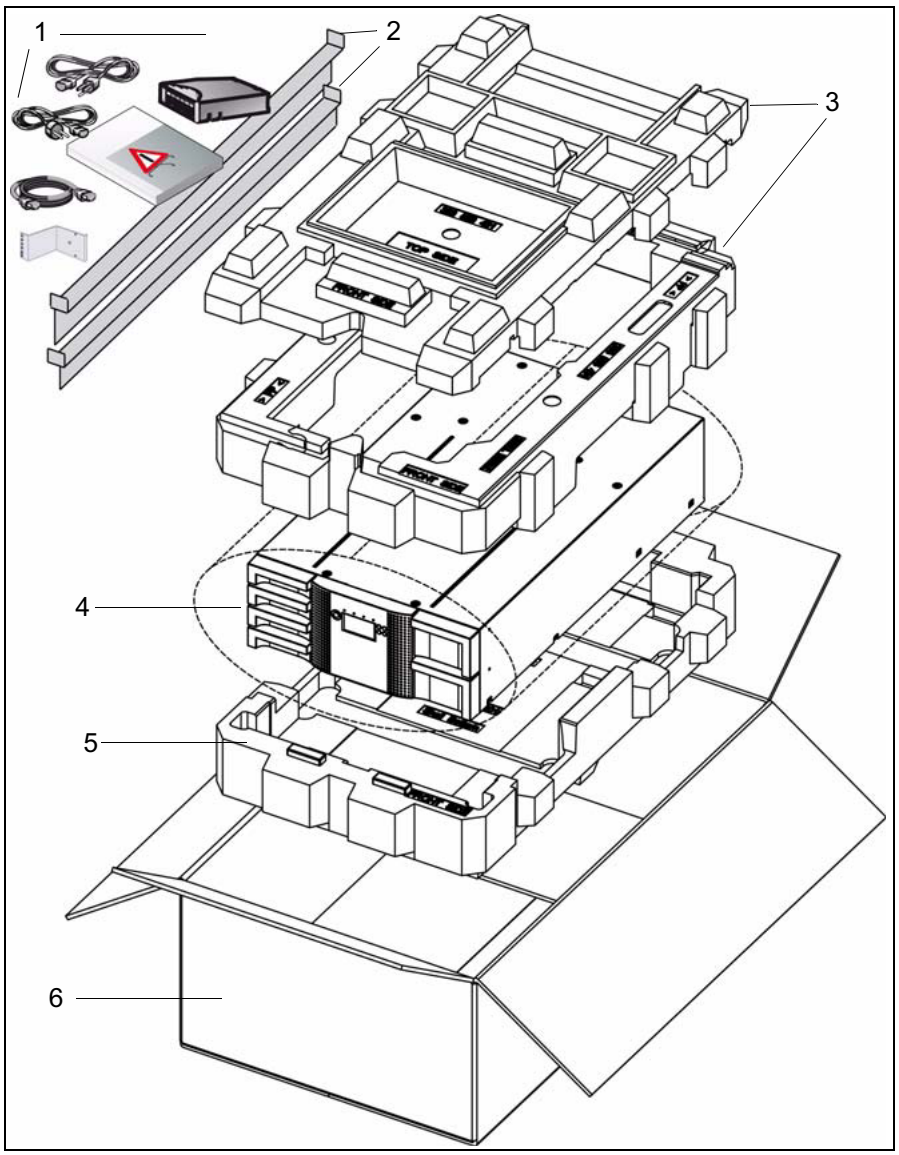

No.	Description
1	Accessories
2	Sliding rails
3	Top shell parts
4	ETERNUS LT40 S2/LT60 S2 unit
5	Bottom shell
6	Box

Copyright 2018 FUJITSU LIMITED

2.3 Identifying Product Components

Confirm that you have received the following:

- Library
- Power cord
- Read Me First and Safety Precautions
- Rack mount kit
  - 2 rack mount rails(Left, Right)
  - 1 bag of eight round hole rack screws
  - 1 bag of eight Square hole rack screws
  - 2 guide pulleys
- Cover eject bar
- 1 cleaning cartridge

2.4 Removing the Shipping Lock

Note

The shipping lock, which prevents the robotic transport mechanism from moving during shipment, must now be removed before the library is powered on.

A yellow label with instructions regarding the shipping lock covers the power button, as shown in the following picture:

Figure 2.3 Instructions for shipping lock



The shipping lock is held in place with a label and is located in the top center of the library. After the shipping lock is removed, it should be stored on the rear panel right side of the library for future use.

Copyright 2018 FUJITSU LIMITED

To remove and store the shipping lock:

Procedure

1 Remove the yellow label that is securing the lock to the top of the library, and then remove the lock (see Figure 2.4).

Figure 2.4 Shipping lock and label

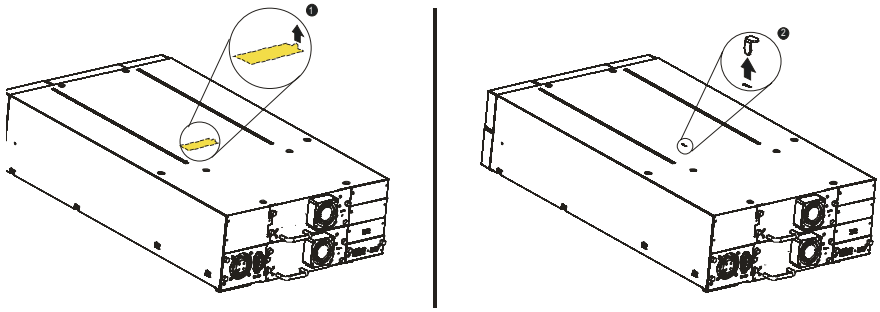

2 Store the lock and label on the rear panel of the library (see Figure 2.5).

Figure 2.5 Shipping lock and label on the rear panel

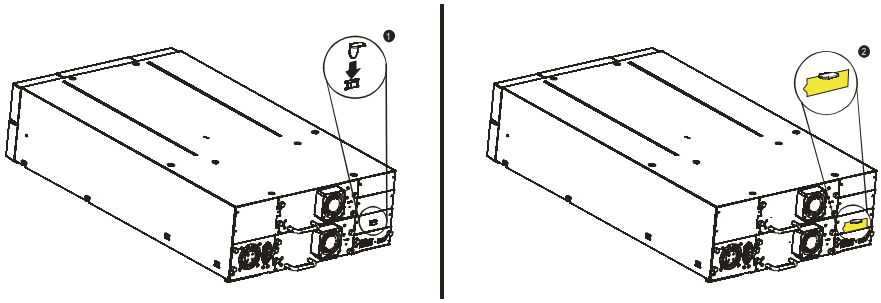

End of procedure

Note

If you need to transport the library, we recommend that the shipping lock and label is replaced on the top cover (see "Chapter 7 Packaging Before Transportation" (page 104)).

Copyright 2018 FUJITSU LIMITED

2.5 Rack Mounting the Library

WARNING

Weight!
Risk of personal injury or damage to the loader.

- Always remove all tapes to reduce the overall weight of the loader.
- Obtain adequate assistance to lift and stabilize the library during installation or removal.
- Observe local health and safety requirements and guidelines for manual material handling.

2.5.1 Preparing

Before installing the library:

- Make sure that the host bus adapter card installed in the host computer, any necessary device drivers, and your backup software are compatible with the library. Make certain that an any necessary drivers installed in the host computer are compatible with the tape drive in a library.
- You can install the software on the host computer before or after library installation. However, if you install the software first, you may need to reconfigure it for use with the library after library installation is complete.
- The library must be operated in the horizontal position. Do not place the library on its side, and do not place objects on top of the library.

CAUTION

Before performing any installation or maintenance procedures, be sure that the library power switch is in the off position and that the power cord is disconnected from the library and the outlet.

Copyright 2018 FUJITSU LIMITED

2.5.2 Installing the Library in a Rack

The library easily installs into a standard 19" rack system taking up 2 or 4U of space.

Required tools

- #3 Phillips screwdriver or
- T10 Torx screwdriver

There are two sets of eight M6 screws in the accessory package that came with your library. The type of rack that you have will determine the type of M6 screw that you will use.

Different Rackmount Kits

Note that there are 3 different rackmount rails:

Figure 2.6 3 different rackmount rails

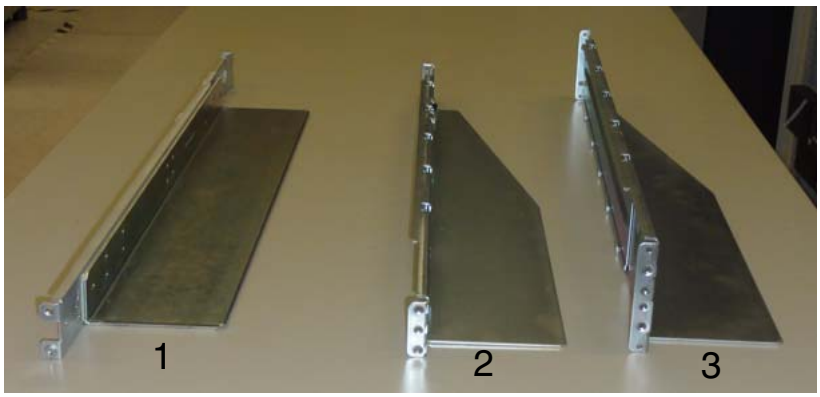

No.	Rackmount rail	Description
1	PRIMECENTER rackmount rail for ETERNUS LT20 S2/LT40 S2/LT60 S2	A Torx screwdriver is requested. A counternut is entered in the 2. hole in the ETERNUS LT20 S2 rack or in the 4. hole in the ETERNUS LT40 S2/LT60 S2 rack.
2	PRIMECENTER M1 rackmount rail for ETERNUS LT20 S2	The counternuts are already integrated, the screws are fixed with the help of a Phillips screwdriver.
3	PRIMECENTER M1 rackmount rail for ETERNUS LT40 S2/LT60 S2	The counternuts are already integrated, the screws are fixed with the help of a Phillips screwdriver in the 4. hole.

Copyright 2018 FUJITSU LIMITED

Installing the Library

Procedure

1 If you use a Fujitsu Technology Solutions PRIMECENTER rack you first have to mount the support bracket in the appropriate height to the - seen from the front of the rack - left rear rack post as shown below.

Figure 2.7 Mounted support bracket

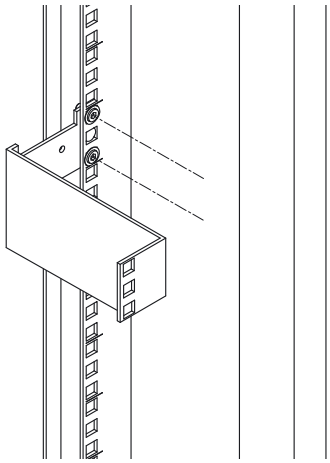

2 Mount a cage nut at the appropriate height to the right and left rack post each. Mount them in the middle square hole of the height unit in which you mounted the support bracket. (The middle of a height unit is the hole between two wide and neighboring division bars.)

Figure 2.8 Mounting cage nuts at the front of the rack (PRIMECENTER rackmount rail)



3 Place the right rail (support angle down) from the front into the rack, putting the positioning tappet into the appropriate hole of the right rear rack post.

Copyright 2018 FUJITSU LIMITED

4 Compress the spring mounted rail to its length, putting the preloaded screw head in the lower front lug of the rail from behind into the appropriate hole of the right front rack post as shown below.

The rail now is positioned between the two rack posts by its spring pressure. Support the rail with one hand.

Figure 2.9 Setting in the right rail at the front



5 Screw on the upper lug of the front rail end to the right front rack post using one screw with centering washer as shown below.

Figure 2.10 Screwing on the right rail at the front



Copyright 2018 FUJITSU LIMITED

6 Then fasten the rail on the rear side with two screws with centering washers as shown below.

Figure 2.11 Mounted right sliding rail (rear side)

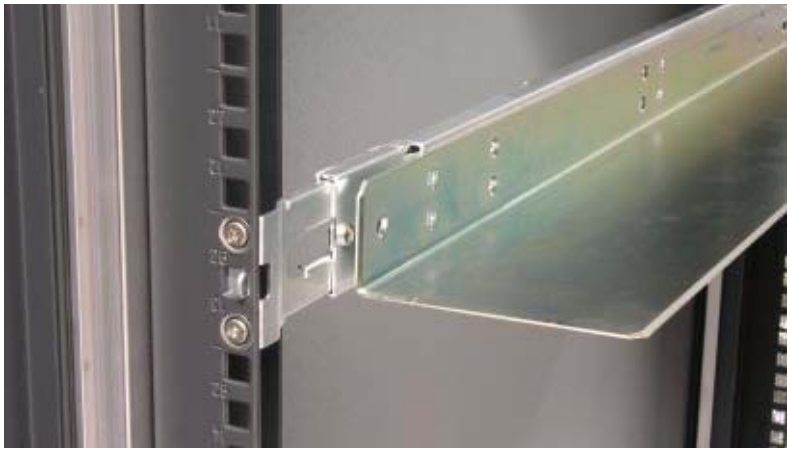

7 Mount the left rail in the same way:

- In PRIMECENTER racks, put the positioning tappet of the left rail into the appropriate hole of the support bracket which you have mounted on the left rear rack post.
- Compress the spring mounted rail to its length, putting the preloaded screw head in the lower front lug of the rail from behind into the appropriate hole of the left front rack post.
- Screw on the upper lug of the front rail end to the left front rack post with one screw with centering washer.
- Screw on the rear rail end to support bracket with two screws with centering washers as shown below.

Figure 2.12 Mounted left sliding rail (rear side)



⚠ CAUTION

The library weighs 16.5 kg (ETERNUS LT40 S2) / 27 kg (ETERNUS LT60 S2) (without media). Most of the weight is toward the back of the library.

Copyright 2018 FUJITSU LIMITED

8 Put the library from the front of the rack on the support angles of the sliding rails and push it into the rack to the back stop.

9 Remove the flange cover on the left hand side.

Figure 2.13 Remove the flange cover



10 Screw on the library at the front to the inserted cage nuts as shown below.

Figure 2.14 Screwing on the library

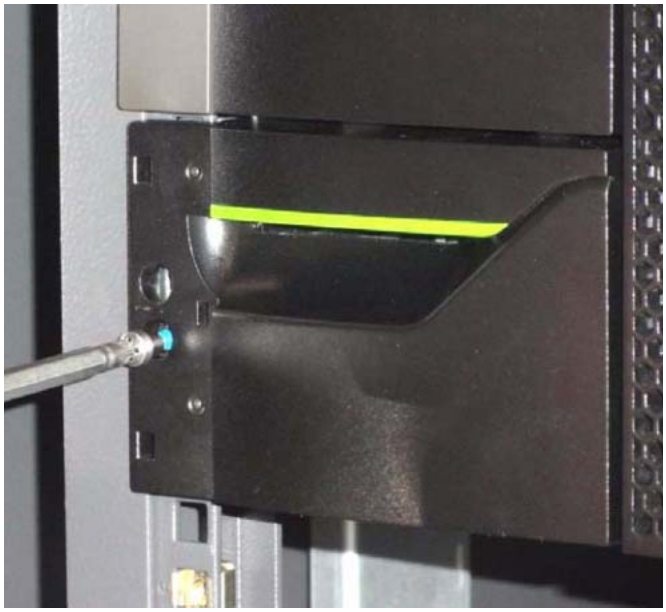

End of procedure

Copyright 2018 FUJITSU LIMITED

2.6 Connecting

2.6.1 Connection Recommendations and Additional Remarks

The effectively achievable data throughput of tape drives depends on a multiplicity of factors. These primarily are:

- Specified data throughput on the system bus (e.g. the PCI bus)
- Number of host bus adapters (controllers) on the system bus
- Origin of data to be stored (e.g. RAID system, single hard disk drives)
- Transmission type and speed of the data to be stored (e.g. Ethernet)
- Number of devices at the host bus adapter (controller)
- Sequential or parallel operation of the tape drives
- Compressed or uncompressed operation of the tape drives

2.6.1.1 FC

FC allows for an active intelligent interconnection scheme, called a Fabric, to connect devices. Everything between the ports on FC is called the Fabric. The Fabric is most often a switch or series of switches that takes the responsibility for routing.

2.6.1.2 SAS

SAS features

- Serial data transfer to and from storage devices as disk and tape drives
- 4 SAS channels per SAS HBA port (typical, not mandatory) for a maximum of 4 storage devices per HBA port
- Unique identifying of a SAS drive by its WWN (World Wide Name) or WWID (World Wide Identifier)

Host Bus Adapter

The HBA has to meet following requirements:

- External SAS connector
- Multiple LUN support (most SAS RAID controllers do not support multiple LUNs). Consult your sales representative or a certified service engineer for compatibility of HBA, library and your server.

SAS Cable

- The SAS signal cable supplied with the ETERNUS LT40 S2 has at its drive side 2 connectors for connecting a maximum of 2 SAS drives. Connect the plug marked "P1a" to the lower drive. Connect the plug marked "P1b" to the upper drive, if installed.

Copyright 2018 FUJITSU LIMITED

CAUTION

- Do not force a SAS cable's mini-SAS connector into the tape drive's mini-SAS connector because it might be (mechanically) keyed differently.
- Fujitsu recommends a maximum SAS cable length of 4 meters from HBA to one tape drive.
- Do not use any adapter or converter between HBA and tape drive(s).

2.6.1.3 Preparing the Host

CAUTION

Use proper procedures to prevent electrostatic discharge (ESD, wrist-grounding straps and anti-static mats when handling internal components).

Follow these general guidelines:

- Make sure that your backup application supports the host bus adapter communicating with the library.
- If the host server is connected to a network, check with the system administrator before turning off power.
- Install a suitably rated HBA.
- Make sure that LUN scanning is enabled on the HBA.
- When the host server is powered on, install the software and/or driver(s) that are compatible with the library. Backup software packages may require additional software or licensing to communicate with the library robotics.

2.6.2 Power and Signal Cable

WARNING

Use approved power cords! Not doing so can result in the following:

- not meeting individual country specific safety requirements;
- insufficient conductor amp city that could result in overheating with potential personal injury and/or property damage;
- an unapproved power cord could fracture resulting in the internal contacts being exposed, which potentially could subject the user to a shock hazard.

Manufacturer disclaims all liability in the event a non-manufacturer approved power cord is used.

CAUTION

Failure to remove the power cables from these devices could result in damage to the library.

To connect the power and signal cable to the tape library:

Procedure

1 Shut down and turn off the selected server. Turn off all attached devices, such as printers and other devices. Remove the power cables from the server and all attached accessories.

Copyright 2018 FUJITSU LIMITED

2 Attach one end of the signal cable
- to the SAS connector of a SAS tape drive.
- to the FC connector of a FC tape drive.

3 Attach the other end of the signal cable
- in a SAS configuration to the SAS HBA or a SAS expander.
- in a FC configuration to the FC HBA, an FC hub, an FC device with two I/O ports or an FC switch.

4 Attach the power cable to the power connector on the back panel of the Library (see Figure 2.15).

5 Plug the power cable into the nearest properly grounded power outlet.

Figure 2.15 Attaching the power cable

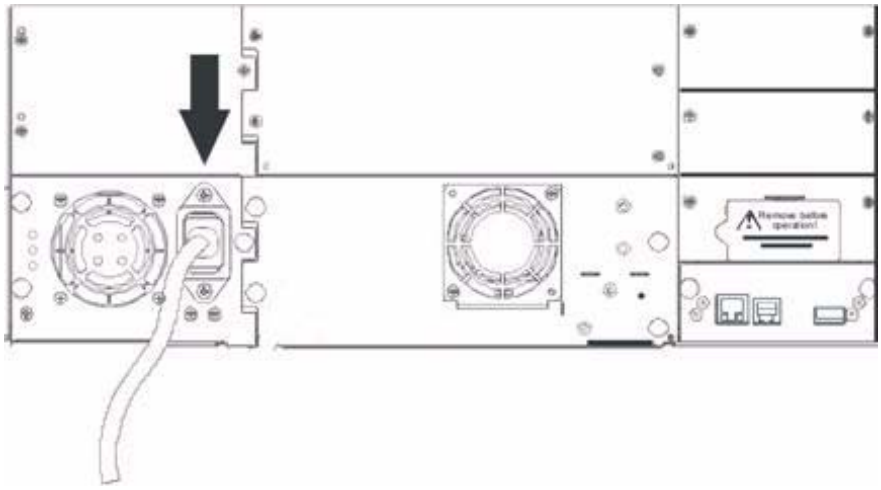

CAUTION

To disconnect all power from the library, remove the power cord from the outlet. The power button only puts the power on stand-by.

6 Turn on the library using the power button. Check the LCD screen to make sure the library is receiving power. If it is not, check the power connections and your power source. During the Power-On-Self-Test (POST), all four LEDs are illuminated briefly, followed by a flashing Ready LED. When the initialization sequence is complete, the Home screen will be displayed.

7 Plug in the host server or workstation and all attached devices.

8 Turn on any other devices you turned off earlier.

9 Turn on the server.

End of procedure

Copyright 2018 FUJITSU LIMITED

2.6.3 Verifying the Detection of the Library Under Windows

- When the host server is switched on, install the software and/or the drivers compatible with the library. Backup software packages may require additional software or licensing to communicate with the library.
- Confirm the host server's operating system recognized the library in Windows Server 2012 R2 or Windows Server 2016 by going to:
  Settings → *Control Panel* → *System* → *Hardware* → *Device Manager* → *Tape Drive* and/or *Media Changer*.

For more information on verifying the connection of devices, consult the operating system documentation.

Copyright 2018 FUJITSU LIMITED

Chapter 3

Operating the Tape Library

3.1 Operator Control Panel (OCP)

There are 2 basic modes that the OCP operates in. First is the User Interaction mode. This mode is employed when a user is pushing buttons on the OCP. The second mode is the System Driven mode. This is the normal mode of operation. In this mode, the OCP displays status associated with the actions that were caused from commands issued via the Drive's serial interface. Actions like Loading, Rewinding or Moving tape will be displayed. When an OCP button is pressed and released, the OCP automatically transitions to User Interaction mode. User Interaction mode will continue until 3 minutes after a user stops pushing buttons, or the requested robotic action stops -whichever is longer. At this time the OCP will return to System driven mode.

In case of activated User security feature the User Interaction Mode is restricted to the Information and Login menu item, until a login with correct PIN is done.

3.1.1 OCP Philosophy

OCP operation must obey some basic rules. These rules of operation constitute a 'philosophy'.

- Any operational conflict between commands received over RMU and those entered via the front panel will be avoided with a reservation mechanism on a 'first-come, first-served' basis. Any reservation by OCP is canceled by an OCP logout or the timeout, which cancels the User Interaction Mode.
- Library firmware will not allow a user to select an impossible request. Those situations will include, but are not limited to:
  - Moving a cartridge from any source to a full slot
  - Moving a cartridge from an empty slot
  - Loading a cartridge from any source to a full drive
  - Unloading a cartridge from an empty drive
- Any error detected by the library or drive controller and not recoverable through predetermined firmware algorithms will be considered as fatal. An error code will be displayed on the LCD and the error LED will become illuminated. The error code will remain on the OCP until a push button is pressed, which will cause the OCP to return to the Home Screen.
- Text status messages are provided with numeric error codes used for unrecoverable, fatal errors.

Copyright 2018 FUJITSU LIMITED

3.1.2 Power-Up Display

When the ETERNUS LT40 S2/LT60 S2 LTO Library device powers up, or resets, it goes through several internally controlled processes that allows it to get initialized and running. These processes are called Power-On-Self-Test (POST). While the POST is happening, the OCP shall have appropriate information displayed to keep the user informed. When the loader finishes coming alive, it will display the current device status for a defined time or until a key is pressed.

After this initial status screen the home screen will be shown until a key is pressed. This home screen shows the overall health of the loader, indicating the status of the robotic and the connected drives.

Figure 3.1 Home screen of the ETERNUS LT60 S2



3.1.3 Note about the LEDs

All LEDs are updated during Power Up and Reset sequences. Upon power up or software Reset, the loader will illuminate all LEDs as soon as POST allows. This will help the User to verify if all LEDs are functional. When initialization starts, all LEDs will be extinguished and the Ready/Activity LED will flash at a reasonable rate of approximately 1-second per cycle, 50% duty cycle. When the mechanical initialization is complete, the Ready/Activity LED will stop flashing and be constantly illuminated.

If a loader failure occurs, the Ready/Activity LED will be turned off and the Error LED will be illuminated. The OCP will also display an appropriate error code to help identify the failure.

3.1.4 Input Modes

There are several modes to enter values in the different menu items. These values are: selectable predefined values, toggle values (e.g. On/Off) and numerical values such as network addresses.

3.1.4.1 Selectable Predefined Values

After navigating to the menu item the various predefined values can be selected with the NEXT and PREVIOUS button. As soon as the display shows the correct value it may be confirmed by pressing the ENTER button.

Copyright 2018 FUJITSU LIMITED

3.1.4.2 Toggle Values

Toggle values are used to switch between two different states like On and Off. After navigating to the menu item the display shows the actual state. Pressing the ENTER button will toggle to the possible new state. Pressing ENTER a second time will take over this new state.

3.1.4.3 Numerical Values

Numerical values are needed for network addresses, PIN entries, and other configuration entries. After navigating to the menu item to be changed, the actual value will be displayed and the cursor stays on the first digit. The value may be incremented / decremented with the NEXT and PREVIOUS button. After pressing the ENTER button the cursor is set to the next editable digit. It can be changed in the same way. After pressing the ENTER button at the last digit the complete entry will be stored. Pressing the CANCEL button will cancel the whole edit process and the old value is valid again.

3.1.5 Power ON/OFF

Part of the Operator Control Panel is the Power On/Off button. Pressing this button will initiate a controlled Power Down of the unit (soft landing). The following operations will take place before the unit shuts down completely:

- The display indicates with an appropriate message that the shutdown is in progress
- The library controller finishes all ongoing loader and drive activities
- The robotics is moved to its home position
- The library controller switches off the power supply's secondary side
- To abort the shutdown process the user has to press Cancel within the first 3 seconds

Note

The shutdown process may be aborted by pressing Cancel within the first 3 seconds.

Copyright 2018 FUJITSU LIMITED

3.1.6 OCP Menu Flow Charts

Figure 3.2 Menu tree overview

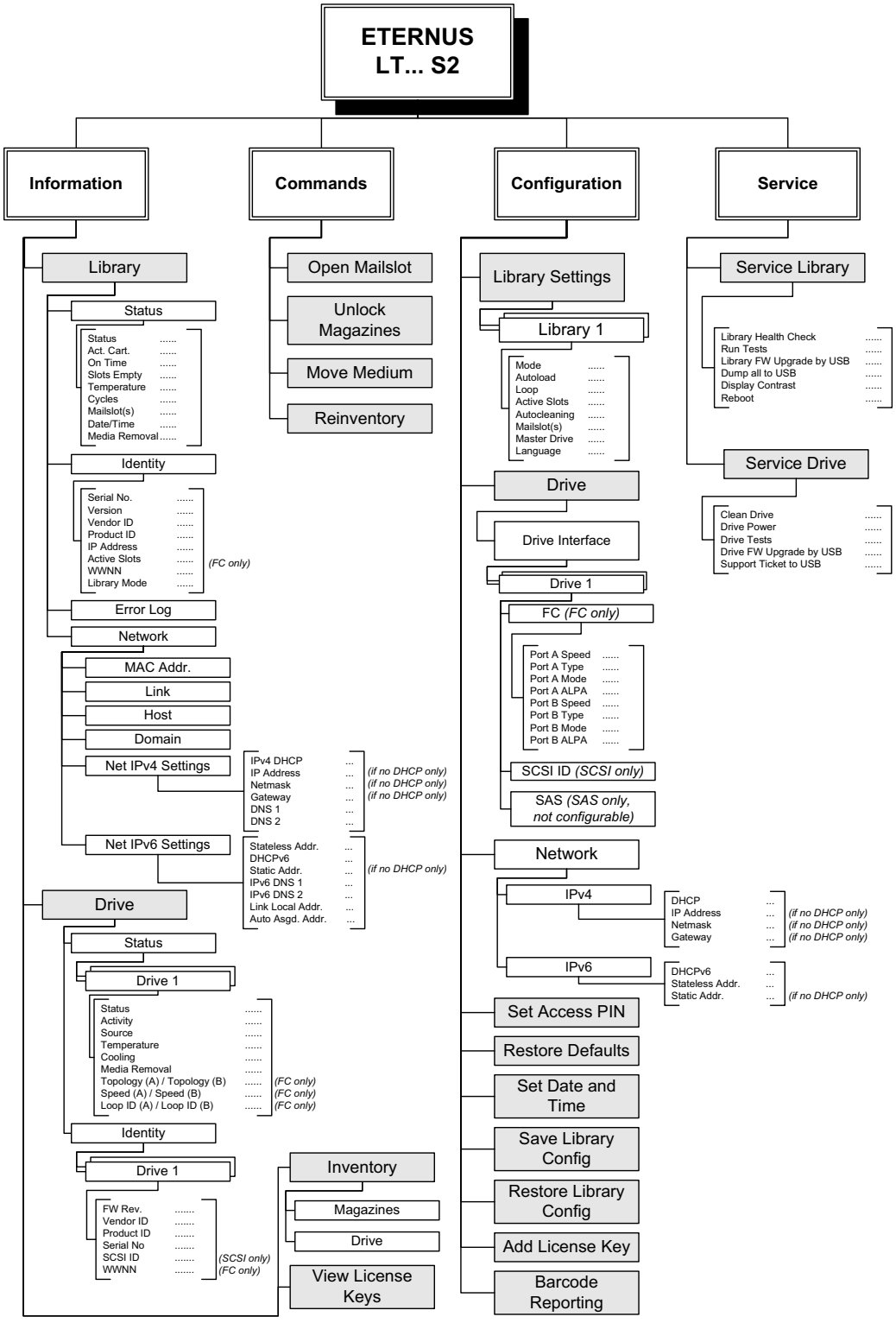

Copyright 2018 FUJITSU LIMITED

3.2 Partitioning the Library

3.2.1 ETERNUS LT40 S2

Depending on the height, the number of drives and used drive types it's possible to create up to 4 logical libraries (partitions). The logical libraries are magazine related, this means the number of available slots are aligned to the magazine borders.

When two half-high drives are installed in a 2U library, the library firmware will support partitioning in the same way that the 4U supports partitioning with two full-high drives today. The first partition will contain the first magazine and the first drive. The second partition will contain the second magazine and the second drive. The mailslot (if configured) will be shared between the logical libraries.

3.2.1.1 Drive Naming ETERNUS LT40 S2

The first half-high drive position will be called "Drive 1", the second half-high drive position will be called "Drive 2".

3.2.1.2 Mixing of Drives ETERNUS LT40 S2

The 2U library will support a mix of drives from different generations (LTO5, LTO6, LTO7) in the same physical library and the same logical library. They will also support a mix of SAS and FC in the same physical library and the same logical library.
A single logical library must be configured with drives from one of the Product ID groups described below.
If the current configuration includes drives from both groups, configure multiple logical libraries and allocate the drives from each group to separate logical libraries.

- Product ID group A: LTS2Z225E/L, LTS2Z226L, LTS2Z234L, LTS2Z235E/L, LTS2Z236L, LTS2Z125E/L, LTS2Z135E/L
- Product ID group B: LTS2Z246E/L, LTS2Z247E/L, LTS2Z256E/L, LTS2Z257E/L

3.2.1.3 Configuration of a 1-Partition-System

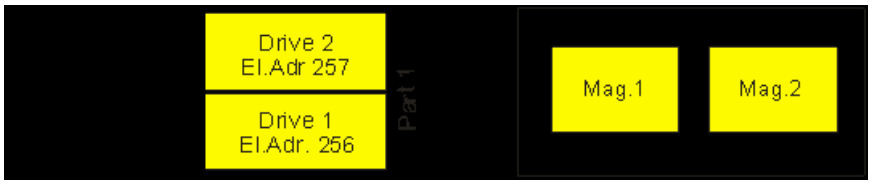

Showing drive numbers, element addresses and correlated magazines (same color)

Copyright 2018 FUJITSU LIMITED

3.2.1.4 Configuration of a 2-Partition-System

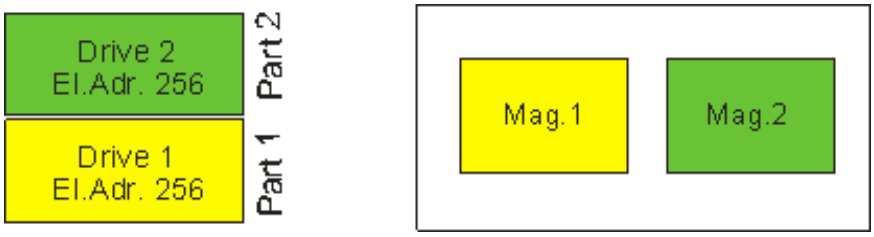

Showing drive numbers, element addresses and correlated magazines (same color)

3.2.2 ETERNUS LT60 S2

Depending on the height, the number of drives and used drive types it's possible to create up to 4 logical libraries (partitions). The logical libraries are magazine related, this means the number of available slots are aligned to the magazine borders.

When two half-high drives are installed in a 2U library, the first partition will contain the first magazine and the first drive. The second partition will contain the second magazine and the second drive. The mailslots (if configured) will be shared between the logical libraries.

3.2.2.1 Drive Naming ETERNUS LT60 S2

When one or more half-high drives are added to a 4U library, the first half-high drive position will be called "Drive 1". The second half-high drive position will be called "Drive 2". The third half-high drive position will be called "Drive 3". The fourth half-high drive position will be called "Drive 4".

3.2.2.2 Mixing of Drives ETERNUS LT60 S2

The 4U library will support a mix of drives from different generations (LTO5, LTO6, LTO7) in the same physical library and the same logical library. They will also support a mix of SAS and FC in the same physical library and the same logical library.
A single logical library must be configured with drives from one of the Product ID groups described below.
If the current configuration includes drives from both groups, configure multiple logical libraries and allocate the drives from each group to separate logical libraries.

- Product ID group A: LTS2Z225E/L, LTS2Z226L, LTS2Z234L, LTS2Z235E/L, LTS2Z236L, LTS2Z125E/L, LTS2Z135E/L
- Product ID group B: LTS2Z246E/L, LTS2Z247E/L, LTS2Z256E/L, LTS2Z257E/L

Copyright 2018 FUJITSU LIMITED

3.2.2.3 Configuration of a 1-Partition-System

Contains any drives present in any drive positions, and it will contain all four magazines. This is not different than today.

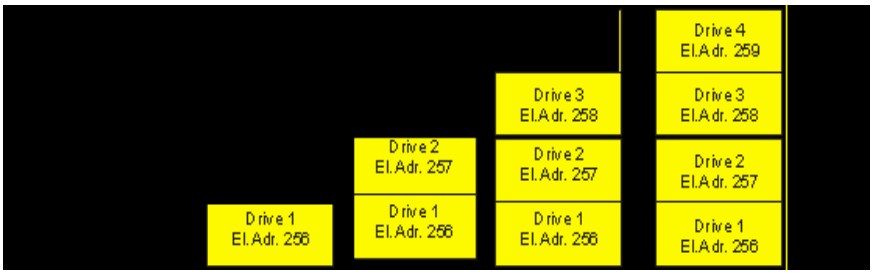

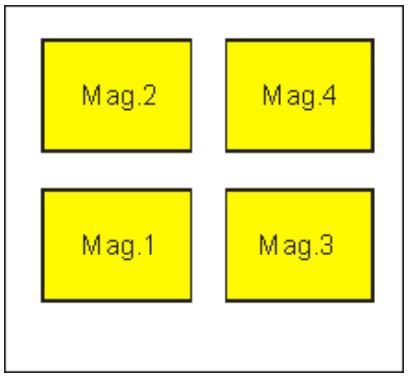

Showing drive numbers (1,2,3,4), element addresses (El.Adr.) and correlated magazines (same color)

Copyright 2018 FUJITSU LIMITED

3.2.2.4 Configuration of a 2-Partition-System

Must have at least two drives installed. One drive must be installed in either drive position 1 or drive position 2, and another drive must be installed in either drive position 3 or drive position 4. Partition 1 will contain any drives in drive position 1 and drive position 2. Partition 1 will also contain magazine 1 and magazine 2. Partition 2 will contain any drives in drive position 3 and drive position 4. Partition 2 will also contain magazine 3 and magazine 4.

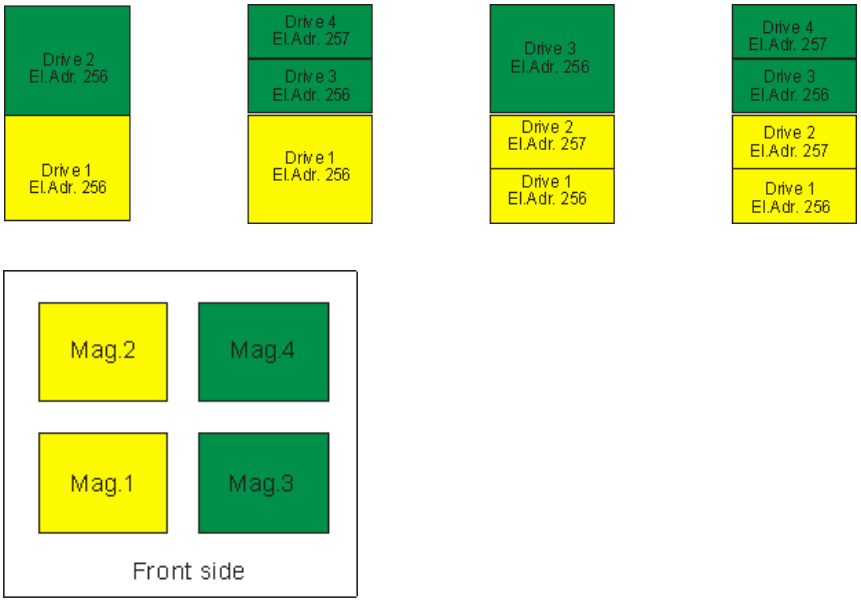

Showing drive numbers (1,2,3,4) element addresses (El.Adr.) and correlated magazines (same color)

3.2.2.5 Configuration of a 3-Partition-System

Must have at least three drives installed. A drive must be installed in drive position 1, another drive must be installed in drive position 2, and another drive must be installed in either drive position 3 or drive position 4. Partition 1 will contain the first drive and the first magazine. Partition 2 will contain the second drive and the second magazine. Partition 3 will contain any drives in drive position 3 and drive position 4. Partition 3 will also contain magazine 3 and magazine 4.

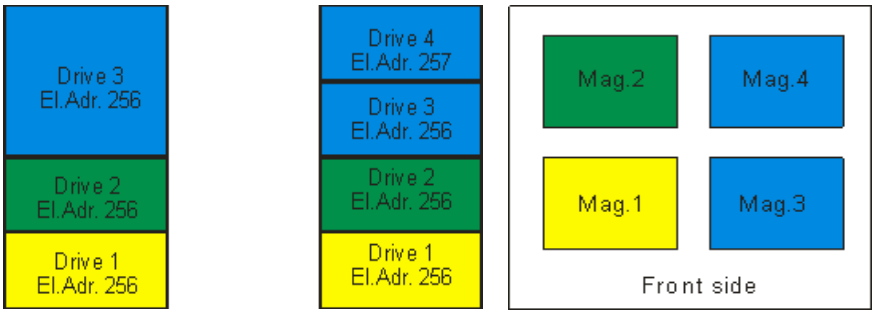

Showing drive numbers (1, 2, 3, 4) element addresses (El.Adr.) and correlated magazines (same color).

Copyright 2018 FUJITSU LIMITED

3.2.2.6 Configuration of a 4-Partition-System

Must have four drives. Each partition will contain one drive and one magazine.

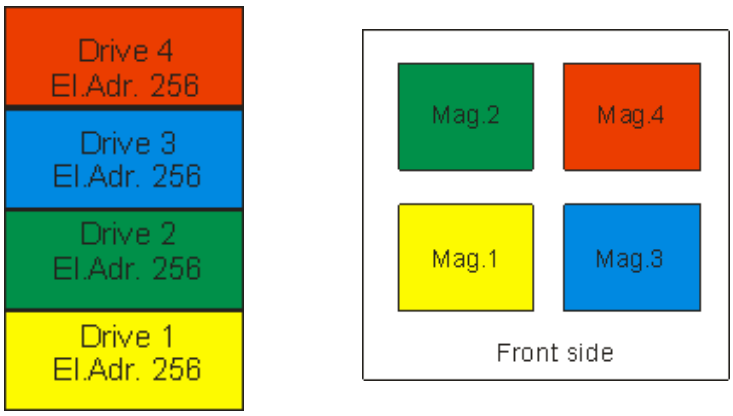

Showing drive numbers (1, 2, 3, 4) element addresses (El.Adr.) and correlated magazines (same color)

3.3 Tape Cartridges

Before you begin using the library, an understanding of the media type, use, maintenance, and how to properly label and write-protect your tape cartridges will help you to prolong the life of your tape cartridges as well as the tape library.

3.3.1 ETERNUS LT40 S2/LT60 S2 LTO Library Tape Library Cartridge Type

The cartridge types supported depends on the drive types installed. The loader will support any type of data cartridge and cleaning cartridge the drive(s) will support.

Note

Some tape drives include support for both rewritable and WORM data cartridges. Write-Once, Read-Many (WORM) data cartridges provide an enhanced level of data security against accidental or malicious alteration of data on the tape cartridge. The WORM data cartridge can be appended to maximize the full capacity of the tape cartridge, but the user will be unable to erase or overwrite data on the cartridge.

Copyright 2018 FUJITSU LIMITED

3.3.2 Using and Maintaining Tape Cartridges

Do not degauss Ultrium LTO data cartridges! These data cartridges are prerecorded with a magnetic servo signal. This signal is required in order to use the cartridge with Ultrium LTO tape drives. Keep Ultrium LTO cartridges apart from strong magnetic fields.

Before you use the library to ensure the longest possible life for your data cartridges, follow these guidelines:

- Use only the data cartridges that are designated for your model of library.
- Clean the tape drive when the Clean Drive LED is illuminated. Be sure to use only Ultrium Universal cleaning cartridges.
- Do not drop a cartridge. Excessive shock can damage the internal contents of the cartridge, or the cartridge case itself, making that cartridge unusable.
- Do not expose your data cartridges to direct sunlight or sources of heat, including portable heaters and heating ducts.
- The operating temperature range for your data cartridges is 10 to 35°C. The storage temperature range is -40 to +60°C in a dust-free environment in which relative humidity is always between 20 percent and 80 percent (noncondensing).
- If the data cartridge has been exposed to temperatures outside the ranges specified above, stabilize the cartridge at room temperature for the same amount of time it was exposed to extreme temperatures or 24 hours, whichever is less.
- Do not place data cartridges near sources of electromagnetic energy or strong magnetic fields such as computer monitors, electric motors, speakers, or X-ray equipment. Exposure to electromagnetic energy or magnetic fields can destroy data and the embedded servo code written on the media by the cartridge manufacturer, which can render the cartridge unusable.
- Place identification labels only in the designated area on the cartridge.

3.3.3 Labeling Tape Cartridges

Attaching a barcode label to each tape cartridge enables the library and application software to identify the cartridge quickly, thereby speeding up inventory time. Make it a practice to use barcode labels on your tape cartridges. Your host software may need to keep track of the following information via the associated barcode:

- Date of format or initialization
- Tape's media pool
- Data residing on the tape
- Age of the backup
- Errors encountered while using the tape (to determine if the tape is faulty).

> ⚠ WARNING
>
> The misuse and misunderstanding of barcode technology can result in backup and restore failures. To ensure that your barcodes meet manufactures quality standards, always purchase them from an approved supplier and never print barcode labels yourself.

Ultrium tape cartridges have a recessed area located on the front of the cartridge next to the write-protect switch. Use this area for attaching the adhesive-backed barcode label. Only apply labels as designated in Figure 3.3.

Copyright 2018 FUJITSU LIMITED

Figure 3.3 Ultrium tape cartridge and proper barcode label placement

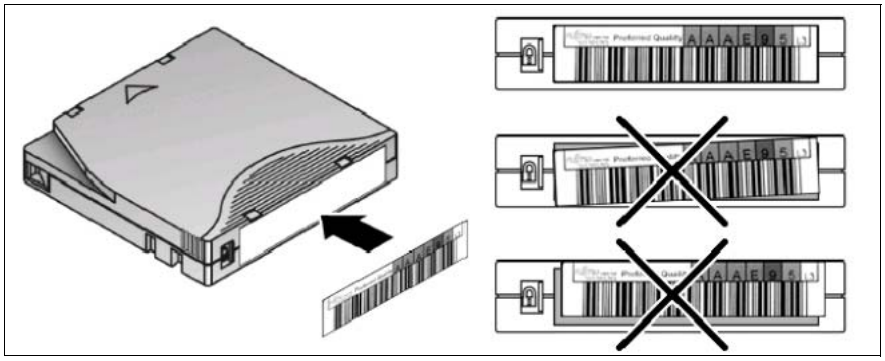

CAUTION

The barcode label should only be applied as shown in Figure 3.3 with the alphanumeric portion facing the hub side of the tape cartridge. Never apply multiple labels onto a cartridge, as extra labels can cause the cartridge to jam in a tape drive.

3.3.4 Write-protecting Tape Cartridges

All rewritable data cartridges have a write-protect switch to prevent accidental erasure or overwriting of data. Before loading a cartridge into the library, make sure the write-protect switch on the front of the cartridge is in the desired position.

- Slide the switch to the right to write-protect the cartridge. A small pad-lock is visible indicating that the cartridge is write-protected (see Figure 3.4).
- Slide the switch to the left to allow the library to write data to the cartridge (see Figure 3.4).

Figure 3.4 Write-protecting the Ultrium data cartridge

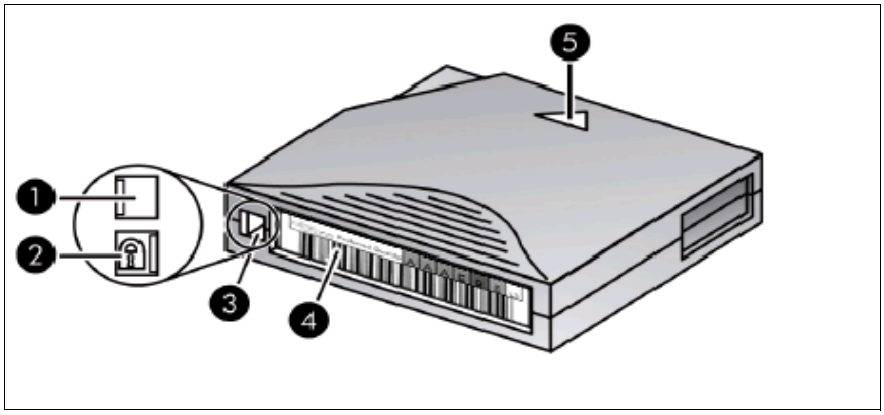

Copyright 2018 FUJITSU LIMITED

Table 3.1 Write protecting

No.	Description
1	Write-enabled
2	Write-protected
3	Write-protect switch
4	Barcode label
5	Insertion arrow

3.3.5 Backward Read Compatibility

You can find compatibility documentation at the following URL:

http://www.fujitsu.com/global/products/computing/storage/tape/eternus-lt/lt40/
http://www.fujitsu.com/global/products/computing/storage/tape/eternus-lt/lt60/

3.3.6 Barcode Reader

The barcode reader provides inventory feedback to the host application and/or LCD screen by reading the cartridge barcode labels. The library stores the customized inventory data in memory.

3.3.7 Activating the Autoclean Function

The autoclean function is disabled by factory default.

Note

Depending on the backup application used on your host, you can decide if this software should manage the cleaning of the library's tape drive or if it will be cleaned by activating the autoclean function.

After enabling autoclean, the autoclean process automatically starts when a cartridge is unloaded from the tape drive that reports "cleaning requested". For cleaning the drive the library can use every previously in an inventory identified cleaning cartridge. A cleaning cartridge must have a "CLN" barcode label to work with the autoclean function.

To activate the autoclean function:

Procedure

1. In the Home Screen of the OCP, select *Configuration → Configure Library → Autocleaning Disabled*.
2. Press *Enter* twice.

End of procedure

Copyright 2018 FUJITSU LIMITED

A cleaning cartridge will not be used once it has exceeded its maximum count of operations (50 loads) or when a medium error was detected during operation.

If there is more than one cleaning cartridge available, the one with highest load count will be used. This causes the cleaning cartridge with the highest load count to wear out first.

3.4 Magazines

Cartridges are stored in magazines. Up to 12 cartridges can be stored in each magazine. Magazines may be removed and inserted individually.

The ETERNUS LT40 S2/LT60 S2 LTO Library tape library has two removable magazines in the 4U library (see Figure 3.5 and Figure 3.7). Magazine access can be password protected. For safety reasons, the robotic motion is stopped when a magazine is removed. See section "3.5.6.6 Changing the Administrative Password" (page 62). The magazines can be released using the Operator Control Panel (OCP) or the Remote Management Unit (RMU). In case the OCP or RMU initiated process has failed or the library no longer has power a manual emergency release is available. See section "4.4 Magazine Does not Unlock via OCP or RMU" (page 77).

3.4.1 Inserting Tape Cartridges Into a Magazine

The slot numbering scheme is shown in Figure 3.5 for the left magazine, and Figure 3.7 for the right magazine.

Figure 3.5 Slot numbering left magazine with mailslot

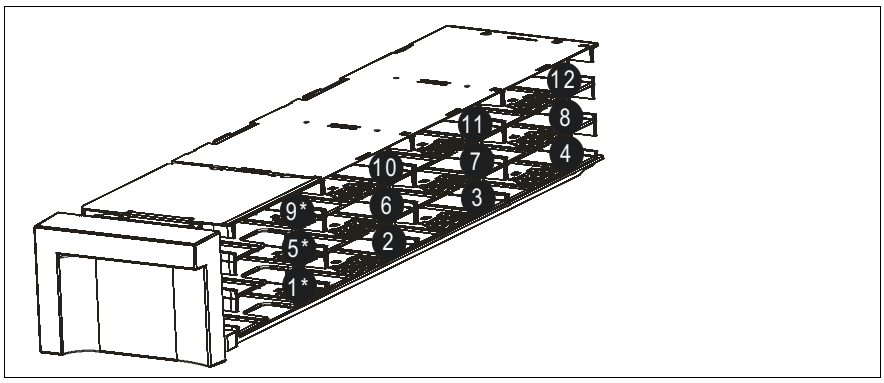

Table 3.2 Slot numbering, left magazine

No.	Description
1*,5*,9*	Mailslot
2 -12	Slot

Copyright 2018 FUJITSU LIMITED

Figure 3.6 ETERNUS LT40 S2: Slot numbering right magazine

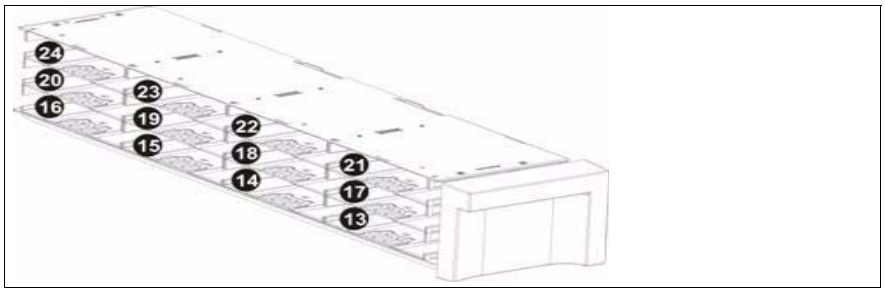

Figure 3.7 ETERNUS LT60 S2: Slot numbering right magazine

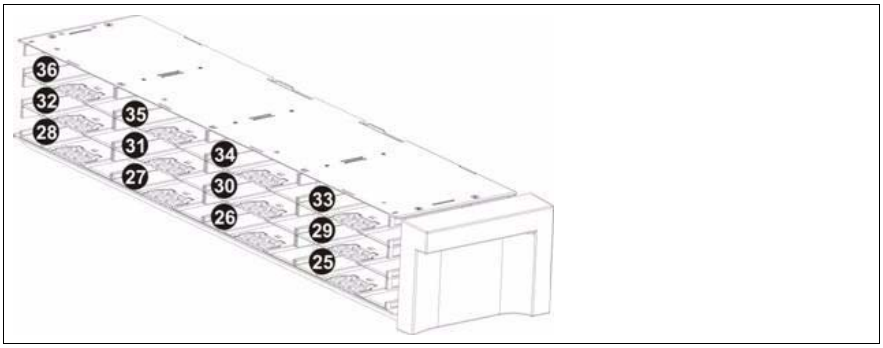

Table 3.3 Slot numbering, right magazine

No.	Description
25-36	Slot

Procedure

1. Unlock the magazines and remove it from the Library
   - Use the OCP, see section "5.7 Removing and Replacing a Magazine Using the OCP" (page 92), or
   - use the RMU, see section "5.8 Removing and Replacing a Magazine Using the RMU" (page 93)
2. Insert cartridge in the magazines.
3. Put the magazines back to the tape Library. Pull lightly on the magazines to check that they are locked.

End of procedure

Copyright 2018 FUJITSU LIMITED

3.4.2 Mailslot

Mailslots are used to import/export individual cartridges without interrupting library operation. The command to open the mailslot may be denied if the robotics is busy with some operation. In that case "Busy" is displayed and the command has to be repeated once the robotics operation is finished.

CAUTION

- Do not lift the tape cartridge upward before it has been completely ejected from the mailslot. The mailslot may fail by doing so.
- When returning the mailslot to the tape library, make sure that "Insert/ Remove Cartridge and Close Mailslot" is displayed on the operator panel. The mailslot may fail if it is not displayed.
- When inserting the mailslot, push the mailslot into the tape library slowly and carefully.

3.5 Remote Management Unit (RMU)

3.5.1 Overview

Many of the same operations performed from the operator control panel can also be performed remotely using the Remote Management Unit.

The RMU lets you monitor and control your library from any terminal connected to your network or through the World Wide Web (WWW). The RMU hosts a dedicated, protected Internet site that displays a graphical representation of your library.

After establishing a connection to the library, open any HTML browser and enter the IP address of the library. To configure the RMU, you must first set the IP address at OCP or DHCP.

In the following sections mostly the screenshots of LT40 S2 are shown. The screenshots of LT60 S2 differ only marginally.

3.5.2 Library Status Icons

Status icons indicate the following conditions.

Table 3.4 Status icons

Symbol	Description
	The green Status Ok icon indicates that the library is fully operational and that no user intervention is required.

Copyright 2018 FUJITSU LIMITED

Symbol	Description
	The yellow exclamation point for Status Warning indicates that user intervention is necessary, but that the library is still capable of performing operations.
	The red X Status Error indicates that user intervention is required and that the library is not capable of performing operations.

3.5.3 Login

Caution

Some options of the RMU take the library offline. This inactive mode can interfere with host-based application software, causing data loss. Make sure the library is idle before attempting to perform any remote operations that will take the library offline.

To login, select the access type and enter the correct password. There are three levels of access:

- Standard user level (default password *std001*)
- Admin user level (default password *adm001*)
- Service personnel user level. Access to this level is by Service personnel only.

Each level affects which areas you have access to and what actions you can initiate from those areas.

Figure 3.8 RMU login page



3.5.4 Identity

3.5.4.1 Viewing Static Library Information

This page provides access to the static information about the system.

Copyright 2018 FUJITSU LIMITED

The following information can be found, although no changes can be made from this page:

- Serial Number
- Product ID
- Currently Installed Library Firmware
- Bootcode Firmware Revision
- Barcode Reader
- Library Mode
- WWide Node Name

If the unit has more than one partition the properties of all logical libraries are displayed.

Figure 3.9 ETERNUS LT40 S2: Identity, Library page

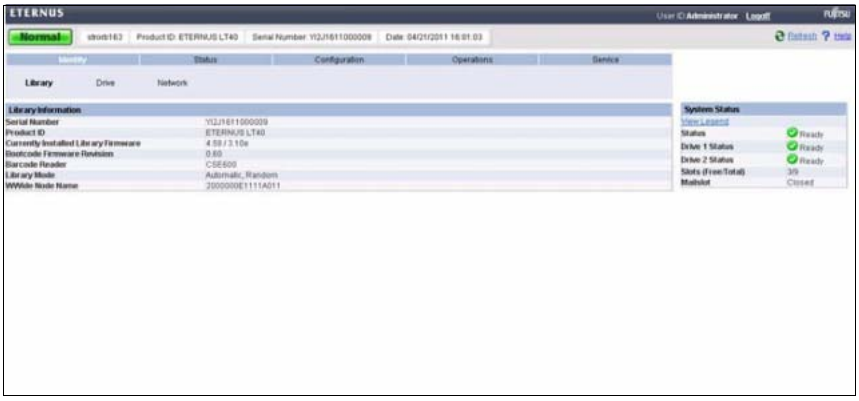

3.5.4.2 Viewing Static Drive Information

This page provides detailed information about the drive(s). No changes can be made from this page.

Figure 3.10 ETERNUS LT40 S2: Identity, Drive page

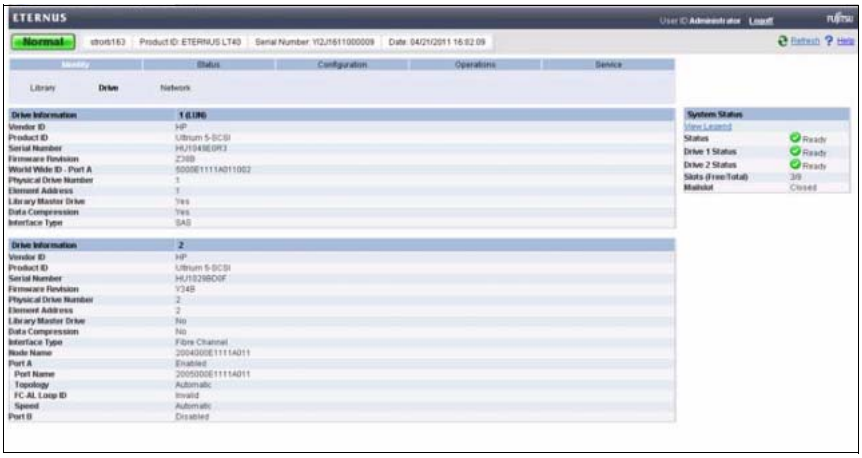

Copyright 2018 FUJITSU LIMITED

3.5.4.3 Viewing Static Network Information

This page provides detailed information about the network(s). No changes can be made from this page.

Figure 3.11 ETERNUS LT40 S2: Identity, Network page

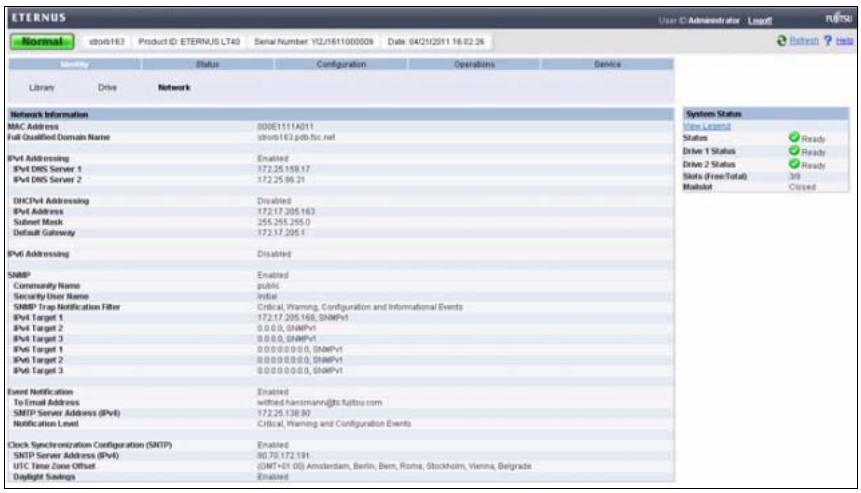

3.5.5 Status

3.5.5.1 Viewing Dynamic Library Information

This page displays the dynamic information about the library, such as the current status of the components. The following information can be found on this page:

- Status
- Cartridge in Transport
- Number Of Moves
- Total Power On Time
- Robotic Status
- Internal Temperature
- Power Supply Status
- Media Removal (allowed or prevented, from on library firmware version 4.70)
- Magazines

Copyright 2018 FUJITSU LIMITED

Figure 3.12 ETERNUS LT60 S2: Status, Library page



3.5.5.2 Viewing Dynamic Drive Information

This page provides detailed information about all drives that are present in the library.

Figure 3.13 ETERNUS LT60 S2: Status, Drive page



Copyright 2018 FUJITSU LIMITED

3.5.5.3 Viewing the Tape Cartridge Inventory

This page provides detailed information about the tape inventory in the library. A summary of each magazine is shown. To get detailed information, click on the + button. This will expand the display for the specified magazine.

Figure 3.14 ETERNUS LT40 S2: Status, Inventory page

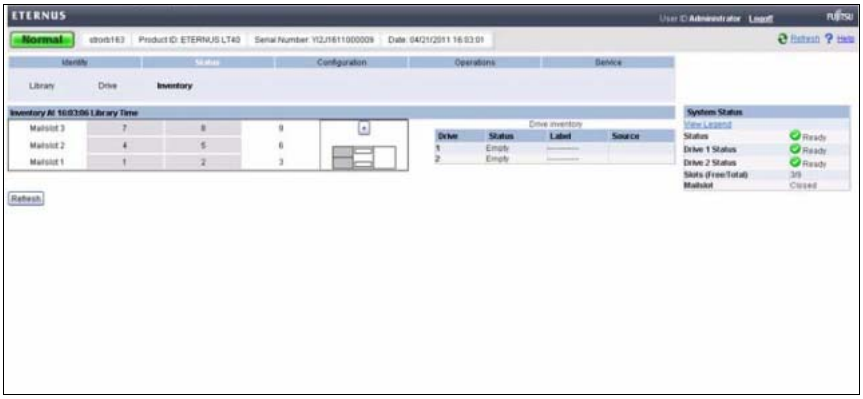

3.5.6 Configuration

3.5.6.1 Changing the System Configuration

As changes are made, they will only be applied after the "Apply Selections" (or "Submit") button down right is selected. To make the changes visible, you have to click the "Refresh" button. After making the selection, a warning page will inform the user of the impact of their proposed change. In some cases a pop-up screen will ask the operator to confirm their change. Many changes will also require a reboot.

Changes that can be made are:

- Library Master Drive
- Library Mode: Random, Sequential, Automatic Autoload, Loop
- Active Slots
- Mailslot Enabled
- Auto Clean Enabled
- Barcode Label Length Reported To Host
- Barcode Label Alignment Reported To Host
- Select Language

Copyright 2018 FUJITSU LIMITED

Figure 3.15 ETERNUS LT40 S2: Configuration, System page

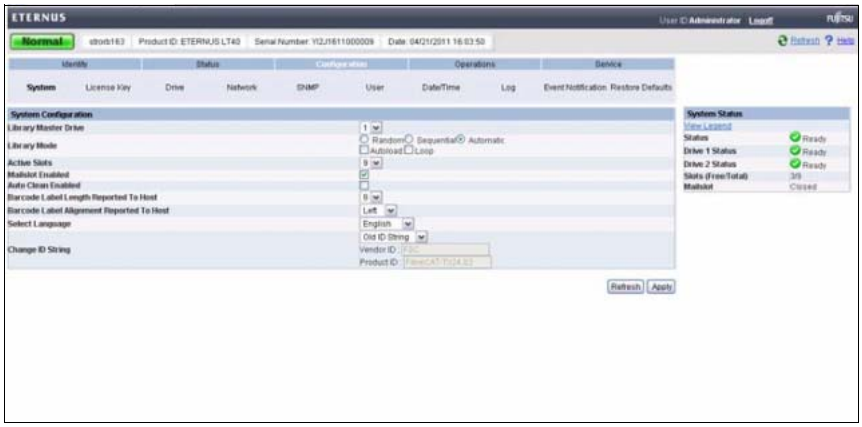

3.5.6.2 Adding License Keys

This page allows the user to add additional functionality to the unit by entering license key information.

Note

License keys are required for setting *Logical Libraries* and *Slot Extension options*.

Figure 3.16 ETERNUS LT60 S2: Adding license keys

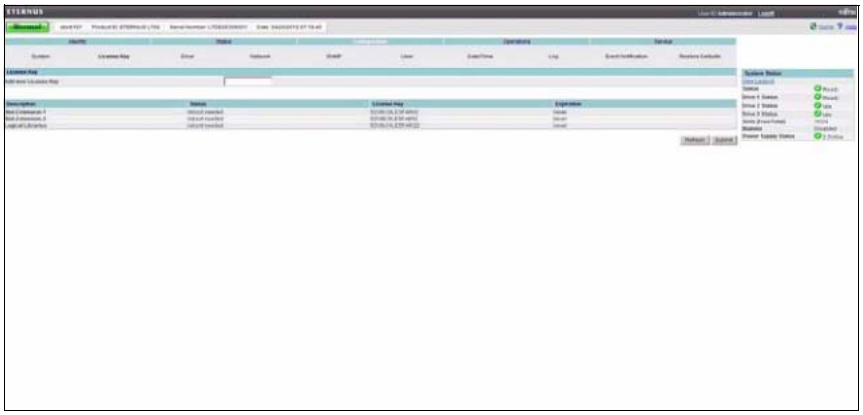

Note

The *Slot-Extension-2* option can be configured for ETERNUS LT60 S2 models only.
After setting the *Logical Libraries* option, an additional *Logical Libraries* menu item is available in the second menu headline. After selecting it allows to set how many *Logical Libraries* are to be configured.

Copyright 2018 FUJITSU LIMITED

3.5.6.3 Changing the Drive Configuration

This page shows the current configuration of all drives in the library and allows modification to the configuration. The user is also able to select Power on through this page which activates the drive.

Figure 3.17 ETERNUS LT40 S2: Configuration, Drive page

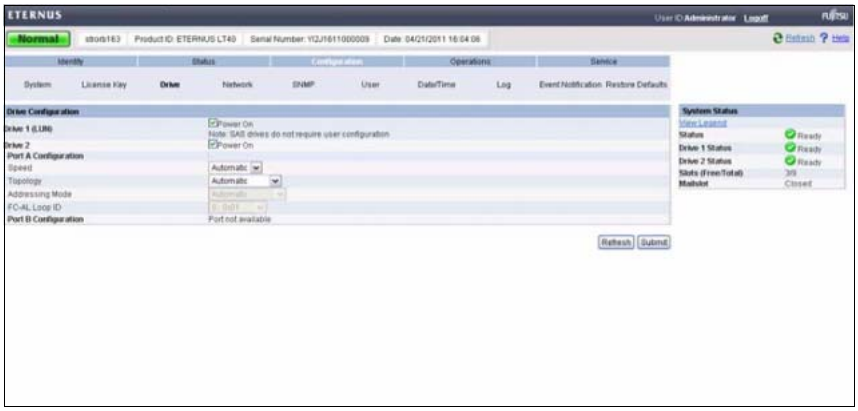

3.5.6.4 Changing the Network Configuration

This page shows the current network configuration of the library and allows modification to the configuration. When a change is requested, a pop-up box will ask to confirm the changes.

A list of changes that can be made is:

- Host Name
- Domain Name
- IPv4
  - DHCP Address
  - Static Address
  - Subnet Mask
  - Gateway Address
  - IPv4 DNS Server 1 and 2
- IPv6
  - IPv6 DNS Server 1 and 2
  - Stateless Auto Config Address
  - DHCPv6 Addressing
  - Static Addressing
  - Static Assigned Address
- Enable SSL for Web

Copyright 2018 FUJITSU LIMITED

Figure 3.18 ETERNUS LT40 S2: Configuration, Network page

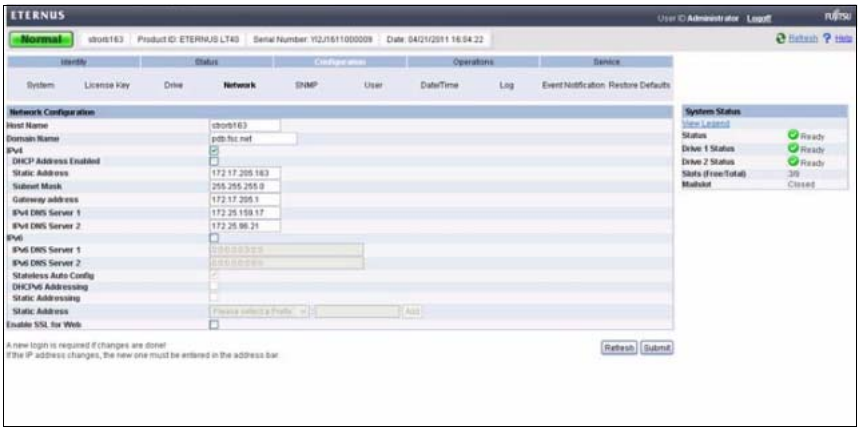

Certificate Installation for SSL Data Transfer

To ensure secure SSL data transfer, it is necessary to install a certificate. For this purpose the user is requested in Windows to generate a certificate when a connection is set up.

Figure 3.19 Certificate generation



Reply field	Meaning
Yes	The certificate is generated and installed
No	You exit the procedure
Display certificate	The certificate obtained is displayed

Copyright 2018 FUJITSU LIMITED

The following screen is displayed for selection item 3:

Figure 3.20 Certificate information



The following screen appears when you install the certificate:

Figure 3.21 Certificate import wizard: Welcome



Copyright 2018 FUJITSU LIMITED

The screens below are displayed when you click on "Next >":

Figure 3.22 Certificate import wizard: Storage

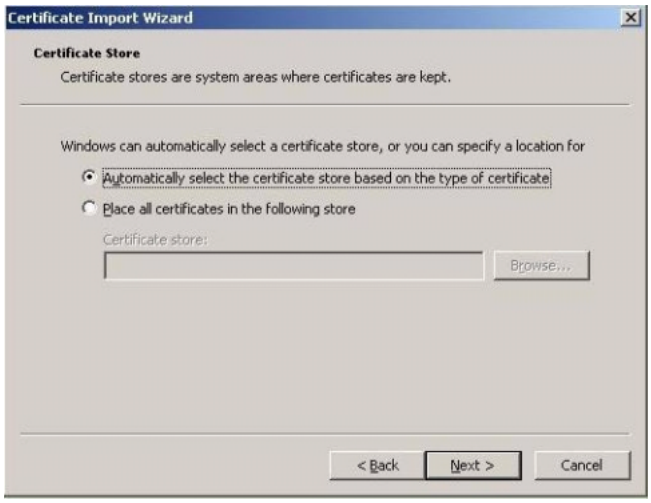

Figure 3.23 Certificate import wizard: Finishing (1)



Figure 3.24 Certificate import wizard: Finishing (2)



Copyright 2018 FUJITSU LIMITED

Figure 3.25 Termination of certificate installation

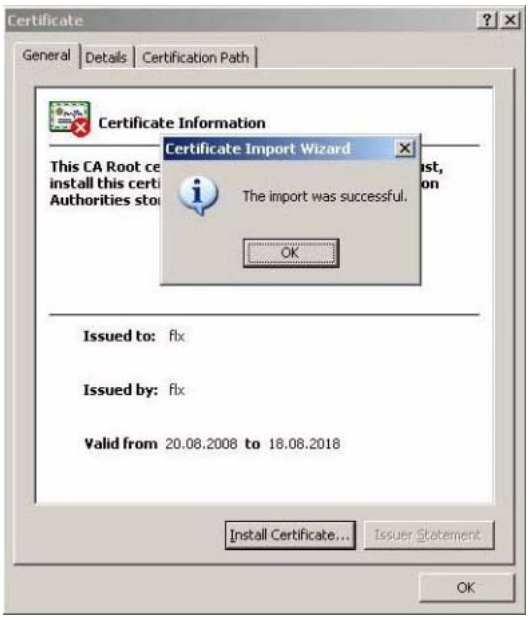

To terminate installation of the certificate, either click on "OK" or the X in the top right-hand corner of the screen.

After certificate installation a parameter must be modified in Internet Explorer to prevent the request for the certificate always appearing:

In *Internet Options → Extended,* uncheck the box for showing warnings if the certificate address does not match and click *OK*.

Figure 3.26 Unchecking the warnings box

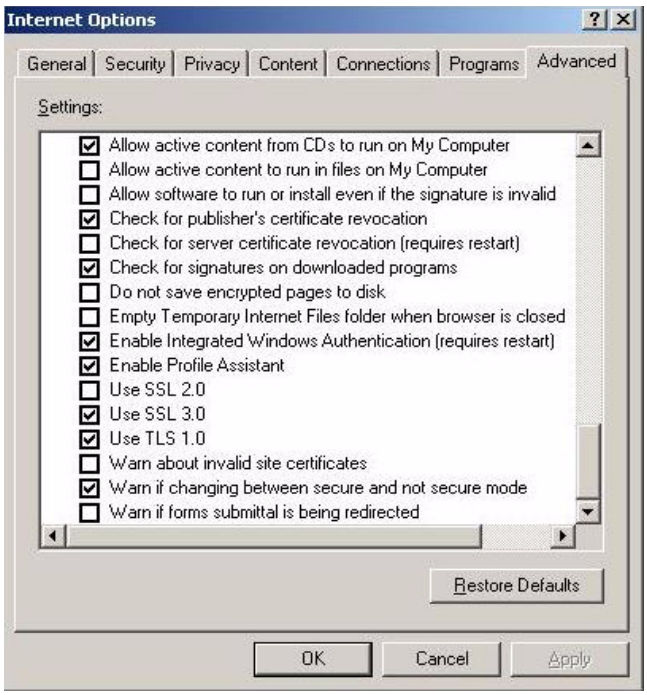

Copyright 2018 FUJITSU LIMITED

3.5.6.5 Changing the SNMP Configuration

This page shows the current SNMP configuration of the library and allows modification to the configuration. When a change is requested, a pop-up box will ask to confirm the changes.

A list of changes that can be made are:

- SNMP Enabled
- IPv4 SNMP Target Addresses
  - IPv4 Target 1-3
- IPv6 SNMP Target Addresses
  - IPv6 Target 1-3
  - Community Name
  - Security User Name
  - SNMP Trap Notification Filter

Figure 3.27 ETERNUS LT40 S2: Configuration, SNMP page

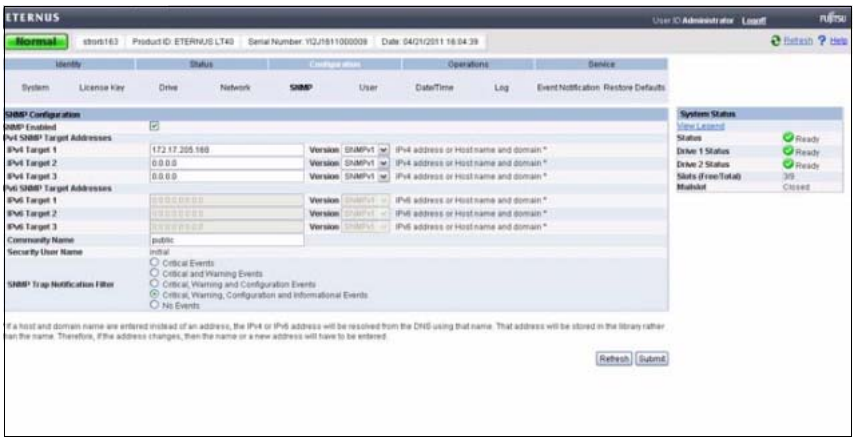

3.5.6.6 Changing the Administrative Password

This page allows the user to add and modify user accounts.

- Access Level
  Choose from 1 (Standard), 2 (Admin), or 3 (Service).
- Access Level Name
  the name associated with the chosen Access Level
- New Password
  The password can be a maximum of ten characters.
- Repeat Password
  Enter the new password again.
- OCP Access Pin Enabled
  Select this item, if you would like the Operator Control Panel display to be password protected.
- OCP Access Pin Code
  the password for accessing the OCP when the OCP Access Pin is enabled.
- Repeat OCP Access Pin Code
  Enter the OCP Access Pin Code again.

Copyright 2018 FUJITSU LIMITED

- Support Name
  the name of the individual within your company to contact for RMU or library support
- Support Phone
  the phone number of the individual within your company to contact for RMU or library support
- Support Email
  the email address of the individual within your company to contact for RMU or library support

Figure 3.28 ETERNUS LT40 S2: Configuration, User page

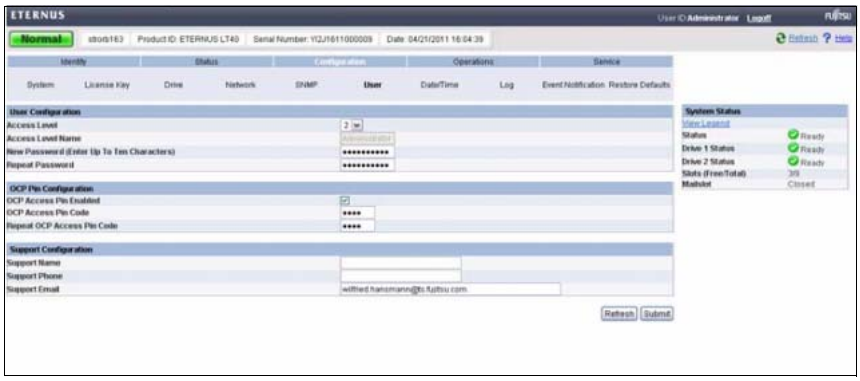

3.5.6.7 Setting Date/Time

This page allows the user to set the time and date, and how it will be displayed.

- Time (24H)
  Enter the current time. Using the 24-hour format, 1:00 pm would be 13:00:00 (HH:MM:SS).
- Date
  Enter the current date.

Clock Synchronization Configuration

- Enable Clock Synchronization
  Click to enable or disable the SNTP server. Click *Help* for further information.
- SNTP Server Address
  Most NTP (Network Time Protocol) servers also support SNTP (Simplified NTP). Click *Help* for further information.
- UTC Time Zone Offset
  This shows current time zone selected. Select the zone for your location from the pull down list.
- Enable Daylight Savings Adjustment
  Enabling Daylight Savings will advance the local time by one hour. Click *Help* for further information.

Copyright 2018 FUJITSU LIMITED

Figure 3.29 ETERNUS LT40 S2: Configuration, Date/Time page

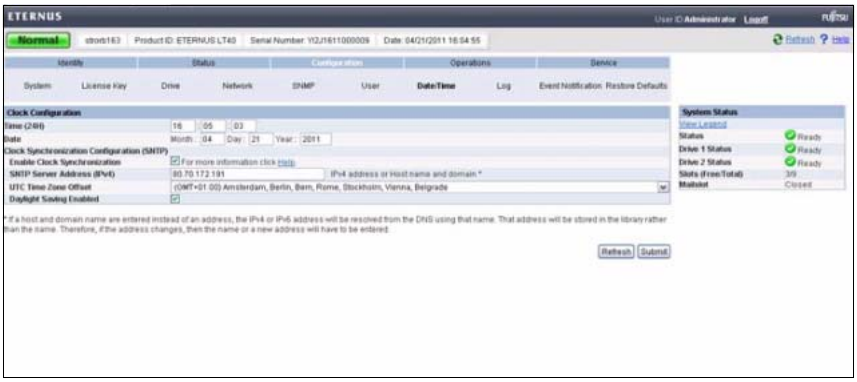

3.5.6.8 Setting Error Log Mode

This page allows service personnel to set the error log mode to *Off, Continuous,* or to *Stop Trace At First Error.*

Figure 3.30 ETERNUS LT40 S2: Configuration, Log page

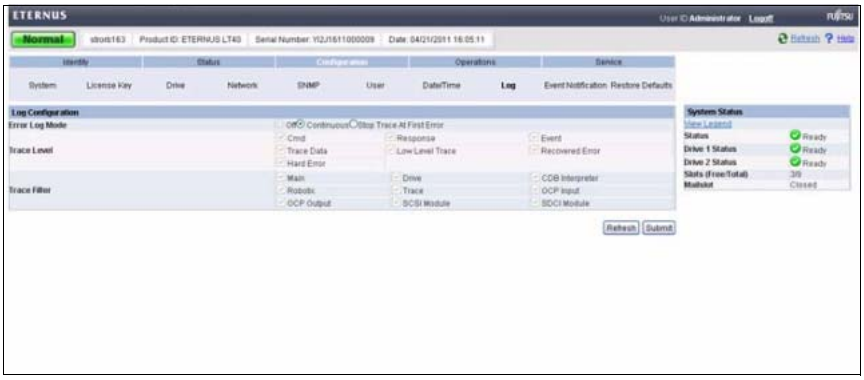

Note

The trace level and trace filter selection options are only changeable by Service personnel.

3.5.6.9 Setting Event Notification Parameters

This page allows the user to set the event notification to On.
To use this function, the Host Name and the Domain Name must be set. For details, refer to "3.5.6.4 Changing the Network Configuration" (page 57).

Choices for the event notification are:

- Event Notification
  Select this item to be notified of library errors via email
- Notification Level
  Specify at which type of error/warning you would like to be informed via email
- To Email Address
  Enter the email address of the individual you would like to receive the errors and/or warnings

Copyright 2018 FUJITSU LIMITED

- Send additional Dump to Email Address
  Enter the email address of the individual you would like to receive the dump
- Send additional Dump by Mail
  Enter the desired frequency for the dump
- SMTP Server Address (IPv4)
  Enter the address of the mail server of the individual you would like to receive the errors and/or warnings.

Figure 3.31 ETERNUS LT40 S2: Configuration, Event notification page

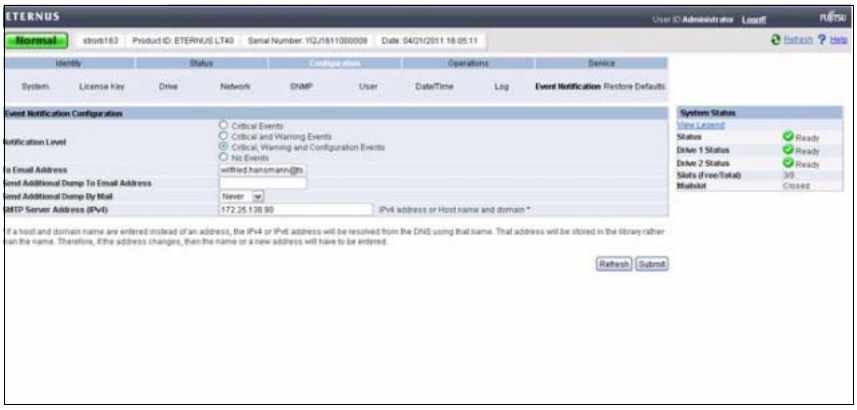

3.5.6.10 Restoring Factory Defaults

This page allows the user to reset the configuration to the factory defaults, restore vital product data, and save vital product data.

Figure 3.32 ETERNUS LT40 S2: Configuration, Restore defaults page

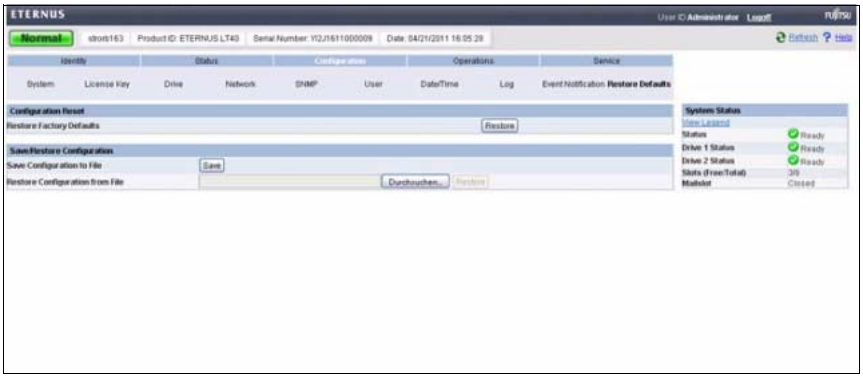

Copyright 2018 FUJITSU LIMITED

3.5.7 Operations

3.5.7.1 Moving Media Within the Library

This page allows the user to move tape cartridges within the library. The source and destination are selected and then the move button in the center of the screen is clicked to activate the move.

Figure 3.33 ETERNUS LT40 S2: Operations, Move Media page

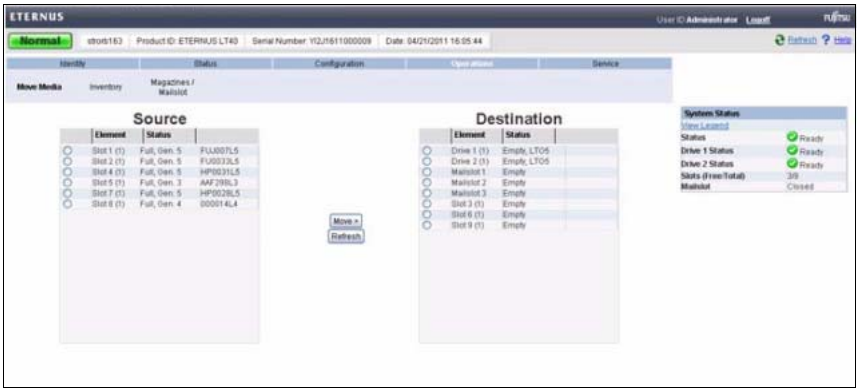

3.5.7.2 Determining Current Media Inventory

This page provides the user with a means to re-scan the library to determine the current media inventory.

Figure 3.34 ETERNUS LT40 S2: Operations, Inventory page

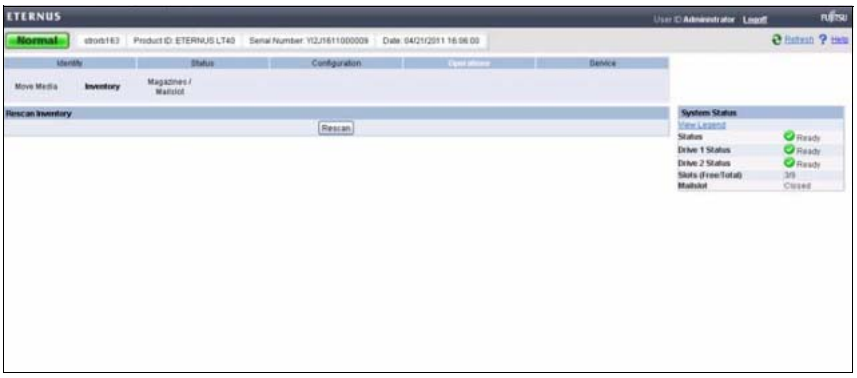

Copyright 2018 FUJITSU LIMITED

3.5.7.3 Releasing and Replacing Magazines

This page allows the user to release the right or left magazine from the library.

Figure 3.35 ETERNUS LT40 S2: Operations, Magazines page

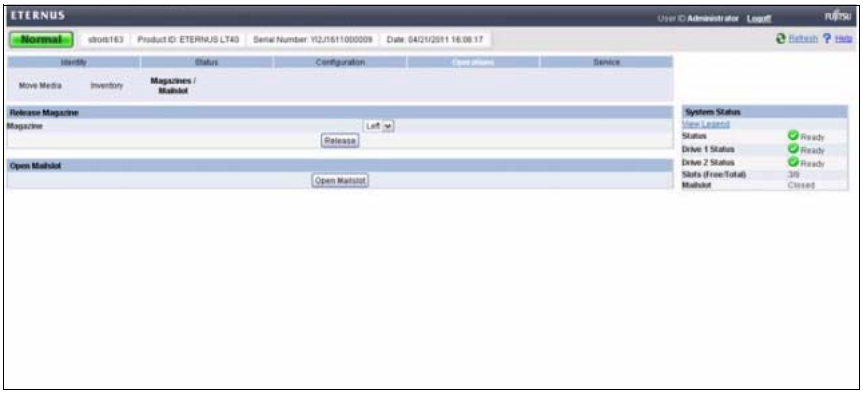

Note

To manually release a magazine, see section "4.4 Magazine Does not Unlock via OCP or RMU" (page 77). However, this manual process should only be used if the magazine cannot be released using the Operator Control Panel or the Remote Management Unit.

3.5.8 Service

3.5.8.1 Performing General Library Diagnostics

This page provides the system administrator with general tests to verify the usability and reliability of the library. The user selects the number of test cycles before starting the test. To cancel the test before it completes the cycles, select the Stop button.

Figure 3.36 ETERNUS LT40 S2: Service, General Diagnostic page

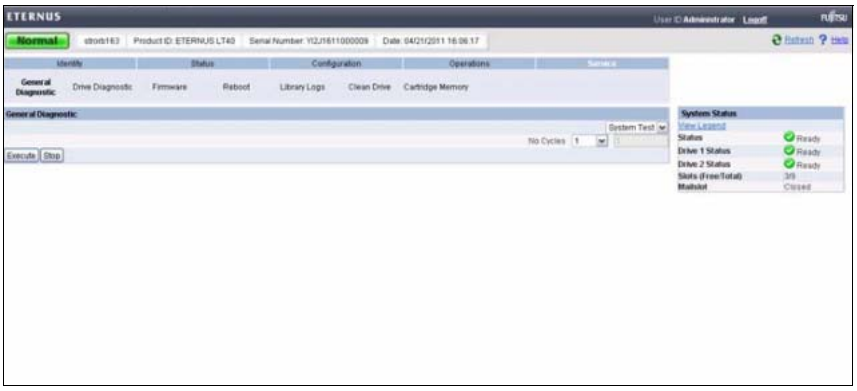

Copyright 2018 FUJITSU LIMITED

3.5.8.2 Performing Drive Diagnostics

This page provides the system administrator with tests to verify the usability and reliability of the drive.

The user selects the drive test type. A Drive Support Ticket can be created and downloaded which can support service engineers solving drive and media problems.

Figure 3.37 ETERNUS LT40 S2: Service, Drive Diagnostic page

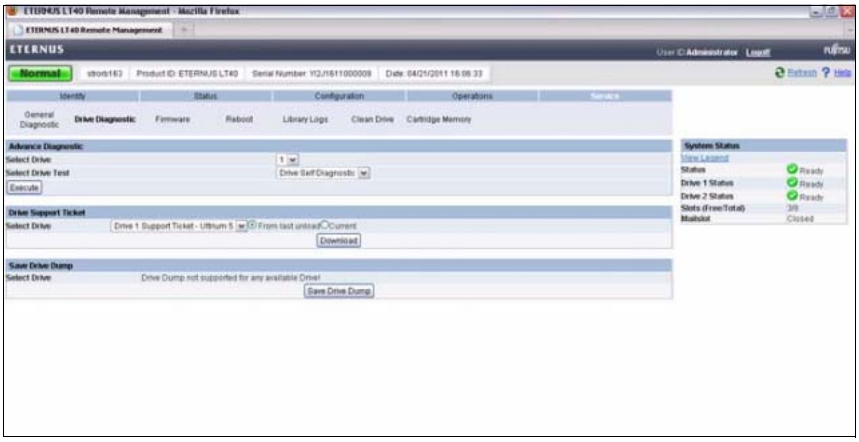

3.5.8.3 Determining and Updating Firmware

This page displays the current library and all drive firmware versions. Firmware can be downloaded to the host then uploaded to the drive in the library by using this page.

Caution

After a library upgrade the system restarts automatically.

Figure 3.38 ETERNUS LT40 S2: Service, Firmware page

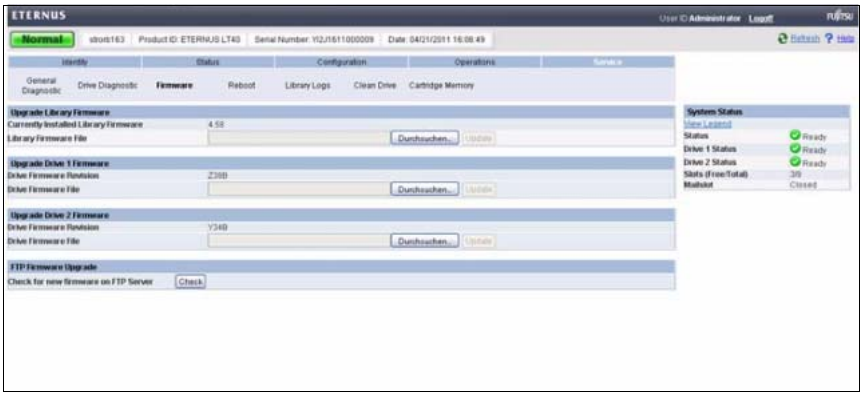

Copyright 2018 FUJITSU LIMITED

3.5.8.4 Rebooting the Library

Caution

Some options of the RMU take the library offline. This inactive mode can interfere with host-based application software, causing data loss. Ensure that the library is idle before attempting to perform any remote operations that will take the library offline.

This page is used to perform a library reboot. There is a default time delay when the Web page refreshes itself. This time should be sufficient to reload the page. However, during a reboot, the connection to the library may be lost. If the connection is lost, the user will have to reload the page manually.

Figure 3.39 ETERNUS LT40 S2: Service, Reboot page

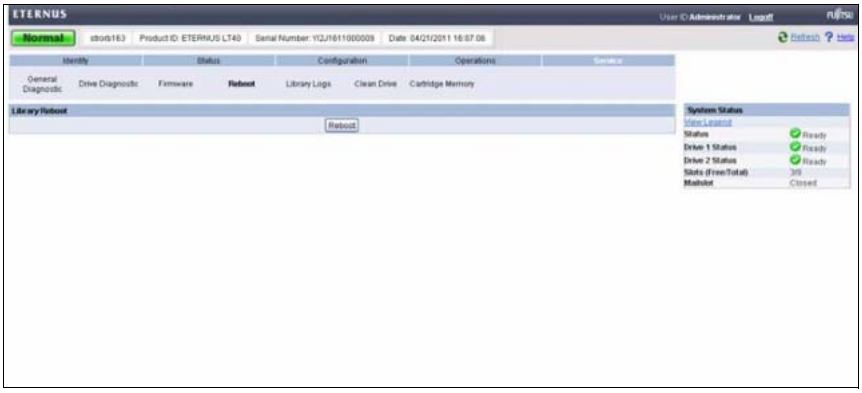

3.5.8.5 Viewing Library Logs

This page allows the user to view the library logs after entering the following:

- Log Type
- Total Number of Entries
- Start Entry
- Number of Entries per Page
- Update
- Dump Log
- Save Service Dump
- Email Service Dump

Copyright 2018 FUJITSU LIMITED

Figure 3.40 ETERNUS LT40 S2: Service, Library Logs page

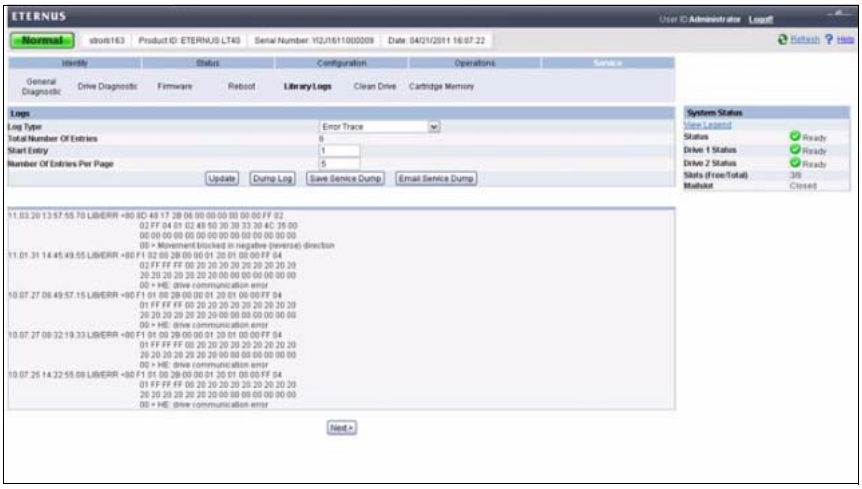

3.5.8.6 Cleaning Tape Drive

This page allows the user to clean the tape drive.

Figure 3.41 ETERNUS LT40 S2: Service, Clean Drive page

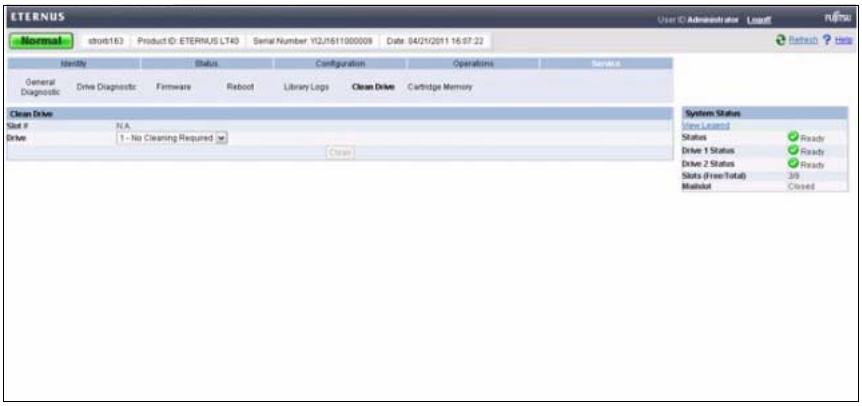

Copyright 2018 FUJITSU LIMITED

3.5.8.7 Cartridge Memory

Selecting "Cartridge Memory" you get information on all cartridges in the library and on all specific values the library handles for each cartridge.

Figure 3.42 ETERNUS LT40 S2: Service, Cartridge Memory

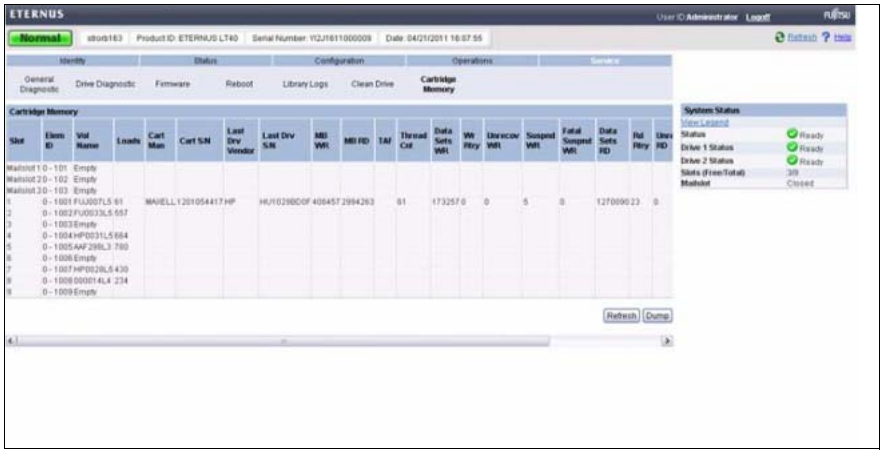

Copyright 2018 FUJITSU LIMITED

Chapter 4
Troubleshooting

4.1 Installation Problems

Problems encountered during the installation of the library are usually caused by improper bus configuration, application software configuration errors, or an incorrectly configured operating system. If the application software that you are using is not communicating with the library after installation, check the following:

4.1.1 LUN Scanning

Use dual LUNs to control the tape drive (LUN 0) and library robot (LUN 1). The ETERNUS LT40 S2/60 S2 requires an HBA that supports LUN scanning and LUN scanning must be enabled.

4.1.2 Backup Application Installation

Refer to the documentation included with your backup application for instructions on how to verify proper installation. Some backup software packages require an additional module to communicate with the library robotics.

4.1.3 Device Driver Installation

Make sure that the proper device driver, if applicable, is installed for the library. Contact your support representative for more information.

Note

Many backup applications use their own drivers for the library and drive. Before installing a driver, make sure it will not be in conflict with the software.

Copyright 2018 FUJITSU LIMITED

4.2 Troubleshooting Table

Table 4.1 Troubleshooting table

Problem		Solution
Power	Library does not power on	• Check all power cord connections. • Make sure the power switch on the front panel is in the ON position. • Make sure there is power to the outlet. Try another working outlet. • Replace the power cord. • Contact your service representative.
	No display messages appear	• Make sure the power cord is connected. • Make sure the power switch is on. • Power cycle the library. • Download library firmware. • Contact your service representative.
Tape Movement	Tape stuck in drive	• Power cycle the library, allow it to complete initialization, which in rare cases can take as long as 10 minutes, and then retry unloading the tape using the library operator control panel. • Allow the tape drive to complete all operations. This may take as long as ten minutes if you reset or cycle power on the library while the cartridge is positioned at the physical end of the media. • Make sure that the backup software is not reserving the slot or preventing the tape drive from ejecting the cartridge. The backup software needs to cancel the reservation and any hold it has on the tape drive. Temporarily disconnecting the library from the host server and power cycling eliminates the host and its software as a problem source. • Contact your service representative.
	Tape stuck in storage slot	See section "4.3 Removing Stuck Tapes From Slots" (page 76).

Copyright 2018 FUJITSU LIMITED

Problem		Solution
Media	Cleaning or data cartridge incompatible with drive.	Make sure you are using data and cleaning cartridges that are compatible with the drive and model of your library. The library automatically unloads incompatible cartridges, the Media Attention LED flashes, and an exclamation mark (!) is displayed in the inventory display for the indicated slot number. Export the media in order to clear the state.
	Cannot write to or read from tape.	• Make sure that the cartridge is write enabled (move the write-protect switch to the enabled position). • Make sure you have the appropriate data cartridge for your library model. • Make sure you are using an Ultrium cartridge that has not been degaussed. Do not degauss Ultrium cartridges. • Make sure that the cartridge has not been exposed to harsh environmental or electrical conditions and is not physically damaged in any way. • Many backup applications do not read or write to cartridges that were created using a different backup application. In this case, you may have to perform an erase, format, or label operation on the cartridge. • Make sure you understand any data protection or overwrite protection schemes that your backup application may be using, which could prevent you from writing to a given cartridge. • Retry the operation with a different, known good tape. • Clean the tape drive. See section "3.5.8.6 Cleaning Tape Drive" (page 70).
Cleaning	Cannot load the cleaning cartridge	• Make sure you are using an Ultrium universal cleaning cartridge (See section "3.5.8.6 Cleaning Tape Drive" (page 70)). • Contact your service representative.
Errors Displayed on Operator Control Panel	"!" in library operator panel inventory display	See section "3.1 Operator Control Panel (OCP)" (page 36).
	There is an error code on the LCD	Look up the error code, try to resolve the failure, and power cycle (see section "4.6 Tape Library Error Codes" (page 80)).

Copyright 2018 FUJITSU LIMITED

Problem		Solution
Bad performance		• Try a new cartridge. A marginal cartridge can cause performance problems due to bad spots on the tape requiring retries. • Backing up data that compresses poorly or is already compressed will lower performance. • Check the size of the files. Small file size can impact performance. • Confirm that the backup application is utilizing block sizes of at least 32KB, preferably 64KB. Refer to the backup application documentation for details. • Check the network bandwidth from the host computer. If you are backing up data over a network, consider comparing to a local-only backup. • Make sure the backup server has enough memory to handle the bandwidth of the backup or restore. • Clean the tape drive. See section "3.5.8.6 Cleaning Tape Drive" (page 70).
Media Attention LED Issues	Contamination by loose debris.	Avoid contamination by ensuring that the library is installed in a clean, contamination-free environment. Cartridges should be stored vertically in their plastic cases. Continue cleaning the tape drive as needed.
	Non-acclimated media	A cartridge should be acclimated for at least 24 hours before being used, particularly if it has been stored at a substantially different temperature or level of humidity than the library.
	Cartridge is incompatible	Use only cartridges that are compatible with the drive type. • Make sure you are using an Ultrium universal cleaning cartridge. (See section "3.5.8.6 Cleaning Tape Drive" (page 70)).
	Expired cleaning cartridge	A cleaning cartridge is good for Ultrium universal libraries: 50 cleans
	Bad/defective/contaminated media	If the Media Attention LED is cleared and - although the drive has been cleaned - immediately re-displays each time a particular cartridge is reloaded that cartridge should be suspected as being defective. • Export the cartridge and load a known good cartridge. In some cases, a cartridge can be worn out, have a defective Cartridge Memory, or have been formatted as a Firmware Upgrade Cartridge. • Any cartridge that is suspected of being defective or contaminated should NOT be reused in any drive.

Copyright 2018 FUJITSU LIMITED

4.3 Removing Stuck Tapes From Slots

Procedure

1. Unlock the magazine and remove it from the library.
   - Use the OCP, see section "5.7 Removing and Replacing a Magazine Using the OCP" (page 92).
   - Use the RMU, see section "5.8 Removing and Replacing a Magazine Using the RMU" (page 93).
2. The finger holes on the back side of the magazines (see Figure 4.1) allow the user to pull the cartridges out of the slot. Remove and insert the cartridge mechanically. Repeat the process ten times.

   Figure 4.1 Removing stuck tapes from slot

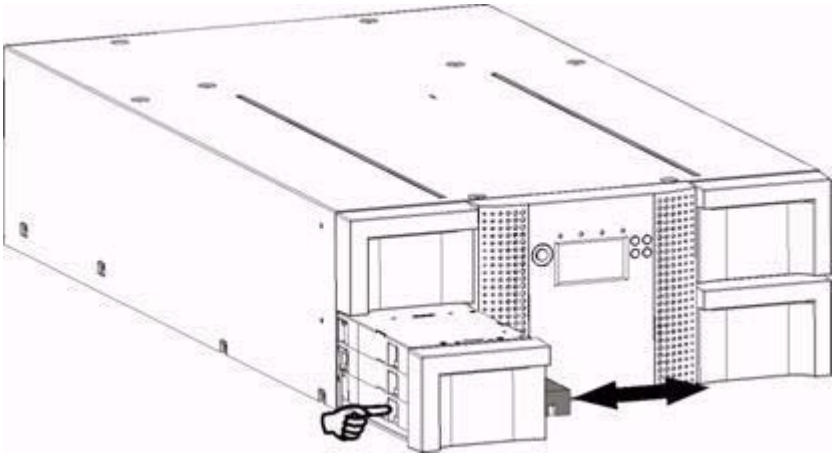

3. During this process the burr will be removing.
4. Insert cartridge in the magazine.
5. Put the magazine back to the tape Library. Pull lightly on the magazine to check that it is locked.

End of procedure

Copyright 2018 FUJITSU LIMITED

4.4 Magazine Does not Unlock via OCP or RMU

If you are not able to remove the magazines using OCP and RMU, an emergency release mechanism is available.

⚠ WARNING

Use only in case of emergency!

Procedure

1. Unplug the power cord from the library.
2. Find the access holes for the right and left magazines. See Figure 4.2.

Figure 4.2 Access holes for the left and right magazine

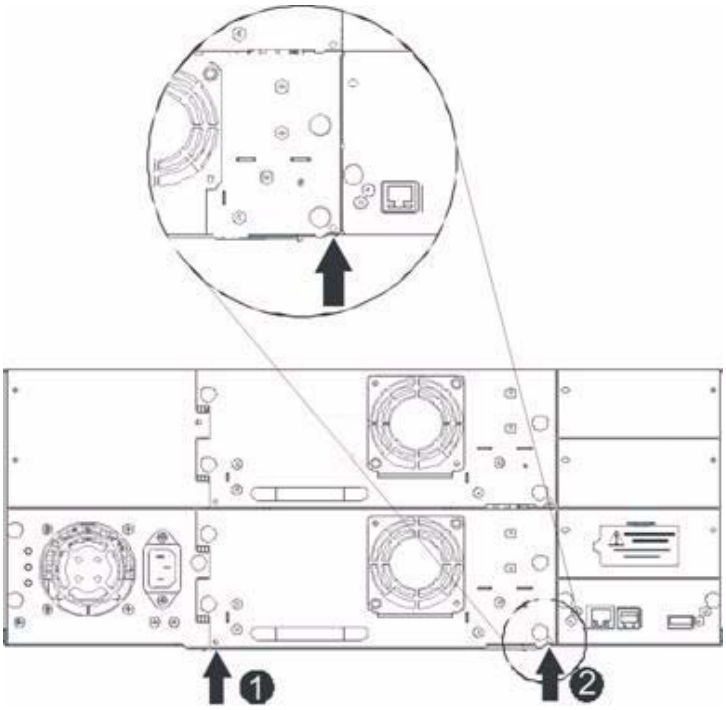

Table 4.2 Access to manually release a magazine

No.	Description
1	Right magazine release
2	Left magazine release

Copyright 2018 FUJITSU LIMITED

3 To manually release the magazines, push the end of a straightened paper clip into the access hole for each magazine at the back of the library. While holding the paper clip, have a second person pull the magazine out of the front of the unit. See Figure 4.3.

Figure 4.3 Remove the left magazine

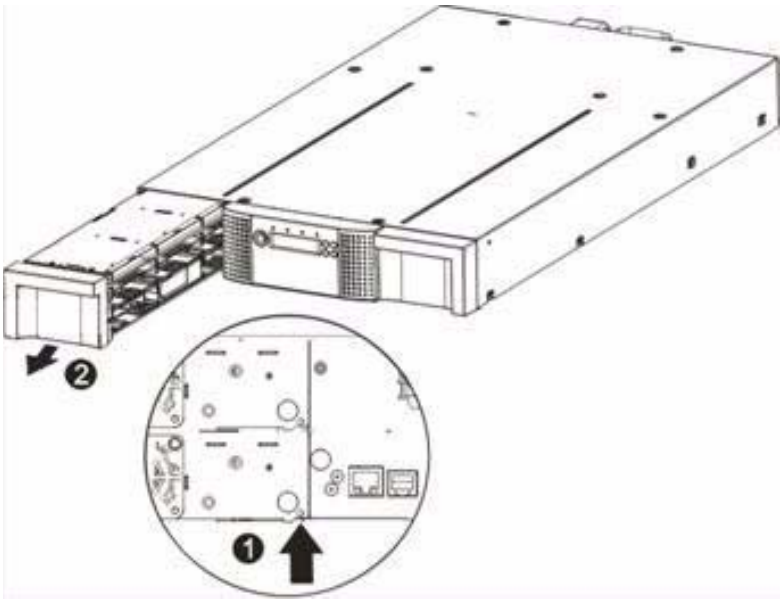

Table 4.3 Removing the left magazine

Step	Process
1	Insert pin into access hole
2	Release and remove magazine

End of procedure

If there are additional tapes still in the library, or if you were unable to manually remove the magazines and drive, contact service for further instructions.

Copyright 2018 FUJITSU LIMITED

4.5 Media Removal Prevented

From on library firmware version 4.70, the backup software can prevent media removal by disabling mailslot opening and magazine removal functionality. In the *Library Status* and the *Drive Status* pages then the *Media Removal* entries are set to *Prevented*.

Figure 4.4 *Media Removal* information in the *Library Status* page (LT60 S2 example: *Allowed*)

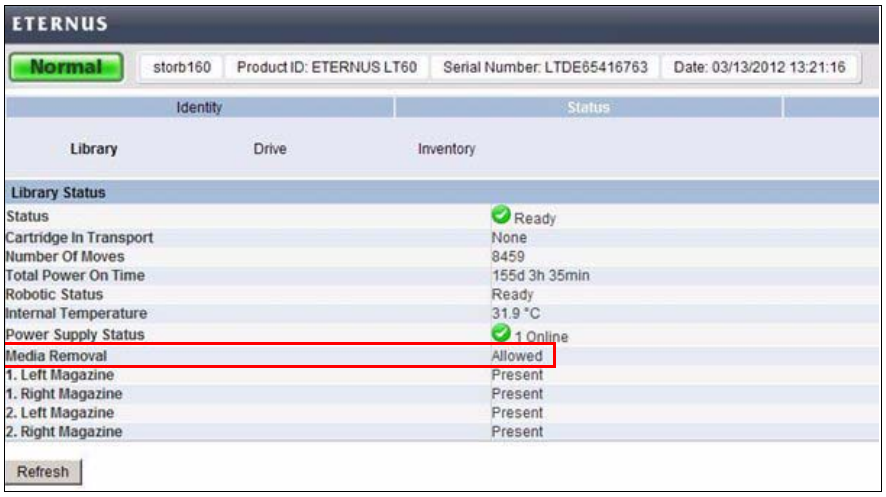

Figure 4.5 *Media Removal* information in the *Drive Status* page (LT60 S2 example: *Allowed*)

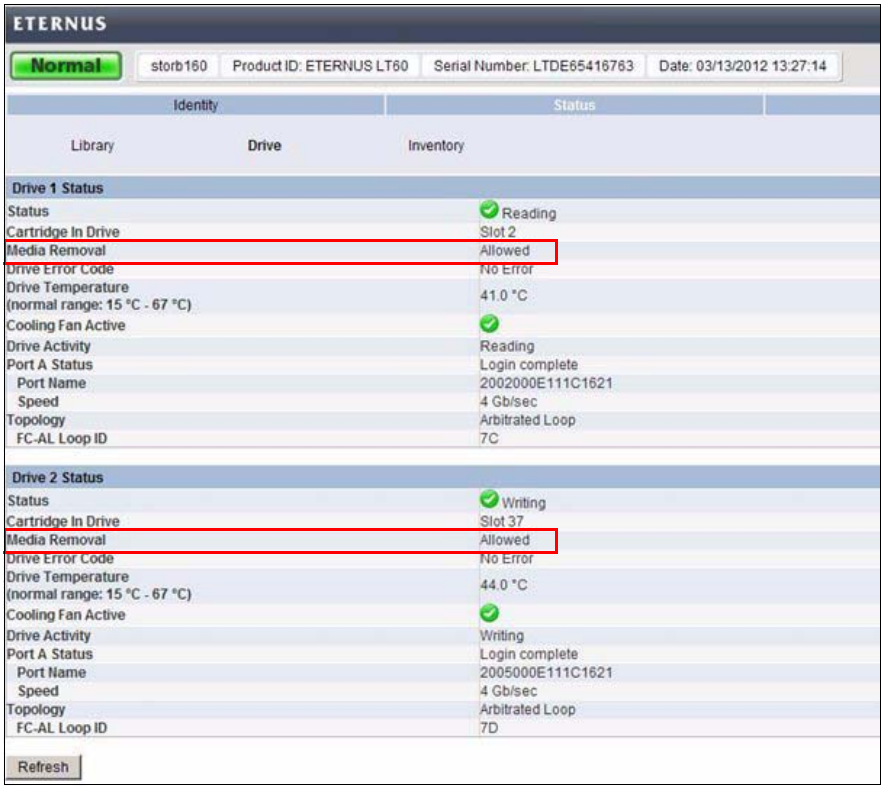

Copyright 2018 FUJITSU LIMITED

Note

If *Media Removal* is set to *Prevented* and the interface connection between host adapter and library or drive (SAS or FC) is disconnected, you have to reboot the library. After reboot the *Media Removal* is reset to *Allowed*.

4.6 Tape Library Error Codes

If an error occurs during operation of the library, the library stops the current operation and displays an error code on the LCD screen. Unless otherwise noted in Table 4.4, try to resolve the error by cycling power to the library and retrying the last operation. If the error persists, contact support personnel.

4.6.1 Example Error Code

EVENT -6
A5 F1
Where:

- Sequence number -6 indicates the position in sequence list, 0 being the most recent.
- Log shows a load error (code A5 = fan error, sub code F1 = caused by the fan at the back connector plate).

The event log with the library also includes a date stamp for each event. Press *Enter* to display the associated timestamp in the following format:
ddd:hh:mm:ss:HH

where:

ddd	days
hh	hours
mm	minutes
ss	seconds
HH	1/100 second

A description of each error code and possible solution is provided in the following table.

Copyright 2018 FUJITSU LIMITED

4.6.2 Error Code Table

Table 4.4 Error codes

Error Code	Description	User Action
80	Barcode Reader Error, cannot initialize BCR	Retry operation; after several occurrences contact technical support
81	Barcode Reader Error, no response from BCR	Retry operation; after several occurrences contact technical support
82	EEPROM Error, no response from EEPROM (located on robotic controller)	Retry operation; after several occurrences contact technical support
83	Robotic controller generic problem	Reset the unit and retry operation. After several occurrences contact technical support
84	Setting of gripper motor parameters failed	Reset the unit and retry operation. After several occurrences contact technical support
85	Setting of slider motor parameters failed	Reset the unit and retry operation. After several occurrences contact technical support
86	Setting of elevator motor parameters failed	Reset the unit and retry operation. After several occurrences contact technical support
87	Setting of rotation motor parameters failed	Reset the unit and retry operation. After several occurrences contact technical support
88	Setting of sled motor parameters failed	Reset the unit and retry operation. After several occurrences contact technical support
89	Gripper blocked	Run 'Library Health Check', after several occurrences contact technical support
8A	Slider blocked	Run 'Library Health Check', after several occurrences contact technical support
8B	Elevator blocked	Run 'Library Health Check', after several occurrences contact technical support
8C	Rotation blocked	Run 'Library Health Check', after several occurrences contact technical support
8D	Sled blocked	Run 'Library Health Check', after several occurrences contact technical support
8E	Cannot find gripper block within the expected range	Run 'Library Health Check', after several occurrences contact technical support
8F	Cannot find slider block within the expected range	Run 'Library Health Check', after several occurrences contact technical support
90	Cannot find elevator block within the expected range	Run 'Library Health Check', after several occurrences contact technical support
91	Cannot find rotation block within the expected range	Run 'Library Health Check', after several occurrences contact technical support
92	Cannot find sled block within the expected range	Run 'Library Health Check', after several occurrences contact technical support
93	Gripper outside range, Gripper has reached a position beyond the expected range	Run 'Library Health Check', after several occurrences contact technical support
94	Slider outside range, Slider has reached a position beyond the expected range	Run 'Library Health Check', after several occurrences contact technical support
95	Elevator outside range, Elevator has reached a position beyond the expected range	Run 'Library Health Check', after several occurrences contact technical support

Copyright 2018 FUJITSU LIMITED

Error Code	Description	User Action
96	Rotation outside range, Rotation has reached a position beyond the expected range	Run 'Library Health Check', after several occurrences contact technical support
97	Sled outside range, Sled has reached a position beyond the expected range	Run 'Library Health Check', after several occurrences contact technical support
98	Cartridge present sensor not found	Run 'Library Health Check', after several occurrences contact technical support
99	Sled home sensor not found	Run 'Library Health Check', after several occurrences contact technical support
9A	Rotation home sensor not found	Run 'Library Health Check', after several occurrences contact technical support
9B	Sled position sensor (prism sensor) not found	Run 'Library Health Check', after several occurrences contact technical support
9C	Gripper range out of specification	Run 'Library Health Check', after several occurrences contact technical support
9D	Slider range out of specification	Run 'Library Health Check', after several occurrences contact technical support
9E	Elevator range out of specification	Run 'Library Health Check', after several occurrences contact technical support
9F	Rotation range out of specification	Run 'Library Health Check', after several occurrences contact technical support
A0	Sled range out of specification	Run 'Library Health Check', after several occurrences contact technical support
A1	Open mailslot (Import/Export Element) failed	Retry operation, after several occurrences contact technical support
B0	Robotic controller response timeout. A command did not complete in the required amount of time.	Reset the unit and retry operation. After several occurrences contact technical support
B1	NACK received from robotic controller	Reset the unit and retry operation. After several occurrences contact technical support
B2	Robotic controller communication failed	Reset the unit and retry operation. After several occurrences contact technical support
B3	Robotic controller urgent stop due to a released magazine	Check if magazines are completely inserted and retry operation. After several occurrences contact technical support
B4	Cartridge did not transport completely Gripper could not pick cartridge and CP sensor not present After pushing the cart CP sensor still present	Please contact technical support.
B5	Robotic controller doesn't respond on command	Reset the unit and retry operation. After several occurrences contact technical support
C0	Network initialization failed	Check network cable and network configuration. If the error recurs, contact technical support
C1	Telnet Interface initialization failed	Check network cable and network configuration. If the error recurs, contact technical support
C2	Webserver initialization failed	Check network cable and network configuration. If the error recurs, contact technical support
C6	Ping command did not reached target	Check network cable and network configuration. If the error recurs, contact technical support

Copyright 2018 FUJITSU LIMITED

Error Code	Description	User Action
C7	Cannot Upgrade from USB	Retry of Firmware upgrade, if not successful contact technical support
D0	ROM error. ROM checksum incorrect	Retry of Firmware upgrade, if not successful contact technical support
D1	RAM error. Power on Self Test (POST) has failed,	Retry operation; after several occurrences contact technical support
D2	NVRAM error. R/W operation to NVRAM has failed	Retry operation; after several occurrences contact technical support
D3	CTC Error. Timer unit has failed during POST.	Retry operation; after several occurrences contact technical support
D4	UART Error. Frame overrun or Parity Error on serial Interface.	Retry operation; after several occurrences contact technical support
D5	Display Error Communication to display failed	Retry operation; after several occurrences contact technical support
D6	Memory Error, Stack and heap overflow.	Retry operation; after several occurrences contact technical support
D7	Fatal system error	Retry operation; after several occurrences contact technical support
D8	Data base error	Retry operation; after several occurrences contact technical support
DA	In Library Verify Test the barcode reader has read different barcode data for the same cartridge label	Check barcode label on scratch cartridge and run Library Verify Test again. If the error recurs, contact technical support
DB	Warning event!	t. b. d.
DC	I^2C Bus Failure	Retry operation; after several occurrences contact technical support
DD	Warning event!	t. b. d.
DE	Warning event!	t. b. d.
DF	Warning event!	t. b. d.
E0	Incompatible magazine detected	Check type of lowest left magazine
F0	Drive Overtemperature Condition The subcode indicates which drive is affected Example: Subcode 01: drive #1	Check ambient temperature conditions and check all fans, after several occurrences contact technical support
F1	Drive Communication Error, Library controller has lost communication to drive The subcode indicates which drive is affected Example: Subcode 01: drive #1	Retry operation; if not successful contact technical support
F2	Drive Sled not present The subcode indicates which drive sled is affected Example: Subcode 01: drive sled #1	Retry operation; if not successful contact technical support
F3	Drive Hardware Error The subcode indicates which drive is affected Example: Subcode 01: drive #1	Cycle Power, after several occurrences contact technical support

Copyright 2018 FUJITSU LIMITED

Error Code	Description	User Action
F4	Drive Load Timeout Drive has run in a timeout while loading a tape The subcode indicates which drive is affected	Retry operation; if not successful contact technical support
F5	Drive Unload Timeout Drive has run in a timeout while unloading a tape The subcode indicates which drive is affected	Retry operation; if not successful contact technical support

Copyright 2018 FUJITSU LIMITED

Chapter 5

Servicing the Tape Library

5.1 Possible Tools Needed

- To service a library you may need one or more of the following tools:
  - Flat-blade screwdrivers (large and small)
  - #3 Phillips screwdriver
  - Cross-slot screwdriver
  - Ground strap

5.2 Electrostatic Discharge



CAUTION

A discharge of static electricity can damage static-sensitive devices or micro circuitry. Proper packaging and grounding techniques are necessary precautions to prevent damage.

- To prevent electrostatic damage, observe the following precautions:
  - Transport products in static-safe containers such as conductive tubes, bags, or boxes.
  - Keep electrostatic-sensitive parts in their containers until they arrive at static-free stations.
  - Cover the library with approved static-dissipating material. Provide a wrist strap connected to the work surface and properly grounded tools and equipment.
  - Keep the work area free of no conducting materials, such as ordinary plastic assembly aids and foam packing.
  - Make sure you are always properly grounded when touching a static-sensitive component or assembly.
  - Avoid touching pins, leads, or circuitry.
  - Use conductive field service tools.

Copyright 2018 FUJITSU LIMITED

5.3 Removing and Replacing a Tape Drive

Tape drives are installed at the back of the library.

When replacing one drive in a two drive configuration, you can power down the drive that you are replacing without interrupting power to the rest of the library.

Note

This part is hot pluggable. It is not mandatory to power down the library to replace a drive.

To remove a tape drive

Procedure

1 Using your Remote Management Unit or the Operator Control Panel, unload the tape cartridge(s) from the drive to be removed.

Figure 5.1 Drive sled components of rear panel

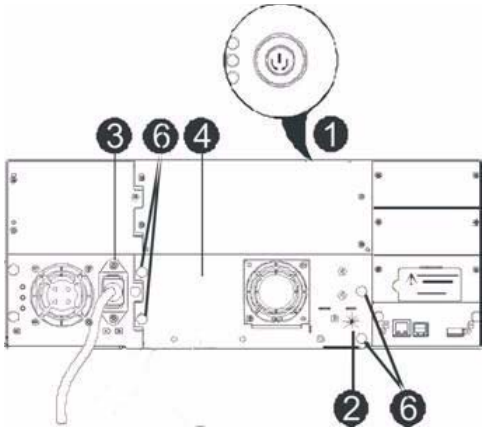

Table 5.1 Description for Figure 5.1

Steps	Description
1	Power down the library using the power button on the front pan.
2	The LED on the tape drive being removed is off.
3,4	Remove the power cable, if applicable from the tape drive being removed.
6	Loosen the captive thumbscrews on the drive.

Caution

Before pulling the lower drive sled please pull forward the product ID slide located below the drive sled (see Figure 5.2). Otherwise the slide or the attached label could be damaged.

Copyright 2018 FUJITSU LIMITED

2 Pull straight back on the tape drive handle to remove it from the library. Take care to slightly push down the product ID slide so it does not interfere with the drive sled (see Figure 5.2).

Figure 5.2 Tape drive removal

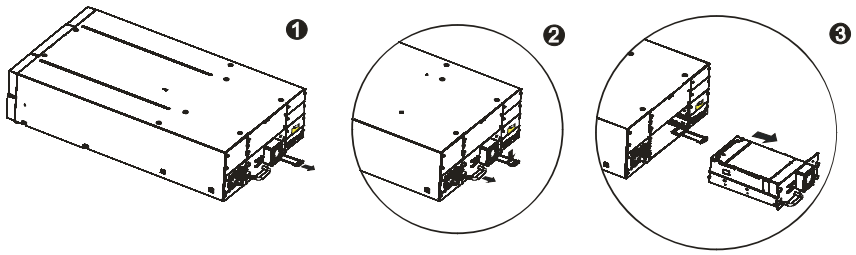

End of procedure

To replace a tape drive

Procedure

1 Before installing the new drive, inspect the connectors on the tape drive. Ensure that the connectors are intact, free of any foreign objects, and have no cracks or deformed or bent contacts.

2 Slowly insert the new tape drive into the drive bay, and align the connectors on the library while supporting the drive assembly (see Figure 5.3).

Figure 5.3 Installing a tape drive

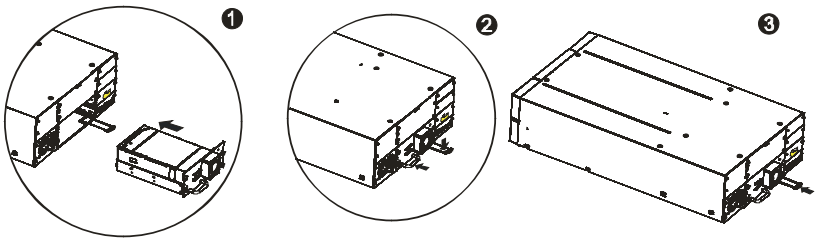

3 Push the tape drive slowly into the drive bay until the drive seats itself against the back of the library.

Note

If you are adding an additional tape drive to your library, or if you are upgrading an existing drive, be sure to use supported cabling configurations.

4 Push the Product ID Foil back underneath the drive sled. When inserted properly, only the handle of the Foil will be visible.

5 Tighten the captive thumbscrews until the drive is secure.

Copyright 2018 FUJITSU LIMITED

6 Connect the power cable.

7 Power on the library (or power on the drive; refer to section "3.5.6.3 Changing the Drive Configuration" (page 57)) using the power button on the front panel.

8 Run the Library Verify test.

End of procedure

5.4 Removing and Replacing the Library Controller

The library should only be removed by an experienced service technician.

To remove a library controller

The library controller is installed at the back of the library. Before you remove the library controller:

Procedure

1 Turn off power to the library (power button on the front panel).

2 Remove the power cord cable.

3 Loosen the two captive thumbscrews on the library controller (see Figure 5.4).

Figure 5.4 Position of the two thumbscrews

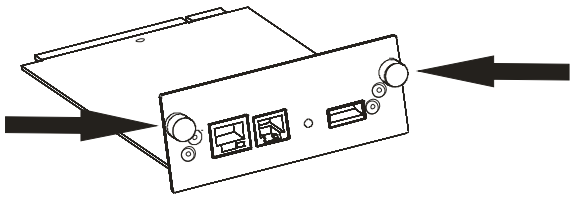

Copyright 2018 FUJITSU LIMITED

4 Pull straight back on the library controller to remove it from the library (see Figure 5.5).

Figure 5.5 Library controller removal

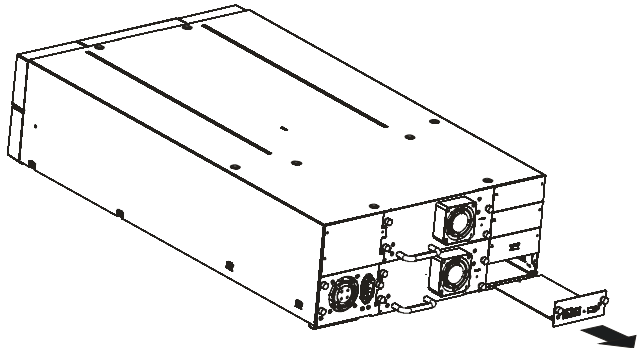

End of procedure

Replacing the library controller

Procedure

1 Unpack the new library controller from its package.

2 Slowly insert the new library controller into the bay, and align the connectors on the library while supporting the controller assembly.

3 Tighten the captive thumbscrews until the library controller is secure.

4 Replace the power cord cable.

5 Switch on power to the library (power button on the front panel).

End of procedure

The library maintains a backup of all Critical and Configuration Data separate from the library controller, so that when replacing the library controller, the Critical and Configuration data can be maintained and will not have to be entered manually again. When replacing a library controller, or a chassis FRU, there will be a mismatch between the data on the library controller and the backup data. When such a mismatch is detected, the user will be requested to determine which set of data is correct. If the library controller has been replaced, then select "Identity data mismatch" to copy the backup data onto the library controller. If the chassis FRU or Robotics FRU has been replaced (maintaining the original library controller), then select "Replace backup data".

Copyright 2018 FUJITSU LIMITED

5.5 Removing and Replacing a Power Supply

The power supply should only be removed by an experienced service technician.

To remove a power supply

Power supply is installed at the back of the library. Before you remove the power supply:

Procedure

1. Turn off power to the library (power button on the front panel).
2. Remove the power cord cable.
3. Loosen the three captive thumbscrews on the power supply (see Figure 5.6).

Figure 5.6 Position of the three thumbscrews

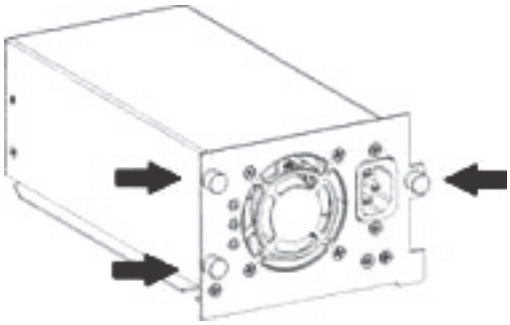

4. Pull straight back on the power supply to remove it from the library (see Figure 5.7).

Figure 5.7 Power supply removal

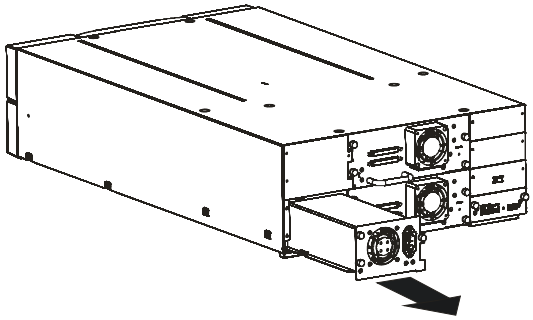

End of procedure

Copyright 2018 FUJITSU LIMITED

Replacing the power supply

Procedure

1. Unpack the new power supply from its package.
2. Slowly insert the new power supply into the bay, and align the connectors on the library while supporting the power supply assembly.
3. Tighten the captive thumbscrews until the power supply is secure.
4. Replace the power cord cable.
5. Switch on power to the library (power button on the front panel).

End of procedure

5.6 Replacing a Redundant Power Supply

Note

The second power supply can be installed without powering down the library.

Figure 5.8 Replacing a redundant power supply

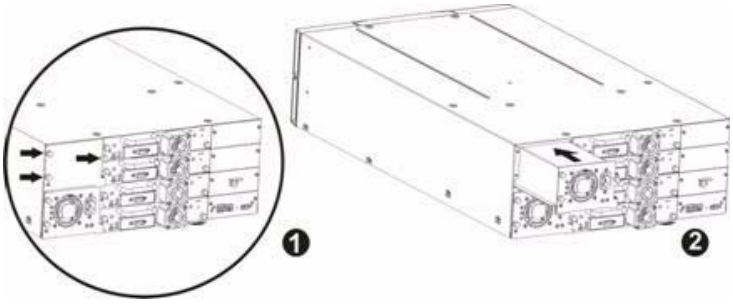

Procedure

1. Loosen the three screws on the library see Figure 5.8, step 1).
2. Unpack the redundant power supply from its package.
3. Slowly insert the new power supply into the bay (see Figure 5.8, step 2),
4. and align the connectors on the library while supporting the power supply assembly.

Copyright 2018 FUJITSU LIMITED

5 Tighten the captive thumbscrews until the power supply is secure.

End of procedure

5.7 Removing and Replacing a Magazine Using the OCP

> ⚠ WARNING
>
> The magazine must only be removed manually in an emergency. Failure to follow normal procedure can cause data loss and equipment damage.
>
> The magazines should be released using the Operator Control Panel (OCP) or the Remote Management Unit (RMU). Recommends that you release the magazine using the OCP or RMU, however, if the OCP process fails, or if the magazine needs to be removed when the power to the tape Library is off, you can manually release the magazines.
>
> This OCP option lets you gain access to the left and right magazine. Access to the magazines requires the use of the Administrative password.
>
> When inserting the magazine, push the magazine into the tape library slowly and carefully.

To remove a magazine

Procedure

1 From the Home screen, press "Previous" or "Next" on the OCP until the screen displays *Operations*.

2 Press "Enter" to select.

3 Press "Up" or "Down" until the screen displays either *Unlock Left Magazine*, or *Unlock Right Magazine*.

4 Press "Enter" to select the desired magazine to unlock.

5 Enter the Administrative password if requested.

6 The display will read *Left Magazine Unlocked*, or *Right Magazine Unlocked*.

7 Pull the released magazine out of the Library.

Copyright 2018 FUJITSU LIMITED

8 The screen will now display *Insert Left Magazine*, or *Insert Right Magazine*. The Library cannot perform any other operation until the magazine is replaced. After exchanging tapes in a magazine, slide the magazine completely into the Library. Pull lightly on the magazine to check that it is locked. The magazine will lock into place once it is correctly installed and the Library will inventory the magazine.

End of procedure

5.8 Removing and Replacing a Magazine Using the RMU

Procedure

1 To login, enter the correct password, and press Enter.

Figure 5.9 RMU login page



2 Go to Operations > Magazines. This page (see Figure 5.10) allows the user to release the right or left magazine from the Library.

3 Press the Release button.

Copyright 2018 FUJITSU LIMITED

Figure 5.10 ETERNUS LT40 S2: Operations, Magazine page

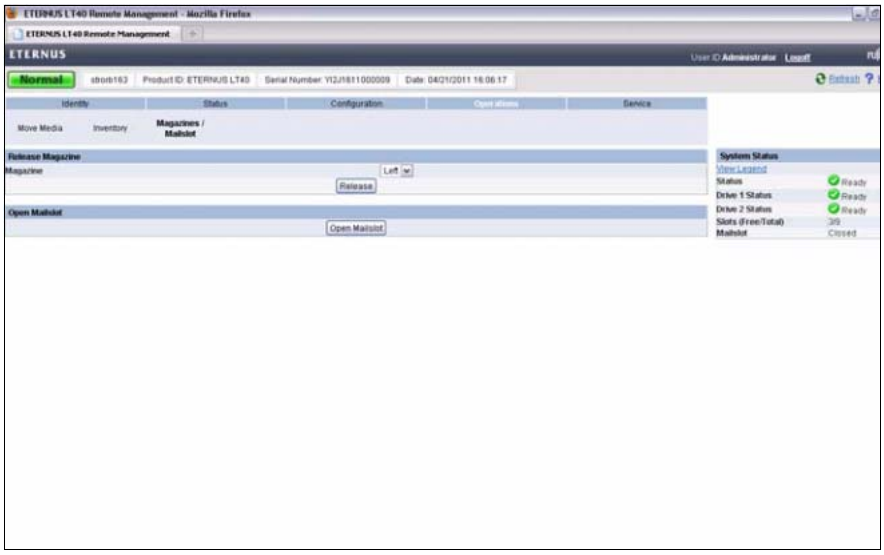

End of procedure

5.9 Removing and Replacing the Base Chassis

You will need a #3 Phillips screwdriver to remove and replace the base chassis assembly. Before beginning, be sure the tape drive or drives do not contain a tape cartridge. To remove a cartridge, see section "3.5.7.1 Moving Media Within the Library" (page 66).

To remove the components in the base chassis and the base chassis from the rack

Procedure

1. Obtain adequate assistance to lift and stabilize the library during removal and replacement.
2. Remove the magazines from the library.
3. Turn off power to the library and disconnect all cables.
4. Remove the library from the rack:
   - From the front of the library loosen the two screws anchoring the mounting brackets on the library to the rack. These are captive screws and cannot be removed.
   - Remove your library from the rack.
5. Remove the replacement library enclosure from the packing materials.
6. Place the replacement library enclosure on a solid surface in preparation for installation in to the rack.

Copyright 2018 FUJITSU LIMITED

7 Remove the mounting brackets and guide pulleys from your library and install them on the replacement library.

8 Loosen the blue thumbscrews on the power supply, and pull the power supply from your library.

9 Install the power supply in your replacement library.

10 Loosen the blue thumbscrews on the tape drive, and pull the tape drive handle while supporting the bottom of the drive to remove from your library.

11 Install your drive in the replacement library enclosure.

12 Loosen the blue thumbscrews on the Library controller and remove the controller from the Library.

13 Install the Library controller in your replacement Library.

14 Remove the lock on the rear panel.

15 Store the lock and label to the top cover (see Figure 7.1).

16 Slide the replacement Library enclosure onto the metal rails that are already in position in the rack.

17 Tighten the mounting bracket screws to anchor the replacement Library enclosure to the rack.

18 Plug in the power cord and host interface cable into the replacement Library enclosure.

19 Power on the Library.

20 Run the "Library Health Check".

21 Securely package the Library enclosure that was replaced, and return to repair center (see "Chapter 7 Packaging Before Transportation" (page 104)).

End of procedure

5.10 Adding a New License Key

The basic models of ETERNUS LT libraries are delivered with a certain number of magazines.

If you want an upgrade (additional magazines), you have to buy a license from Fujitsu. Fujitsu will send you a TAN, and in return you will receive a valid license number for the additional magazine.

Serial number

In order to get a new license key, it is presupposed to know the serial number of your system. The different methods to get the serial number you will find in the section "5.11 How to Get the Serial No. in Storage Systems" (page 101).

Copyright 2018 FUJITSU LIMITED

There are 2 different ways to enter the license key in your tape library:

- via Operator Control Panel (OCP)
- via Remote Management Unit (RMU)

5.10.1 Sequence of Installation

Cartridges are stored in magazines. Up to 12 cartridges can be stored in each magazine. Magazines may be removed and inserted individually. For each new magazine a new license key is requested.

The sequence of installation is always the same:

- Installation in a device with 2HU:
  - Delivery:
    1. magazine on the left hand side
  - Upgrade:
    2. magazine on the right hand side
- Installation in a device with 4HU:
  - Delivery:
    1. magazine on the bottom left
    2. magazine on the top left
  - Upgrade:
    3. magazine on the bottom right
    4. magazine on the top right

5.10.2 Add a License Key via OCP

The following figure shows the front panel LCD with 4 buttons on the right hand side.

Figure 5.11 Control keys on the front panel

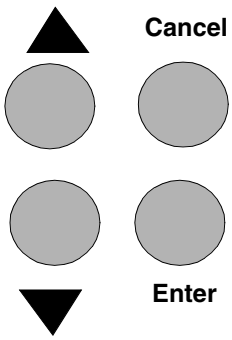

- Next button [▼]
  The Next button is used to navigate through the menu or license key.
- Previous button [▲]
  The Previous button is used to navigate backward through the menu or the license key.
- Enter button
  The Enter button is used to execute the action.
- Cancel button
  The Cancel button is used to cancel a user input and return to the last menu item.

Copyright 2018 FUJITSU LIMITED

5.10.2.1 Menu to Change the License Key

If you switch on the front panel LCD, the front panel LED *Ready* is lit and the Home Screen is displayed.

Procedure

1. Press *Enter* to get to the main menu.
2. Use the Next button [▼] to choose *Configuration*.

Figure 5.12 Menu item *Configuration*



3. Press *Enter*, and choose *Add License Key* in the submenu.

Figure 5.13 Menu item *Add License Key*



The 15-digit license key is displayed.

Copyright 2018 FUJITSU LIMITED

Figure 5.14 License key



4 Use the Next button [▼] and the Previous button [▲] to choose the requested digit for the key (alphabetic or numeric character). Press *Enter* to move to the next digit or *Cancel* to get back.

5 If the license key is complete, choose *Activate*.

End of procedure

After activation of the license key a reboot is requested. You have 3 different possibilities to start the reboot:

- Reboot via OCP.
- Power cycle the storage system.
- Reboot via RMU (see Figure 5.18).

Copyright 2018 FUJITSU LIMITED

5.10.3 Add the License Key via RMU

To login, select the access type and enter the correct password. There are three levels of access:

- Standard user level
- Admin user level
- Service personnel user level. Access to this level is by Service personnel only.

Procedure

1 You have to be Admin user to add a new license key .

Figure 5.15 RMU login page



2 Choose *Configuration* > *License Key* from the Menu.

Figure 5.16 RMU: Configuration

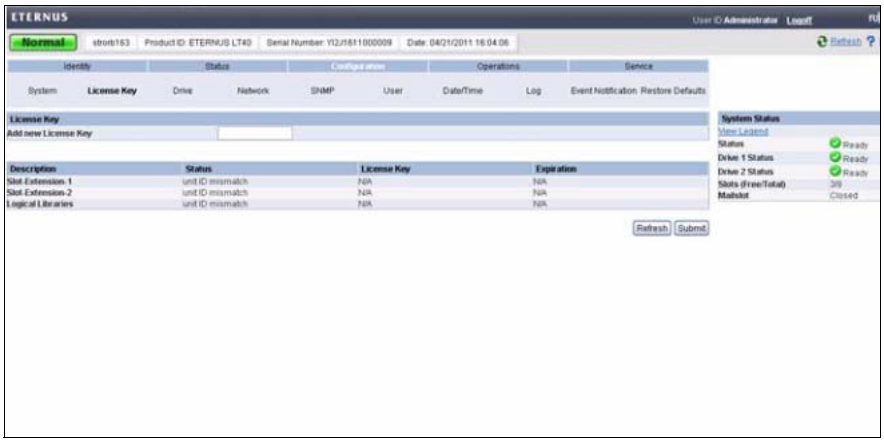

Copyright 2018 FUJITSU LIMITED

3 Add the new license key.

After confirming the key, the licensed functions (activated magazines or partitions) are displayed in a table in the bottom line.

You are asked, whether you are sure that the new license key is correct:

Figure 5.17 Confirmation of license key

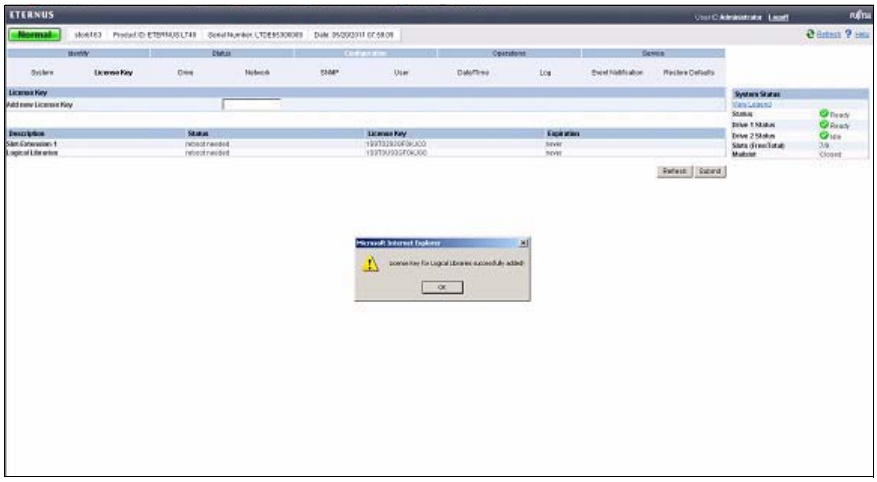

4 You are requested to reboot the system:

Figure 5.18 Request for reboot

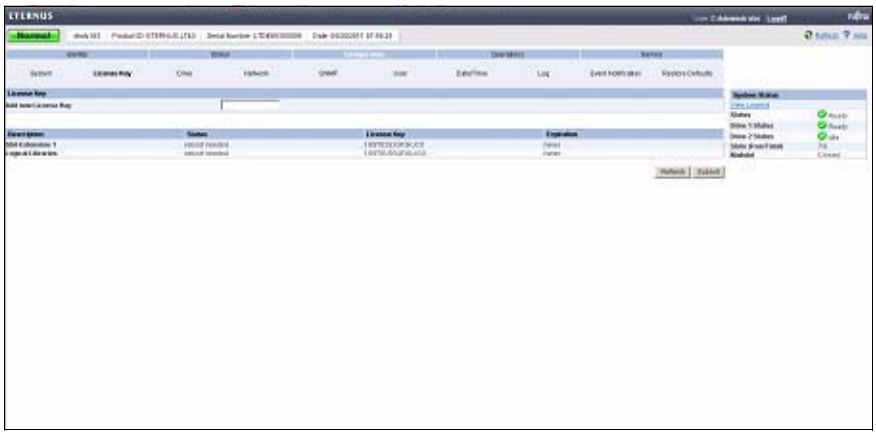

If you press *Refresh*, a reboot is executed.
After confirmation the license key is added.

End of procedure

Copyright 2018 FUJITSU LIMITED

5.11 How to Get the Serial No. in Storage Systems

There are different situations, when it is presupposed to know the serial number of your system, e.g. adding a new license key or sending back the system in case of reclamation. This document describes three different methods to get the serial number of ETERNUS LT20 S2, ETERNUS LT40 S2 and ETERNUS LT60 S2 devices.

Procedure

1 Read the serial number from the flap on the rear of the device

In the following picture you see the flap on the rear of the device. If you pull it out, you will find the serial number on it.

Figure 5.19 Flap with serial number

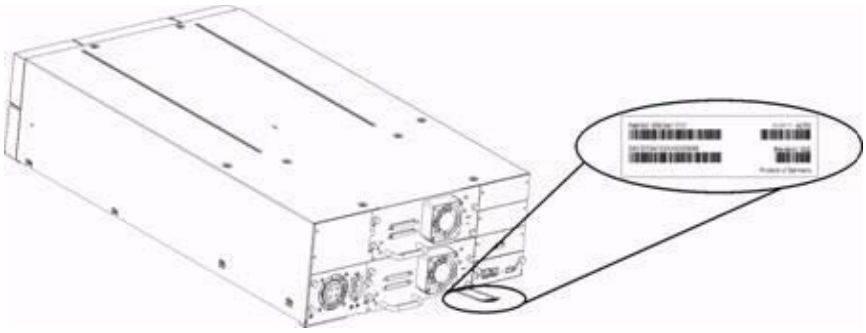

Caution

Please make sure that the serial number starts with "LTDE ...". If the serial number starts with "LS ...", it is a spare part of the technical service. In this case you get the original serial number of the system as described under point Step 2 or Step 3.

Copyright 2018 FUJITSU LIMITED

2 Get the serial number of the system via Remote Management

When starting the Remote Management Unit (RMU), you see the serial number of the storage systems on the starting page (choose Identity - Library). You will find the serial number in the first line.
If the unit has more than one partition the properties of all logical libraries are displayed.

Figure 5.20 Serial number via RMU

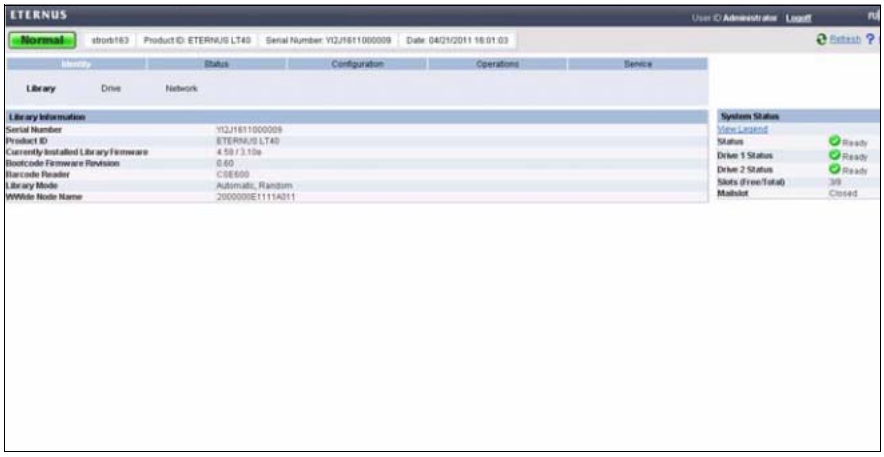

3 Get the serial number of the system via Operation Control Panel

The following figure shows the front panel LCD with 4 buttons on the right hand side.

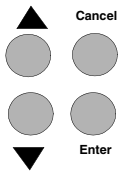	Next button [▼] is used to navigate through the menu or license key.
	Previous button [▲] is used to navigate backward through the menu or license key.
	Enter button is used to execute the action.
	Cancel button is used to cancel a user input and return to the last menu item.

End of procedure

Menu to get the serial number

- Select Information from the main menu. Press Enter.
- Select Library from the submenu. Press Enter.
- Select Identity. Press Enter.

The serial number will be displayed in the first line.

Copyright 2018 FUJITSU LIMITED

Chapter 6

Technical Specifications

You find the technical data of the libraries, the types of drives you can use and their performance characteristics in the "DATSHEET FUJITSU ETERNUS LT40 S2" and "DATSHEET FUJITSU ETERNUS LT60 S2" which are available at:

http://www.fujitsu.com/global/products/computing/storage/tape/eternus-lt/lt40/ and
http://www.fujitsu.com/global/products/computing/storage/tape/eternus-lt/lt60/ respectively.

Copyright 2018 FUJITSU LIMITED

Chapter 7
Packaging Before Transportation

Caution

If you need to transport the library, it is recommended that the shipping lock and label is replaced on the top cover (see Figure 7.1).

Procedure

1. Please disconnect the Library.
2. Remove the yellow label and the shipping lock. The shipping lock is stored on the rear panel (see Figure 7.1).
3. Store the lock and the label on the top cover.
   The shipping lock prevents the robotic mechanism from moving during shipment.

Figure 7.1 Replacing shipping lock before transportation

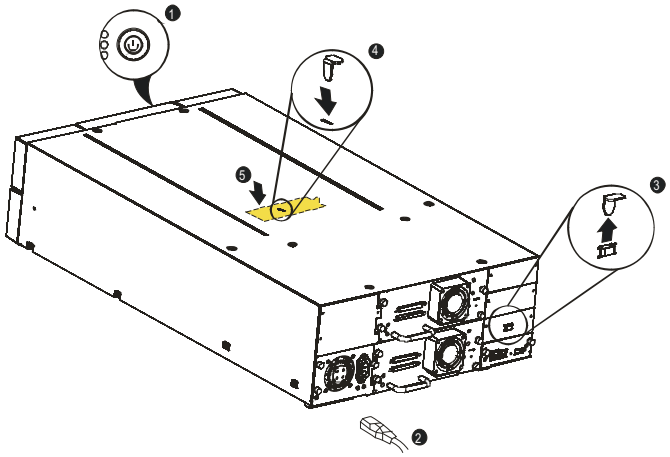

4. Before sending the defect Library back, please contact the service department to give the informations of the Part and Serial Numbers (see Figure 7.2).

Copyright 2018 FUJITSU LIMITED

Figure 7.2 Product label

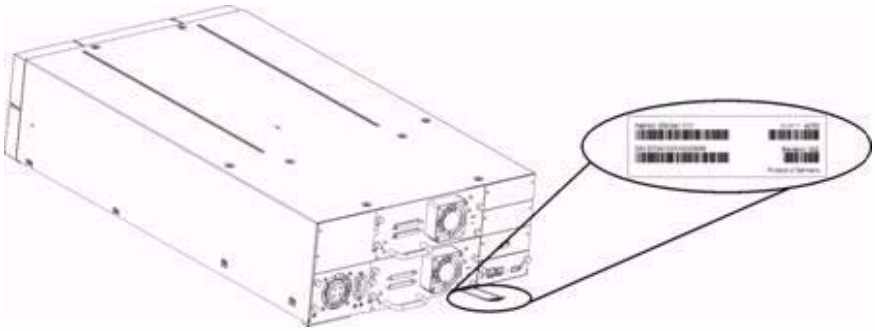

5 Package the tape Library. Please use the original Box (see Figure 7.3).

Figure 7.3 Re-Packaging the library

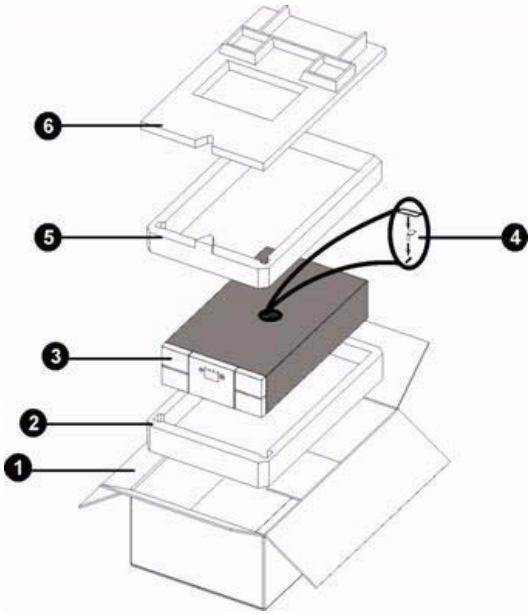

Table 7.1 Re-Packaging description

No.	Description
1	Box
2	Bottom shell
3	Unit
4	Shipping lock
5	Middle shell
6	Top shell

6 Send the Library to the service center.

End of procedure

Copyright 2018 FUJITSU LIMITED

Chapter 8

Recycling and Disposal

Caution

Disposal of Waste Equipment by Users in Private Households in the European Union and Norway.

Figure 8.1 WEEE symbol



This symbol on the product or on its packaging indicates that this product must not be disposed of with your other household waste. Instead, it is your responsibility to dispose of your equipment by handling it over to a designated collection point for the recycling of waste electrical and electronic equipment. The separate collection and recycling of your waste equipment at this time of disposal will help to conserve natural resources and ensure that it is recycled in a manner that protects human health and the environment. For more information about where you can drop off your waste equipment for recycling, please contact your local city office, your household waste disposal service or the shop where you purchased the product.

Copyright 2018 FUJITSU LIMITED

Chapter 9
Regulatory Information

This section describes the tape Library compliance with safety and regulatory agency standards:

CAUTION

To comply with the following regulations and standards, the tape Library must be properly installed in an office or industrial environment with shielded cables and adequate grounding of the bus and the input power.

9.1 Device Standards

Table 9.1 IEC 60297 rack standards

Countries	Standard (by BDT)
USA/Canada	FCC, ETL, CS AUS
European Union	CE
Germany	GS Semco

Copyright 2018 FUJITSU LIMITED

9.2 FCC (United States)

The computer equipment described in this manual generates and uses radio frequency (RF) energy. If the equipment is not installed and operated in strict accordance with the manufacturer's instructions, interference to radio and television reception might result.

FC	Tested To Comply With FCC Standards For Home or Office Use

This equipment complies with Part 15 of the FCC Rules. Operation is subject to the following conditions: (1) This device may not cause harmful interference, and (2) this device must accept any interference received, including interference that may cause undesired operation.
Part 15, Class A, of the FCC Rules, is designed to provide reasonable protection against radio and television interference in a residential installation. Although the equipment has been tested and found to comply with the allowed RF emission limits, as specified in the above cited Rules, there is no guarantee that interference will not occur in a particular installation. Interference can be determined by turning the equipment off and on while monitoring radio or television reception. The user may be able to eliminate any interference by implementing one or more of the following measures:

- Reorient the affected device and/or its receiving antenna.
- Increase the distance between the affected device and the computer equipment.
- Plug the computer and its peripherals into a different branch circuit from that used by the affected device.
- If necessary, consult an experienced radio/television technician for additional suggestions.

9.3 Canadian Verification

This Class A digital apparatus meets all requirements of the Canadian Interference-Causing Equipment Regulations (ICES-003, Class A)

9.4 CE Notice

This ETERNUS LT40 S2/LT60 S2 LTO Library product conforms to the following European Directive(s) and Standard(s): Application of Council Directives: 73/23/EEC, 89/336/EEC. Standards to which Conformity is declared: EN60950, EN55022, EN55024, EN61000-3-2, EN61000-3-3.

Copyright 2018 FUJITSU LIMITED

FUJITSU Storage ETERNUS LT40 S2/LT60 S2 LTO Library
Installing, Starting Up and Maintaining

P3AM-5392-07ENZ0

Date of issuance: April 2018
Issuance responsibility: FUJITSU LIMITED

- The content of this manual is subject to change without notice.
- This manual was prepared with the utmost attention to detail.
  However, Fujitsu shall assume no responsibility for any operational problems as the result of errors, omissions, or the use of information in this manual.
- Fujitsu assumes no liability for damages to third party copyrights or other rights arising from the use of any information in this manual.
- The content of this manual may not be reproduced or distributed in part or in its entirety without prior permission from Fujitsu.


FUJITSU