FUJITSU

shaping tomorrow with you

ETERNUS LT20 S2, LT40 S2 and LT60 S2

Technical Product Introduction

Copyright Fujitsu, Release June 2015

ETERNUS Entry Tape Libraries

- ETERNUS LT20 S2



- ETERNUS LT40 S2



- ETERNUS LT60 S2



Copyright Fujitsu, Release June 2015

Unpacking / Packing for Transportation

Note: For shipping use only original packing!

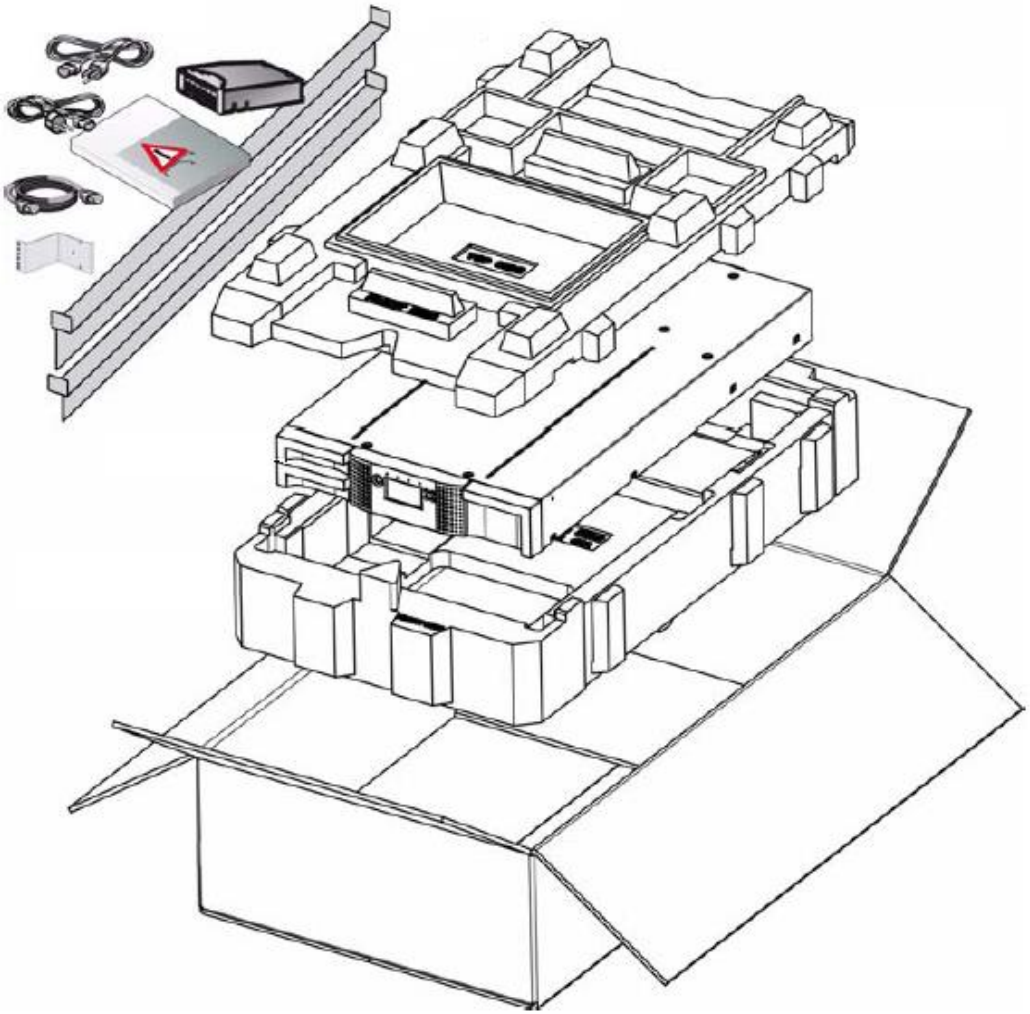

Copyright Fujitsu, Release June 2015

ETERNUS LT20 S2: Installation

1. Remove the yellow label that is securing the shipping lock on the top of the system
2. Remove the shipping lock

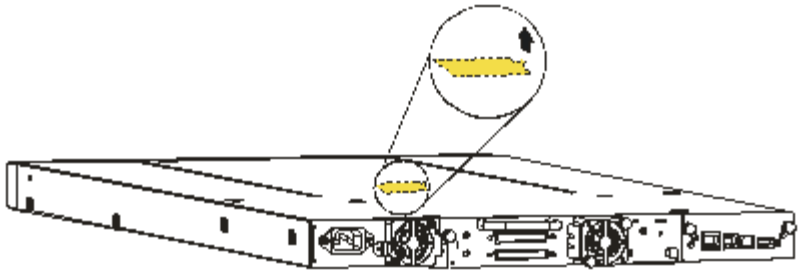

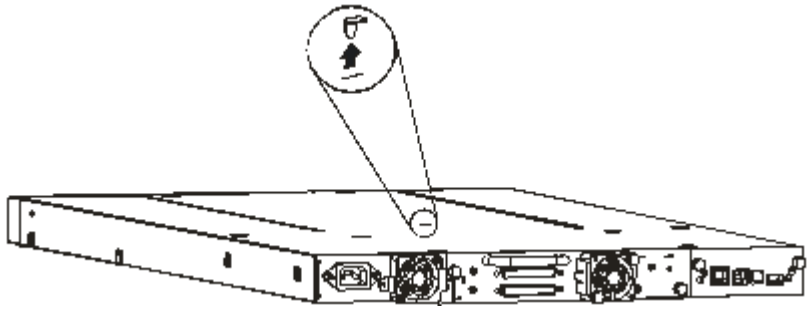

3. Replace the label on the top cover
4. Store the shipping lock next to power supply

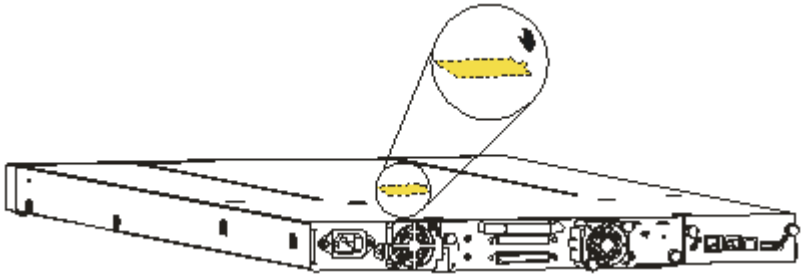

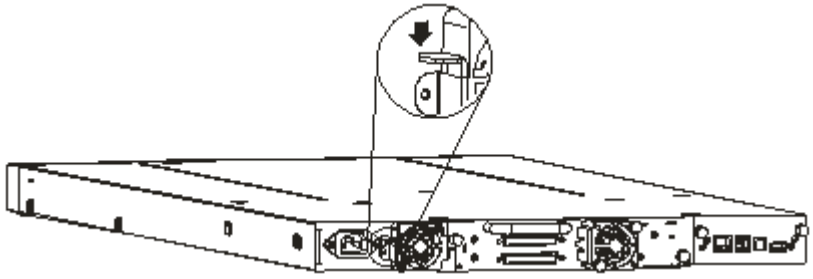

Copyright Fujitsu, Release June 2015

ETERNUS LT40 S2 and LT60 S2: Installation

1. Remove the yellow label that is securing the shipping lock on the top of the system
2. Remove the shipping lock
3. Replace the label on the top cover

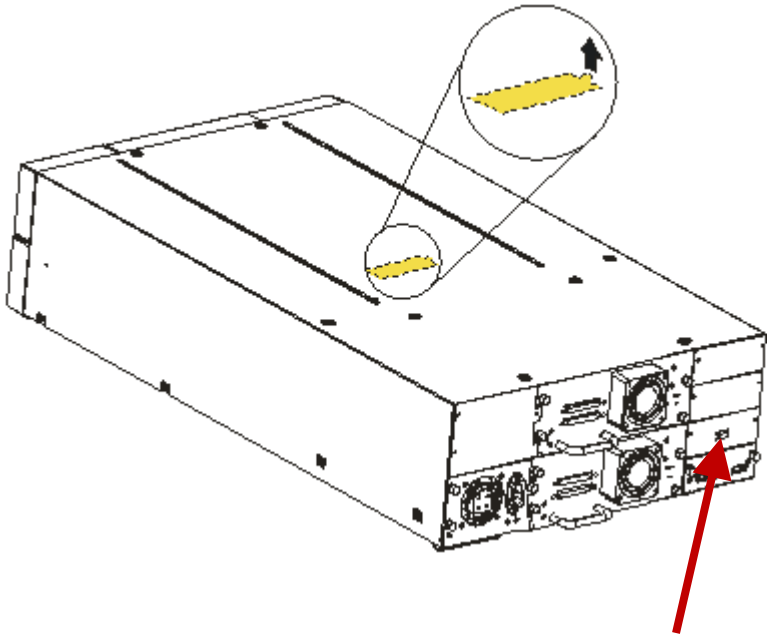

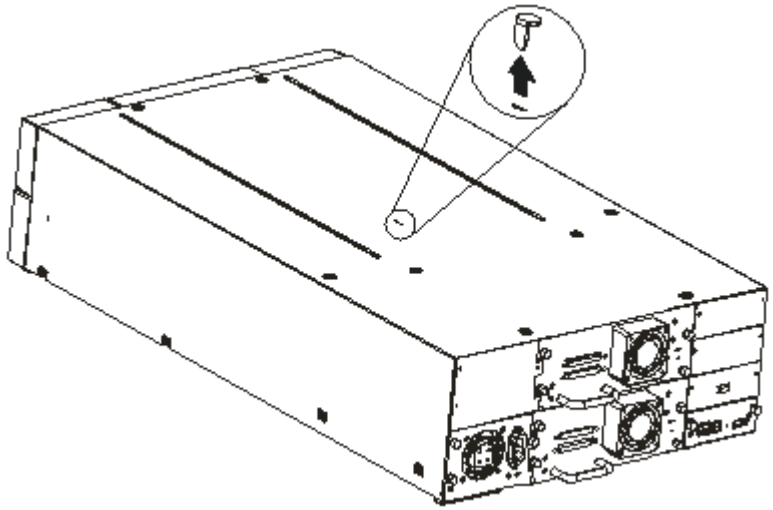

4. Store the shipping lock here

Copyright Fujitsu, Release June 2015

ETERNUS LT20 S2: Overview

ETERNUS LT20 S2 with LTO-4, LTO-5 or LTO-6	
Library	1U form factor library with barcode reader
Max. capacity LTO-4 HH (8 Cartridges)	Native: 6,4 TB Compressed: 12,8 TB (assumed compression factor 2)
Max. capacity LTO-5 HH (8 Cartridges)	Native: 12 TB Compressed: 24 TB (assumed compression factor 2)
Max. capacity LTO-6 HH (8 Cartridges)	Native: 20 TB Compressed: 50 TB (assumed compression factor 2.5)
Max. transfer speed LTO-4 HH LTO-5 HH LTO-6 HH	 Native: 80 MB/s (288 GB/h) Compressed: 160 MB/s (576 GB/h) Native: 140 MB/s (504 GB/h), compressed: 280 MB/s (1008 GB/h) Native: 160 MB/s (576 GB/h), compressed: 400 MB/s (1440 GB/h)
Drive types	SAS: LTO-4 (HH), LTO-5 (HH) or LTO-6 (HH) FC: LTO-4 (HH), LTO-5 (HH) or LTO-6 (HH) All drives utilize ADI technology (ADI = Automation Drive Interface)
Number of slots	8 (incl. Mail Slot)
Number of magazines	2 removable Magazines (each for 4 cartridges - 1 Mail Slot in left Magazine)
USB interface	1
RMU	Remote Management Unit, built-in management GUI
MSBF	500,000 swaps
Interface	SAS / FC interface

Copyright Fujitsu, Release June 2015

ETERNUS LT40 S2/60 S2: Overview

ETERNUS LT40 S2 and LT60 S2 with LTO-4, LTO-5 or LTO-6	
Library	2U and 4U form factor library with barcode reader
Max. capacity LTO-4	Native: 19.2 TB (24 Cartridges) / 38,4 TB (48 Cartridges) Compressed: 38.4 TB (24 Cartridges) / 76,8 TB (48 Cartridges)
Max. capacity LTO-5	Native: 36 TB (24 Cartridges) / 72 TB (48 Cartridges) Compressed: 72 TB (24 Cartridges) / 144 TB (48 Cartridges)
Max. capacity LTO-6	Native: 60 TB (24 Cartridges) / 120 TB (48 Cartridges) Compressed: 150 TB (24 Cartridges) / 300 TB (48 Cartridges)
Max. transfer speed	LTO-4 HH: Native: 80 MB/s (288 GB/h) Compressed: 160 MB/s (576 GB/h) LTO-5 FH/HH: Native: 140 MB/s (504 GB/h) Compressed: 280 MB/s (1008 GB/h) LTO-6 HH: Native: 160 MB/s (576 GB/h) Compressed: 400 MB/s (1440 GB/h)
Drive types	SAS: LTO-4 [1)] (HH), LTO-5 (HH/FH) or LTO-6 (HH) FC: LTO-4 [1)] (HH), LTO-5 (HH/FH) or LTO-6 (HH) All drives utilize ADI technology (ADI = Automation Drive Interface)
Number of slots	24 / 48 (incl. mail slot)
Number of magazines	2 (LT40) or 4 (LT60) removable Magazines (each for 12 Cartridges - 1 mail slot for 3 Cartridges in left magazine)
USB interface	1
RMU	Remote Management Unit, built-in management GUI
MSBF	1.000.000 swaps
Interface	SAS 3/6 Gbit/s / Fibre Channel 4/8 Gbit/s

[1)] LTO-4 Full Height (FH) discontinued beginning of 2013.

Copyright Fujitsu, Release June 2015

ETERNUS LT40/60 S2: Partitioning

- ETERNUS LT40 S2 and LT60 S2 support partitioning, so that the library can be used by two or more separate applications
- This solution also allows mixing different drive technologies
- Requirements
  - Partitioning license has to be activated
  - All slots must be activated (slots 1 to 24 or 48)
  - Minimum of two drives are needed

Copyright Fujitsu, Release June 2015

Identification

- Product / serial number (in the rear of the unit)



 Copyright Fujitsu, Release June 2015

ETERNUS LT20 S2: Exterior Front View

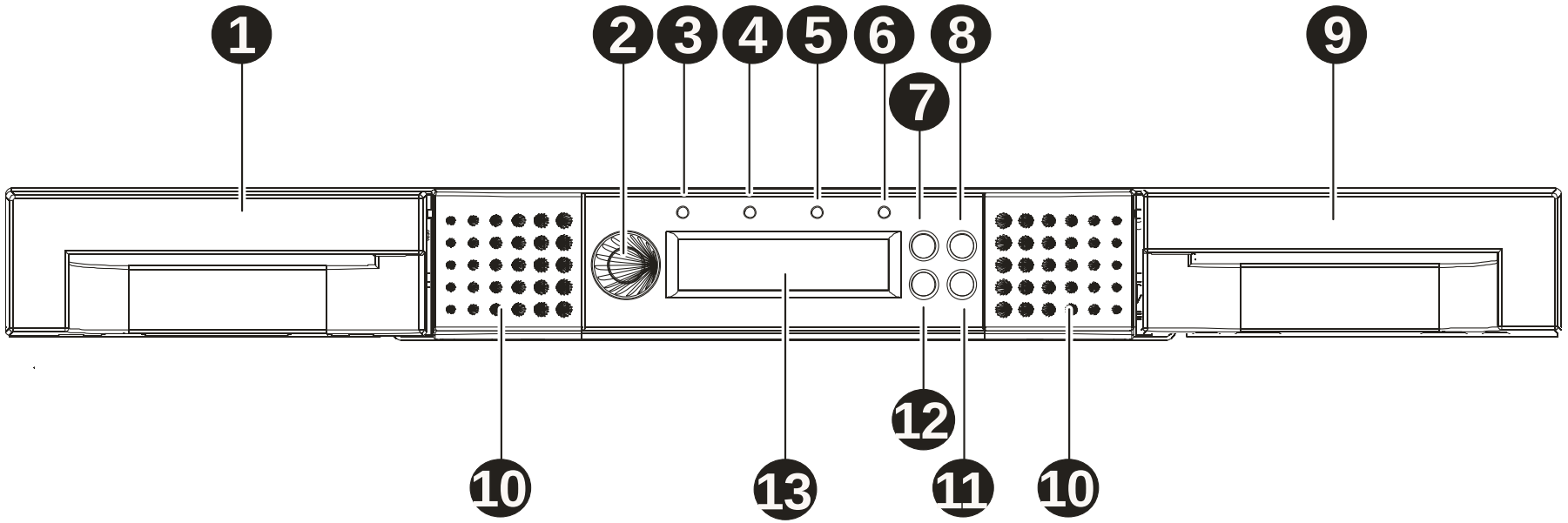

- 1. Left Magazine (incl. Mail Slot)
- 2. Power on/off switch
- 3. Ready LED
- 4. Clean LED
- 5. Attention LED
- 6. Error LED
- 7. Up-key
- 8. Cancel-key
- 9. Right Magazine
- 10. Air intakes
- 11. Enter-key
- 12. Down-key
- 13. Display

Copyright Fujitsu, Release June 2015

ETERNUS LT40/60 S2: Exterior Front View

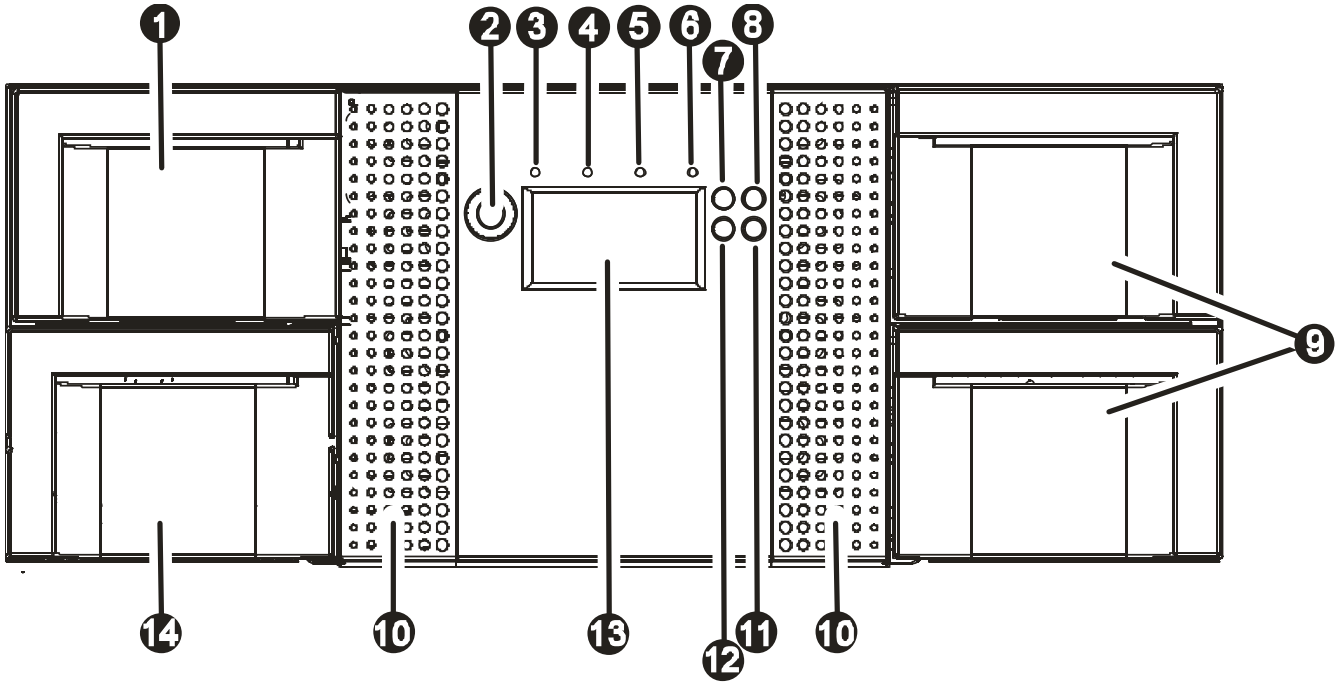

- 1. Left upper magazine
- 2. Soft power (on/off)
- 3. Ready LED
- 4. Clean LED
- 5. Attention LED
- 6. Error LED
- 7. Up-key
- 8. Cancel-key
- 9. Right Magazines
- 10. Air intake
- 11. Enter-key
- 12. Down-key
- 13. Display
- 14. Left lower Magazine with Mail Slot

Copyright Fujitsu, Release June 2015

ETERNUS LT20 S2: Exterior Rear View

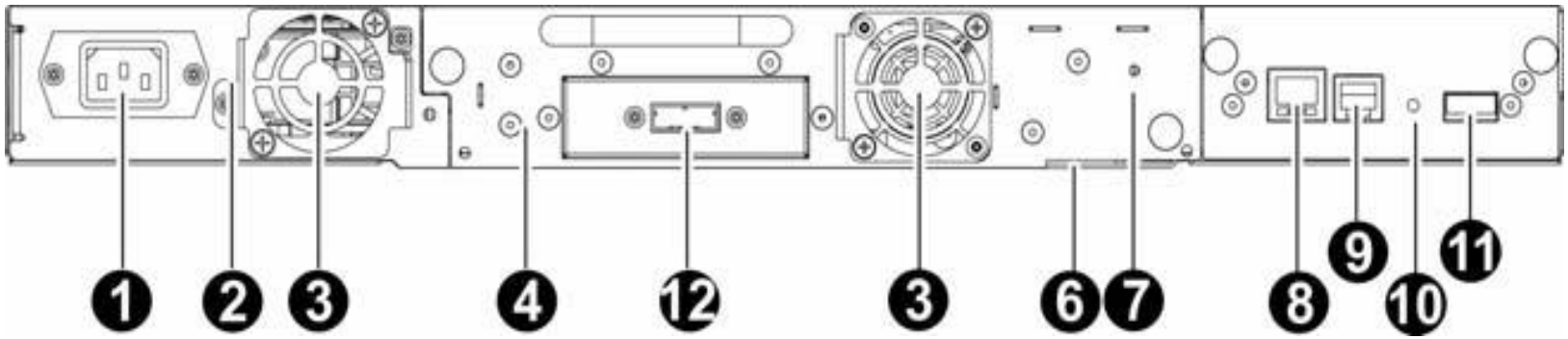

- 1. Power input 110 - 240 V
- 2. Shipping key holder
- 3. Fans
- 4. Drive sled
- 5. SAS interface
- 6. Product/Serial number
- 7. Drive power LED
- 8. Ethernet (RMU)
- 9. Serial link
- 10. Controller activity
- 11. USB interface

Copyright Fujitsu, Release June 2015

ETERNUS LT40 S2: Exterior Rear View

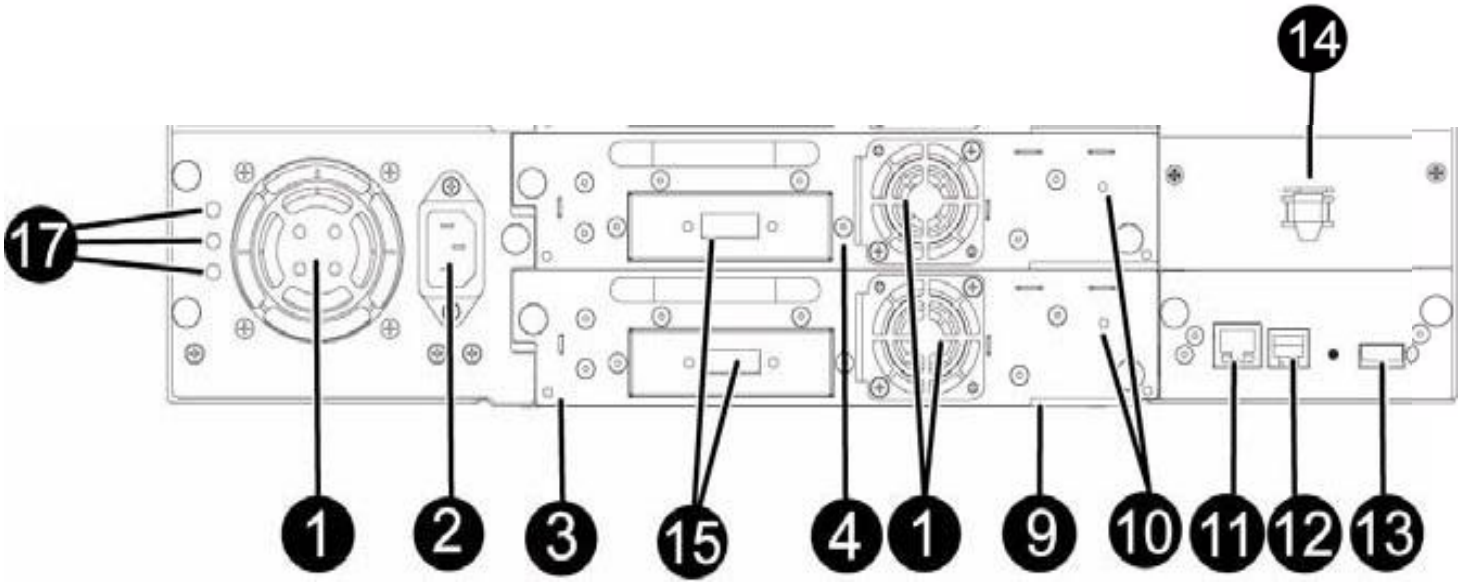

- 1. Fans
- 2. Power input 110 - 240 V
- 3. Lower and Upper drive sled
- 4. Tape drives
- 9. Product/Serial number
- 10. Drive power LED
- 11. Ethernet (RMU)
- 12. Serial link
- 13. USB interface
- 14. Shipping key holder
- 15. SAS interface
- 17. Power Supply LEDs

Copyright Fujitsu, Release June 2015

ETERNUS LT60 S2: Exterior Rear View

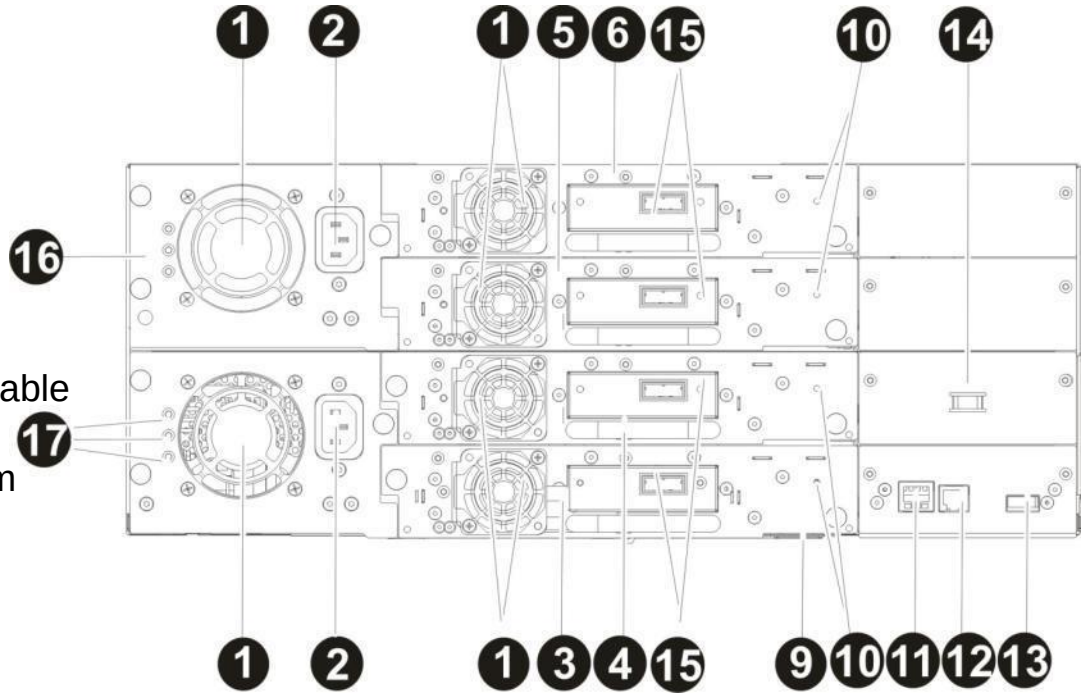

LEDs:
blue: Power available
green: Voltage OK
yellow: Fan problem

- 1. Fans
- 2. Power inputs 110-240 V
- 3. First drive sled
- 4. Second drive sled
- 5. Third drive sled
- 6. Fourth drive sled
- 9. Product/Serial number
- 10. Drive power
- 11. Ethernet (RMU)
- 12. Serial link
- 13. USB interface
- 14. Shipping key holder
- 15. SAS interface
- 16. Power supplies
- 17. Power supply LED

Copyright Fujitsu, Release June 2015

Fibre Channel Interface

- 4 Gb/s for LTO-3 and LTO-4
- 8 Gb/s for LTO-5 and LTO-6
- Direct connection

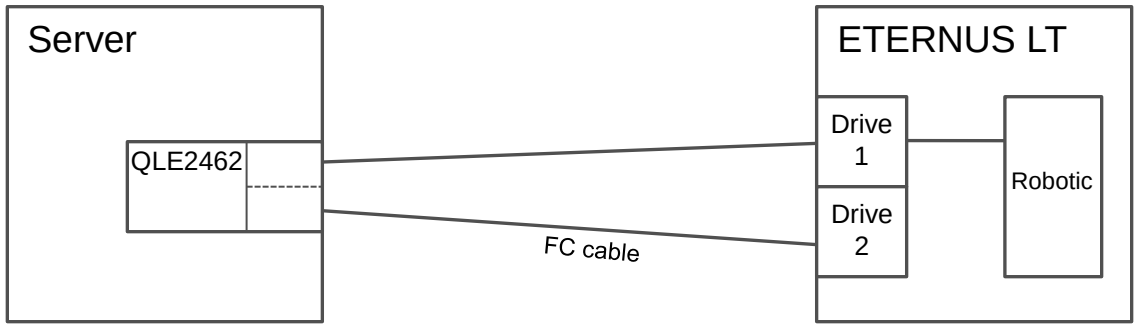

- Connection via switch

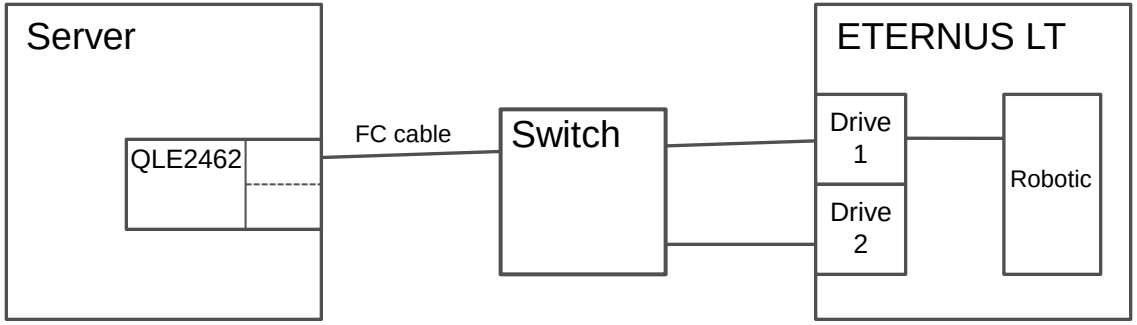

Copyright Fujitsu, Release June 2015

SAS Interface and Connectors

- 3 Gb/s interfacce for LTO-3 and LTO-4

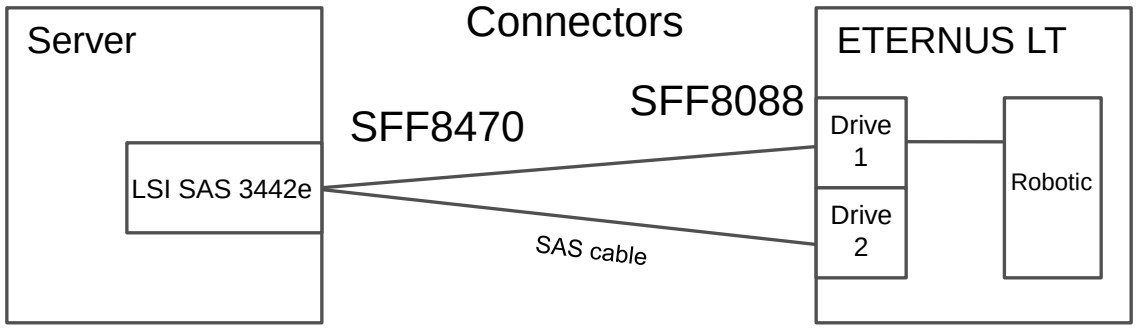

SFF 8470



- 6 Gb/s interface for LTO-5 and LTO-6

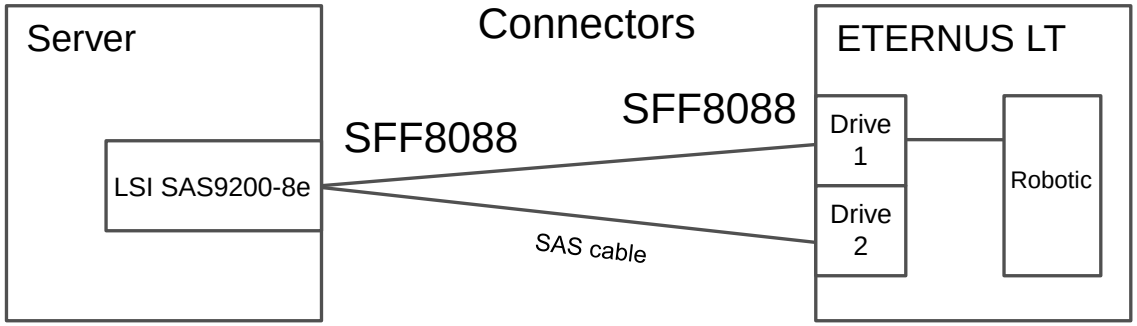

SFF 8088



Copyright Fujitsu, Release June 2015

SAS Cable



Cables	Rack Cabling	Description
D:KBSAS1I-4S-3m	S26361-F3246-E310	SAS Kabel 1x SFF 8470-4x SFF 8088 3m (3Gbit)
D:KBSAS1I-4S-5m	-	SAS Kabel 1x SFF 8470-4x SFF 8088 5m (3Gbit)
D:KBSAS1I-2S-3m	S26361-F3246-E320	SAS Kabel 1x SFF 8470-2x SFF 8088 3m(3Gbit)
D:KBSAS1I-2S-5m	-	SAS Kabel 1x SFF 8470-2x SFF 8088 5m (3Gbit)
D:KBSAS1S-2S-3m	S26361-F3246-E330	SAS Kabel 1x SFF 8088-2x SFF 8088 3m (3Gbit)
D:KBSAS1S-2S-5m	-	SAS Kabel 1x SFF 8088-2x SFF 8088 5m (3Gbit)
D:KBSAS1I-1S-2m	S26361-F3246-L203	SAS Kabel 1x SFF 8470-1x SFF 8088 2m (3Gbit)
D:KBSAS1I-1S-4m	S26361-F3246-L403	SAS Kabel 1x SFF 8470-1x SFF 8088 4m (3Gbit)
D:KBSAS1I-1S-6m	S26361-F3246-L603	SAS Kabel 1x SFF 8470-1x SFF 8088 6m (3Gbit)
D:KBSAS6G-1S-1S-2M	-	SAS Kabel 6Gb 1x SFF 8088-1x SFF 8088 2m (6Gbit)
D:KBSAS6G-1S-1S-4M	-	SAS Kabel 6Gb 1x SFF 8088-1x SFF 8088 4m (6Gbit)
D:KBSAS6G-1S-1S-6M	-	SAS Kabel 6Gb 1x SFF 8088-1x SFF 8088 6m (6Gbit)
D:KBSAS6G-1S-2S-3M	-	SAS Kabel 6Gb 1x SFF 8088-2x SFF 8088 3m (6Gbit)

Copyright Fujitsu, Release June 2015

ETERNUS LT40 S2: Top View

- Inside view with top cover removed

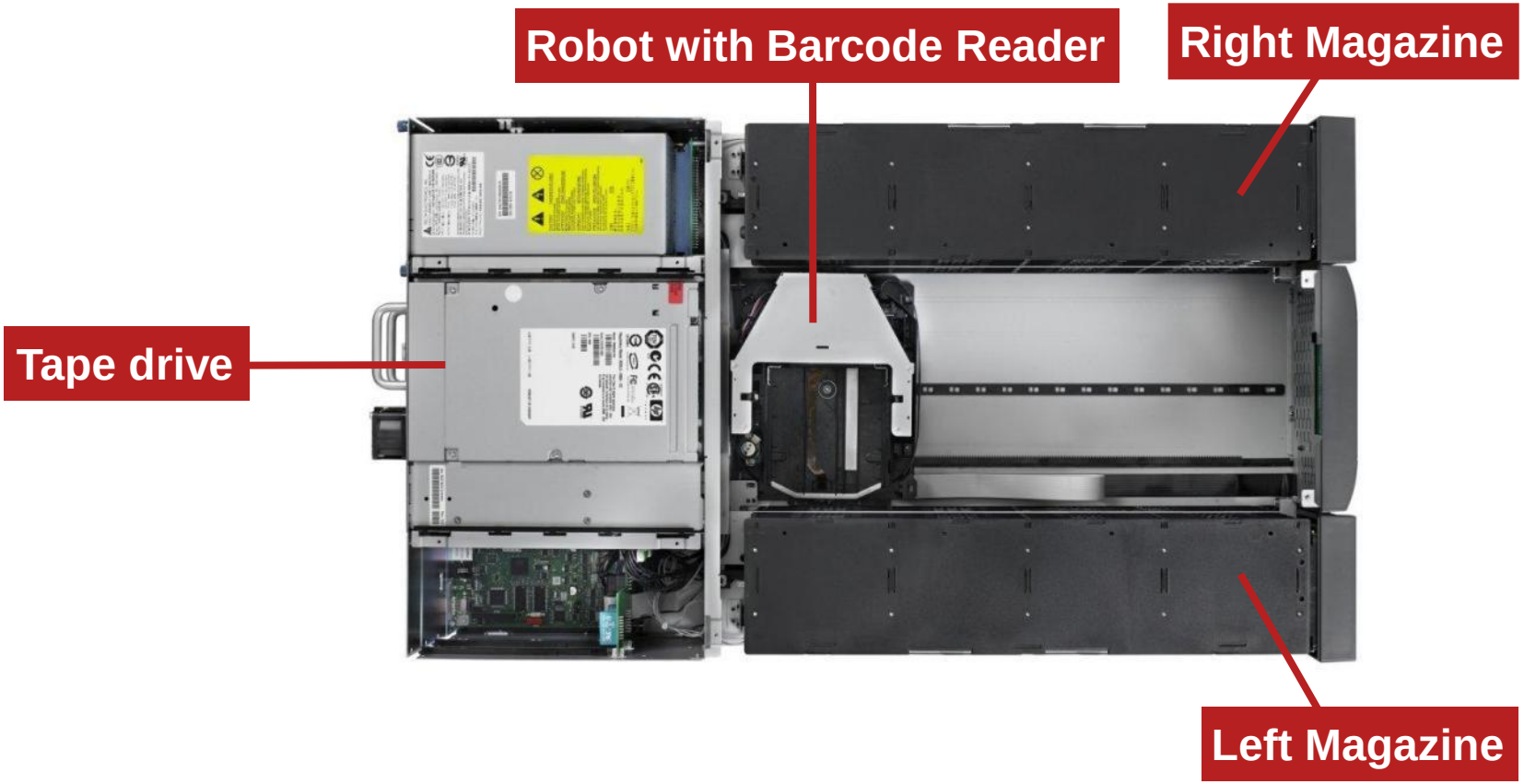

 Copyright Fujitsu, Release June 2015

ETERNUS LT60 S2: Top View

- Inside view with top cover removed

1. Left Magazines
2. Robotic
3. Controller
4. Power supply
5. Drives
6. Chassis
7. Right Magazines

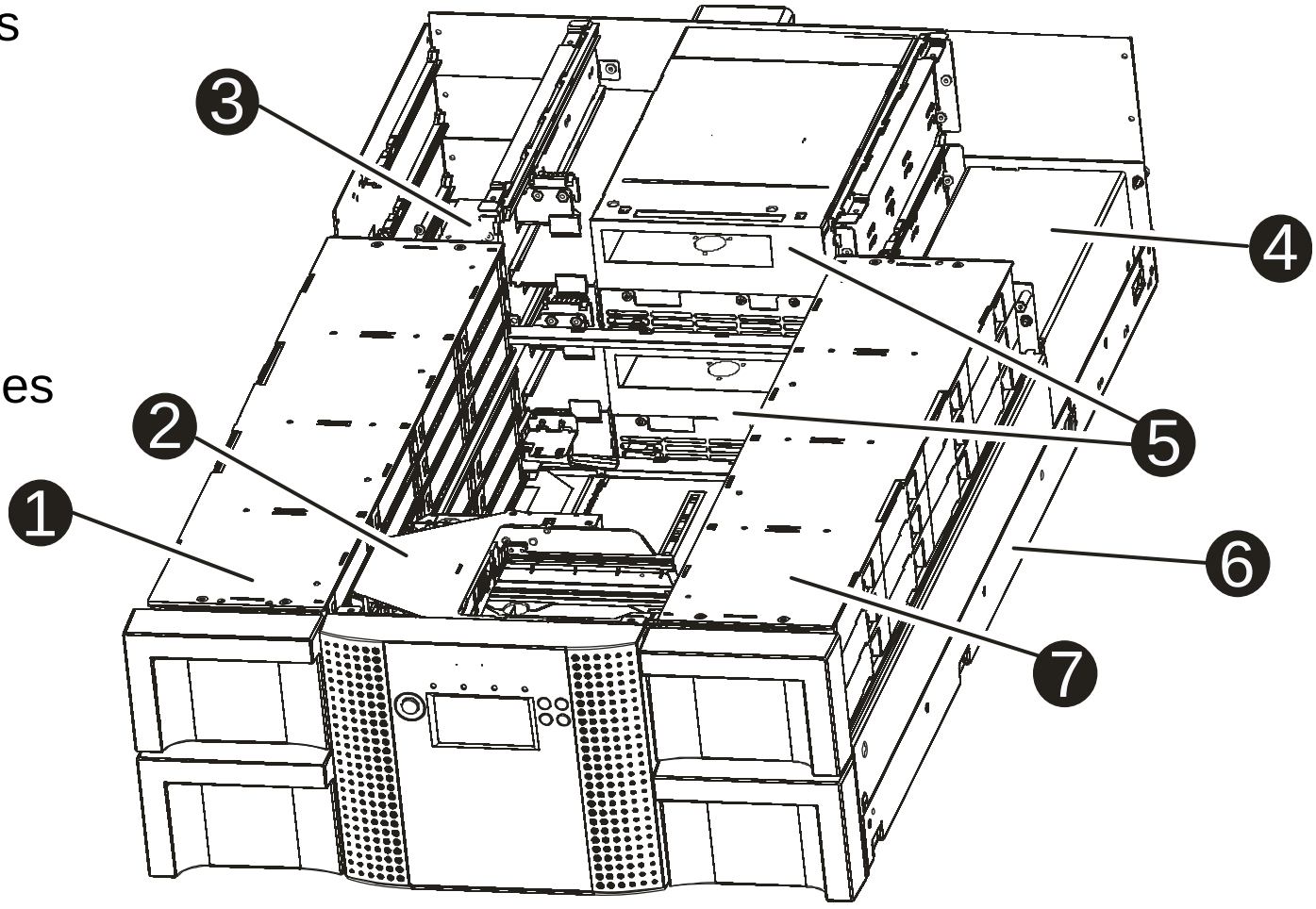

 Copyright Fujitsu, Release June 2015

ETERNUS LT20 S2: Magazines

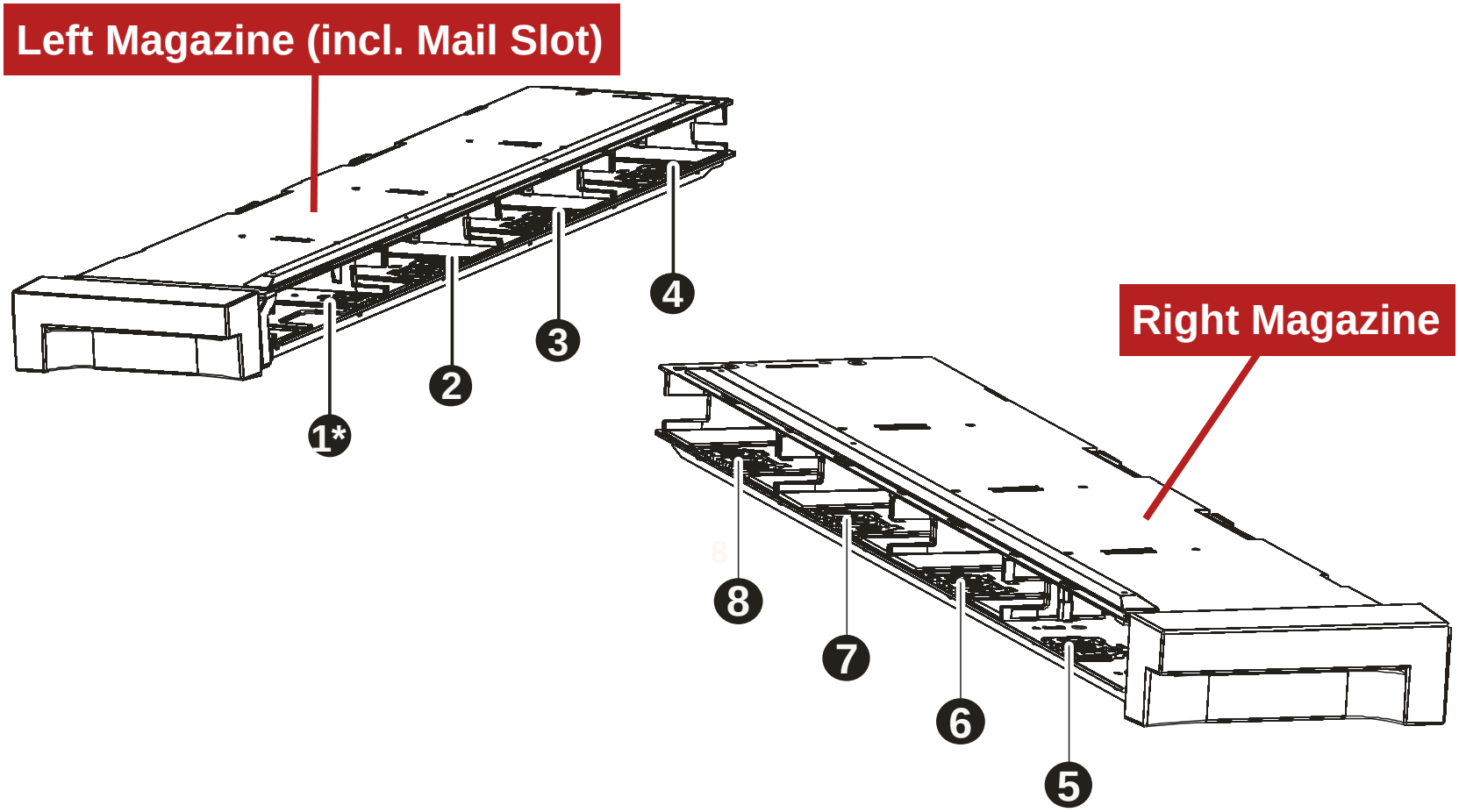

 Copyright Fujitsu, Release June 2015

ETERNUS LT40/60 S2: Magazines

Left Magazine (incl. Mail Slots)

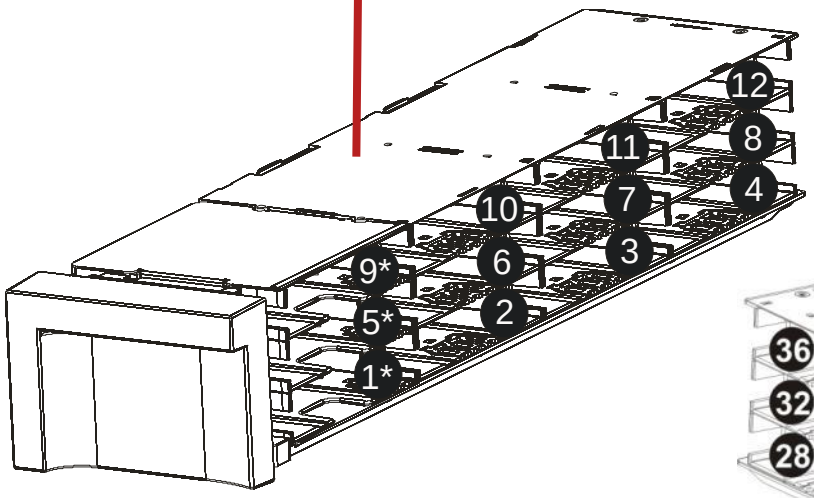

Right Magazine

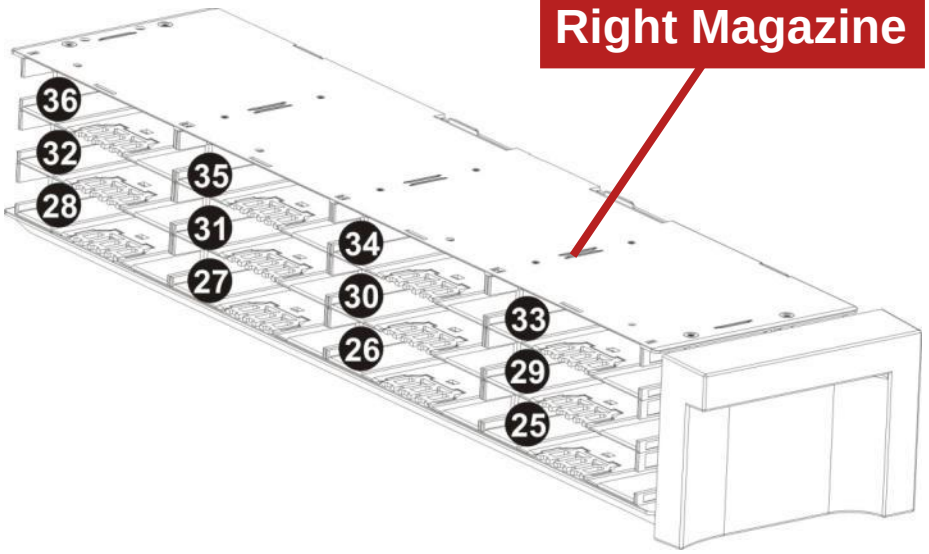

Copyright Fujitsu, Release June 2015

ETERNUS LT60 S2: Mail Slots

- Removing a cartridge from a Mail Slot

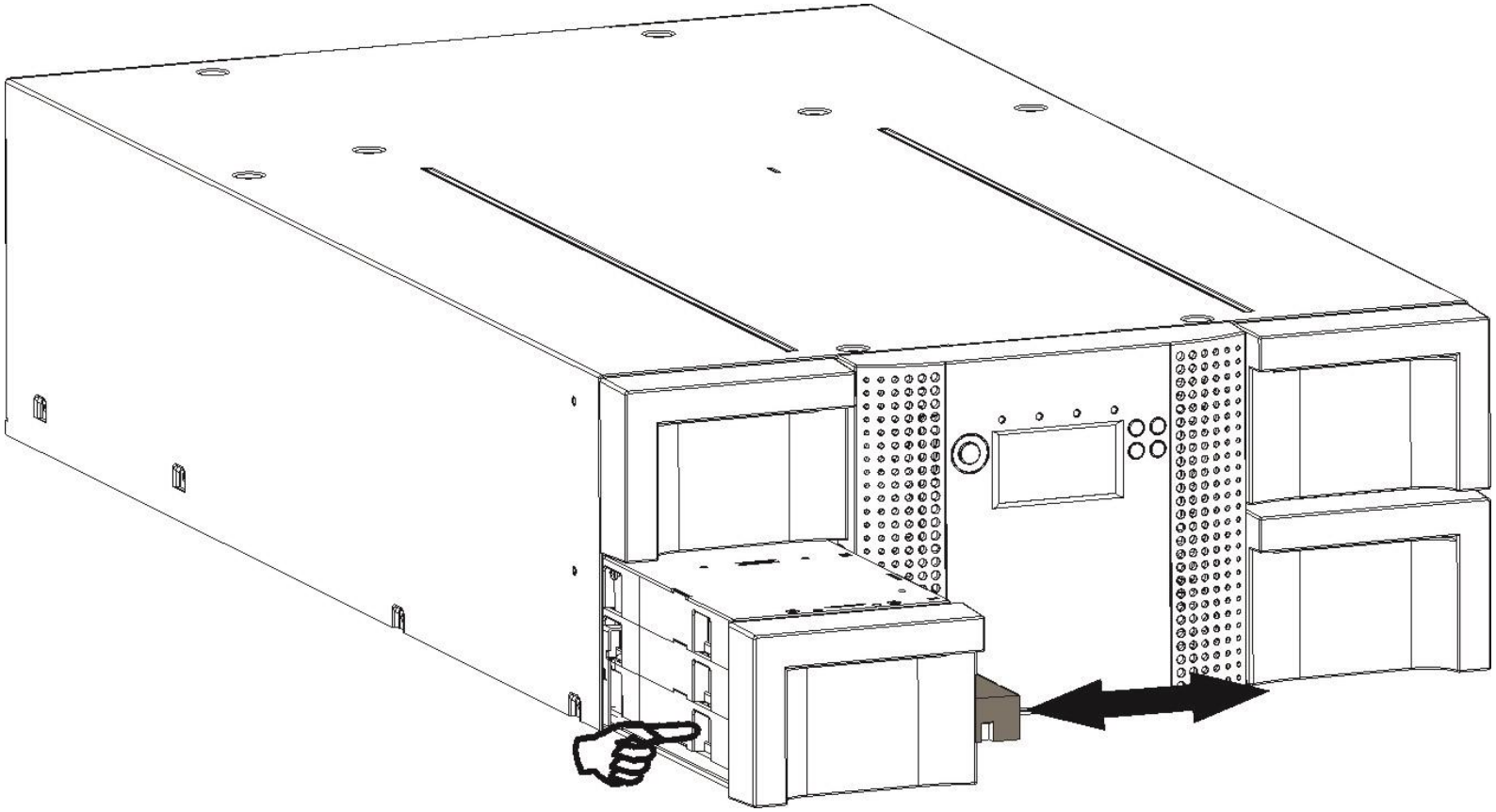

Copyright Fujitsu, Release June 2015

Cartridges

LT tape cartridge compatibility

LTO Cartridge	LTO 1 Drive	LTO 2 Drive	LTO 3 Drive	LTO 4 Drive	LTO-5 Drive	LTO-6 Drive
LTO 1 (native)	W/R 100 GB	W/R 100 GB	***Read only***	***N/A***	***N/A***	***N/A***
LTO 2 (native)	***N/A***	W/R 200 GB	W/R 200 GB	***Read only***	***N/A***	***N/A***
LTO 3 (native)	***N/A***	***N/A***	W/R 400 GB	W/R 400 GB	***Read only***	***N/A***
LTO 4 (native)	***N/A***	***N/A***	***N/A***	W/R 800 GB	W/R 800 GB	***Read only***
LTO-5 (native)	***N/A***	***N/A***	***N/A***	***N/A***	W/R 1500 GB	W/R 1500 GB
LTO-6 (native)	***N/A***	***N/A***	***N/A***	***N/A***	***N/A***	W/R 2500 GB

Barcode labels

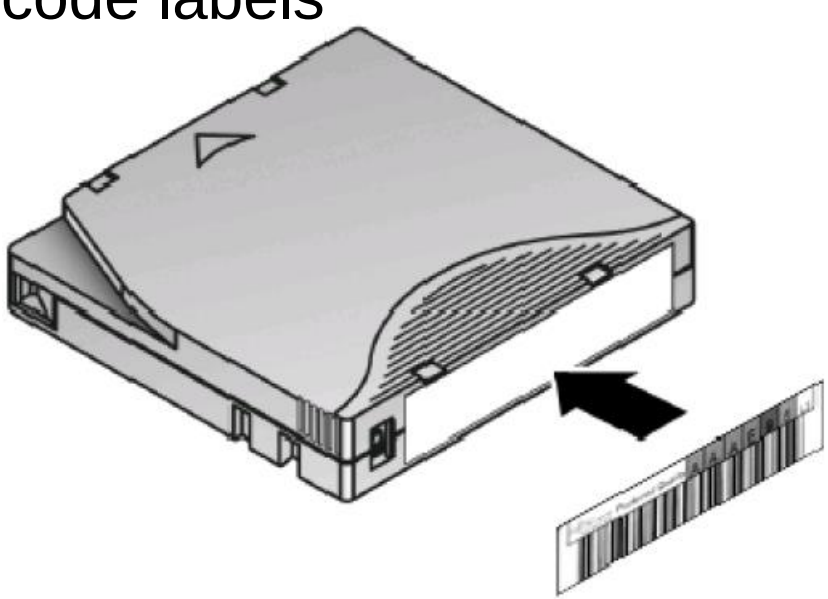

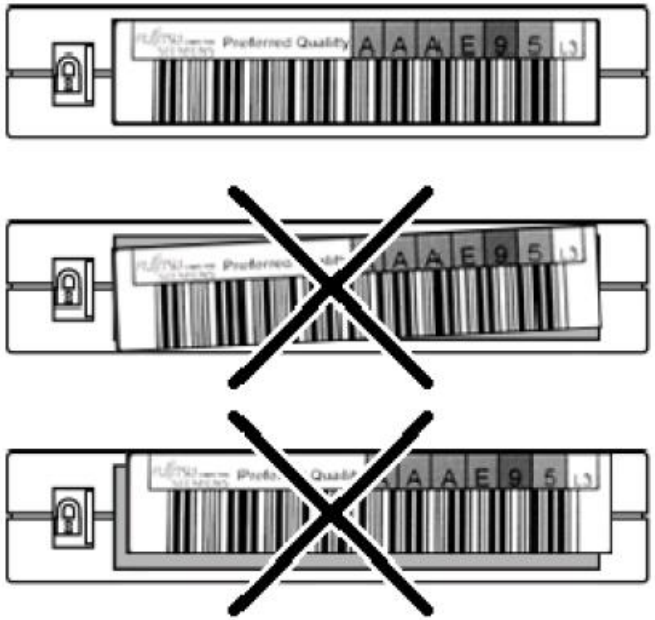

Copyright Fujitsu, Release June 2015

OCP (Operator Control Panel)

- Power button
  - Switches off Library when no activity is pending
  - 5 Seconds to abort power down sequence
  - Hold for 10 seconds to force power down
- LEDs (see next slide)
- Keys
  - Up — One level up in the menu tree
  - Down — One level down in the menu tree
  - Cancel — Leave an item without confirming
  - Enter — Confirm a selection

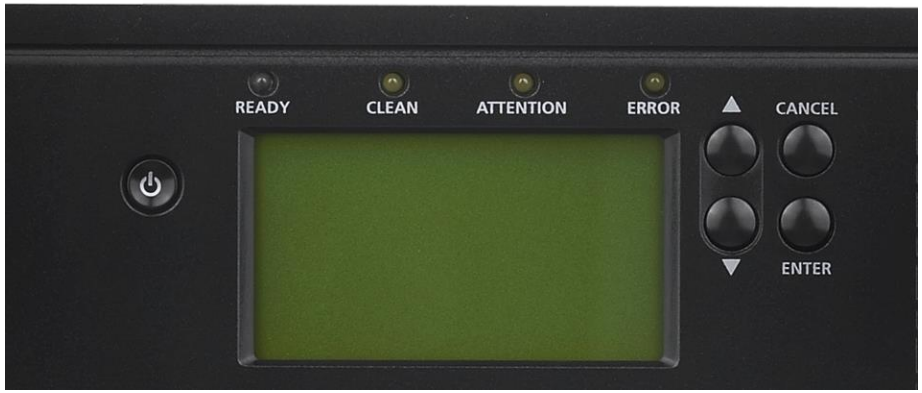

Copyright Fujitsu, Release June 2015

LEDs

- Ready
  - Constant on - Library is ready
  - Blinking - Library is busy
- Clean
  - Off - Drive needs no cleaning
  - On - Drive needs cleaning
- Attention
  - Off - No Media Event
  - On - One tape caused a media error, LED remains lit until tape has been retired from library
- Error
  - Off - Library is OK and ready
  - On - Library has an electrical or mechanical problem, consult OCP or RMU for details



Copyright Fujitsu, Release June 2015

OCP Menu

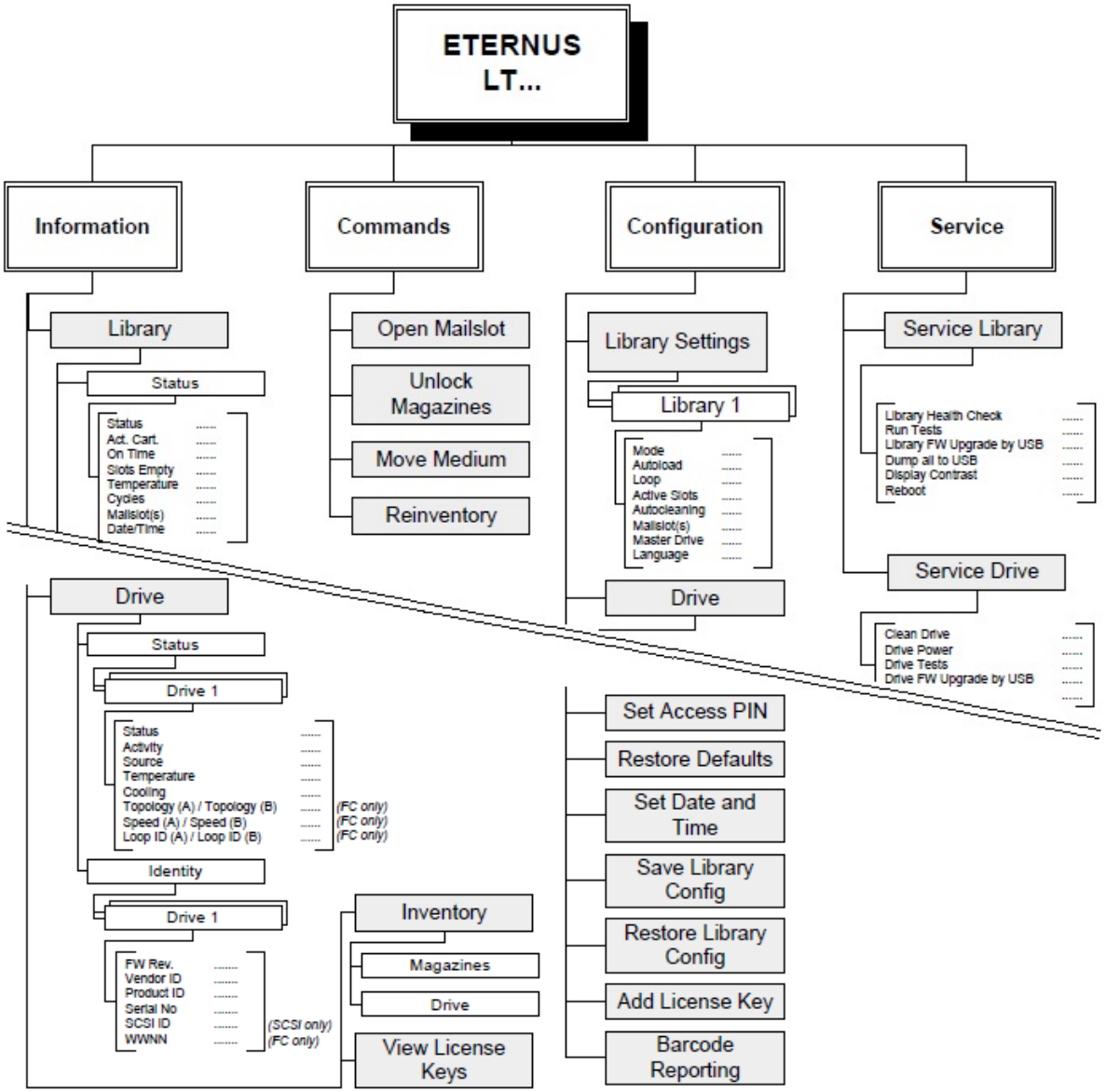

 Copyright Fujitsu, Release June 2015

RMU

- Admin and Service passwords can be requested at the 3rd Level Support



Restore Defaults

- Admin Password is kept
- Network Settings are kept
- Mail Slot disabled
- Autoclean disabled
- E-Mail Notification off but settings are kept
- SNMP off but settings are kept
- Barcode Format 8 characters left justified

Copyright Fujitsu, Release June 2015

Troubleshooting

- Sources of errors
  - Servo error
    - Forgotten to remove Shipping Key
    - Stuck Cartridge in Robot or Magazine Slot
  - Write/Read problems or connectivity
    - Tape Drive
  - Unload error
    - Stuck Cartridge in Tape Drive
  - Expired Cleaning Cartridge

Copyright Fujitsu, Release June 2015

Problem Reporting

- Please use Field Return Form for problem reporting
- The form can be downloaded from the Service Partner Portal

FIELD RETURN FORM ETERNUS LT / FibreCAT TX

CUSTOMER AND SERVICE PROVIDER DETAILS / To be filled out completely, otherwise no refund.			
Part Replaced by:	Customer ☐ Service ☐	Date Replaced: MM/DD/JJ __ __ / __ __ / __ __	
Customer / Country		Service Organisation / Engineer Name	
Problem ID/ Fujitsu 2nd Level			
FAILURE DETAILS			
Library Serial Number: LT, TX, TS, 6B, 6BR,		Library Part Number:	
Drive Serial Number: 6B., TX, TS .		Drive Part Number:	
Failure Type:	Functional Failure ☐ Replacement under Warranty ☐ Replacement for FCO ☐ DOA ☐ Solid ☐ Intermittent ☐	Product did not power on ☐ Display not functional ☐ Buttons not functional ☐ RMU not functional ☐ Bar code reader problems ☐ Noise problems ☐ Temperature Failure ☐ Cannot Load or Unload Tape ☐ Robot Error ☐ Write Failure ☐	
Library LCD Error Code:		Drive LED Error Code:	
Hours of use per week:			
Other: please describe			
Drive type:	SCSI ☐ SAS ☐ FC ☐ LTO2 ☐ LTO3 ☐ LTO4 ☐		
Check the Installation:	Is the Library installed in a rack using rails supplied by Fujitsu no ☐ yes ☐		
Media Type/Brand:			
Equipment Location:	Office ☐ Server Room ☐	Other:	
Server Model:		Server Ident No:	
Other Server Brand:			
Operating System:			
Backup Software:	Arcserve ☐ Networker ☐ Veritas ☐ NT-Backup ☐ Other ☐		
Controller Model No:			
Does this site have re-occurring backup problems:			

Customer or engineer must complete all the fields in this form and return it in the box with the faulty unit.

TROUBLE SHOOTING CHECKLIST

Fujitsu Support Web-site:	http://www.ts.fujitsu.com/support/downloads.html

1) Ensure that the unit (autoloader/drive) has the latest Fujitsu firmware revision loaded.
http://www.ts.fujitsu.com/support/downloads.html
2) Please clean the tape drive 1x and retest with a new tape.
3) Tapes are consumables and should be replaced regularly.
4) Ensure that you use Fujitsu recommended media.
5) Ensure that the operating environment suitable:
   a) Temperature, humidity and dust must all be controlled.
   b) The tape unit should be placed no lower than waist high to reduce dust contamination.
6) Ensure that the SCSI bus is configured properly?
   a) LVD-SCSI controller must be used.
   b) LVD terminator is fitted.
   c) Check cable and terminator for damaged pins.
   d) Ensure that the backup unit is not connected to the same SCSI bus as a HDD/Raid-system
   e) Ensure that the correct drivers are installed for the SCSI/FC adapter.
7) Ensure that the backup software is properly configured:
   a) Stop and disable the removable storage manager if you are using 3rd party backup software e.g. Backup Exec, etc.
   b) You must use device drivers provided by the 3rd party backup software, please ensure these are loaded.

Field Failure Return Form / Released: 1st April 2009

Copyright Fujitsu, Release June 2015

ETERNUS LT20 S2: FRUs

- Only two FRUs (Field Replaceable Units)
  - Whole unit without tape drive



  - Half Height LTO-3 1), LTO-4, LTO-5 or LTO-6 tape drive



1) Available as a spare part.

Copyright Fujitsu, Release June 2015

ETERNUS LT40/60 S2: FRUs

- FRUs
  - Whole unit without tape drive



  - LTO-3 [1], LTO-4, LTO-5 or LTO-6 tape drive
    - Half Height: LTO-3 [1], LTO-4, LTO-5 and LTO-6
    - Full Height: LTO-4 [1] and LTO-5



  - Controller



  - Power supply



1) Available as a spare part.

Copyright Fujitsu, Release June 2015

Tape Drive Replacement

- If replacing the lower tape drive as shown, first pull back the product ID tag
- Push down carefully the serial number tag
- Pull the drive out

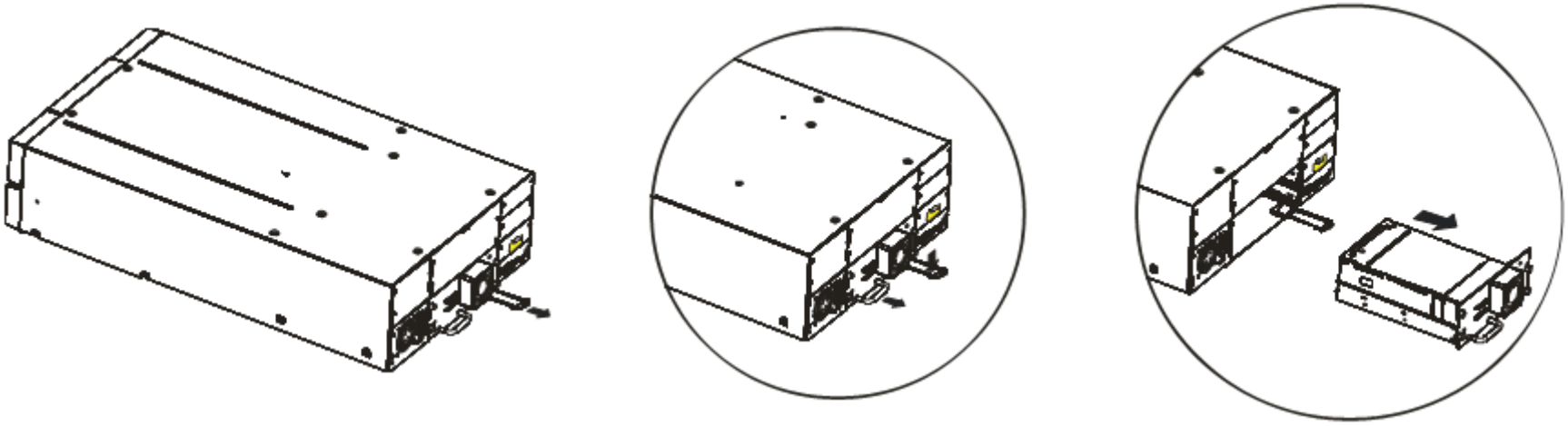

Always refer to the respective Handbook for detailed instructions.

Copyright Fujitsu, Release June 2015

ETERNUS LT40/60 S2: Power Supply Replacement

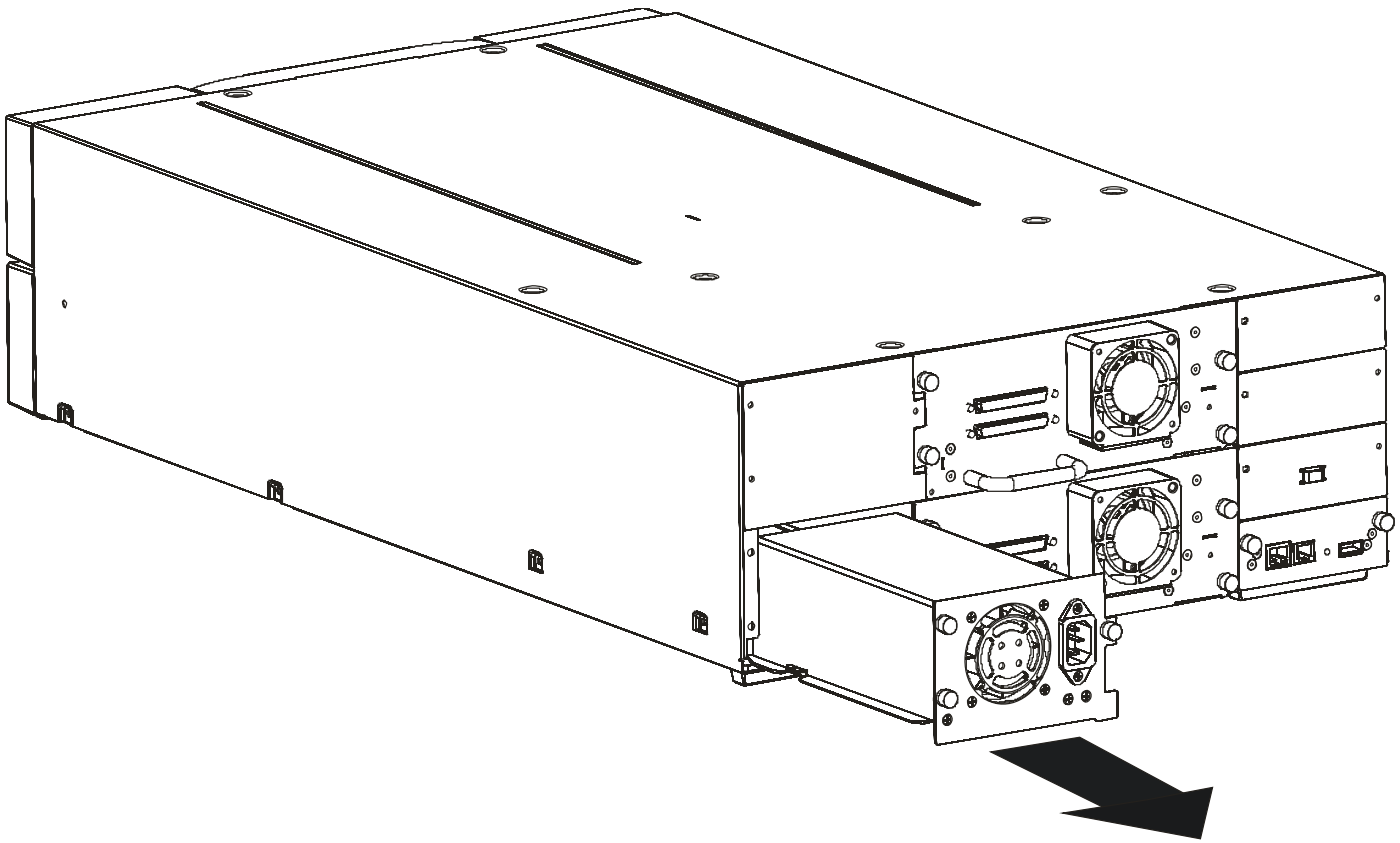

Always refer to the respective Handbook for detailed instructions.

Copyright Fujitsu, Release June 2015

ETERNUS LT40/60 S2: Controller Replacement

- The configuration (MAC address, IP address, etc.) is stored in the library controller and the robotic controller
- When replacing the library controller
  - Replacement controller must have a serial number starting with "FRUxxx"
- Do not copy any configurations!

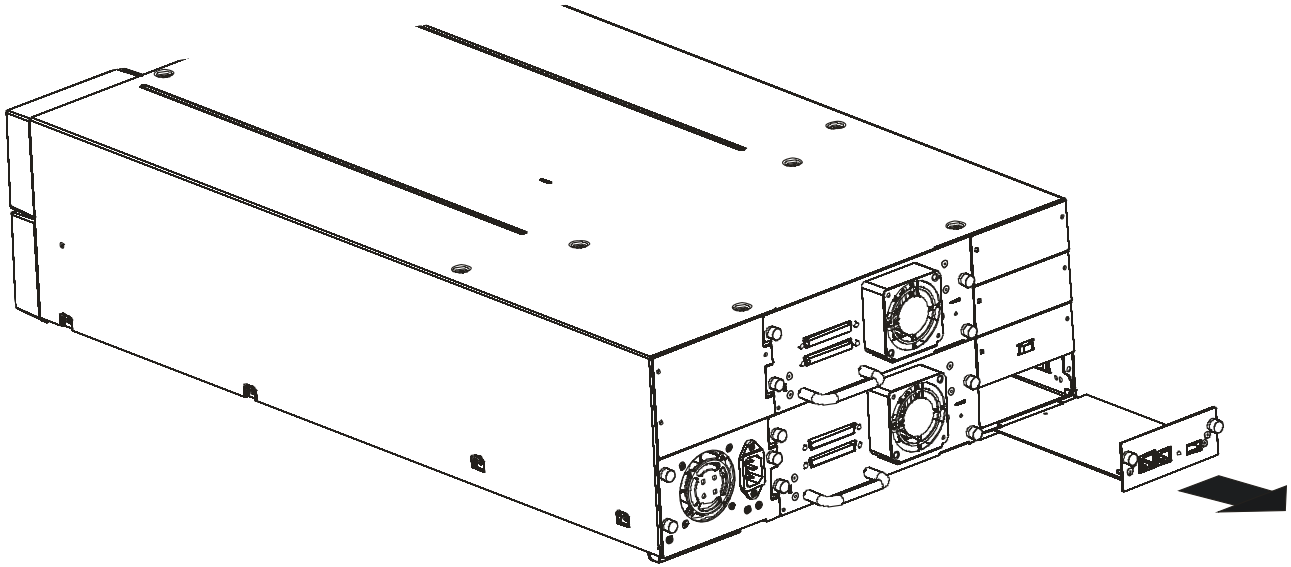

Always refer to the respective Handbook for detailed instructions.

Copyright Fujitsu, Release June 2015

Manual Tape Removal

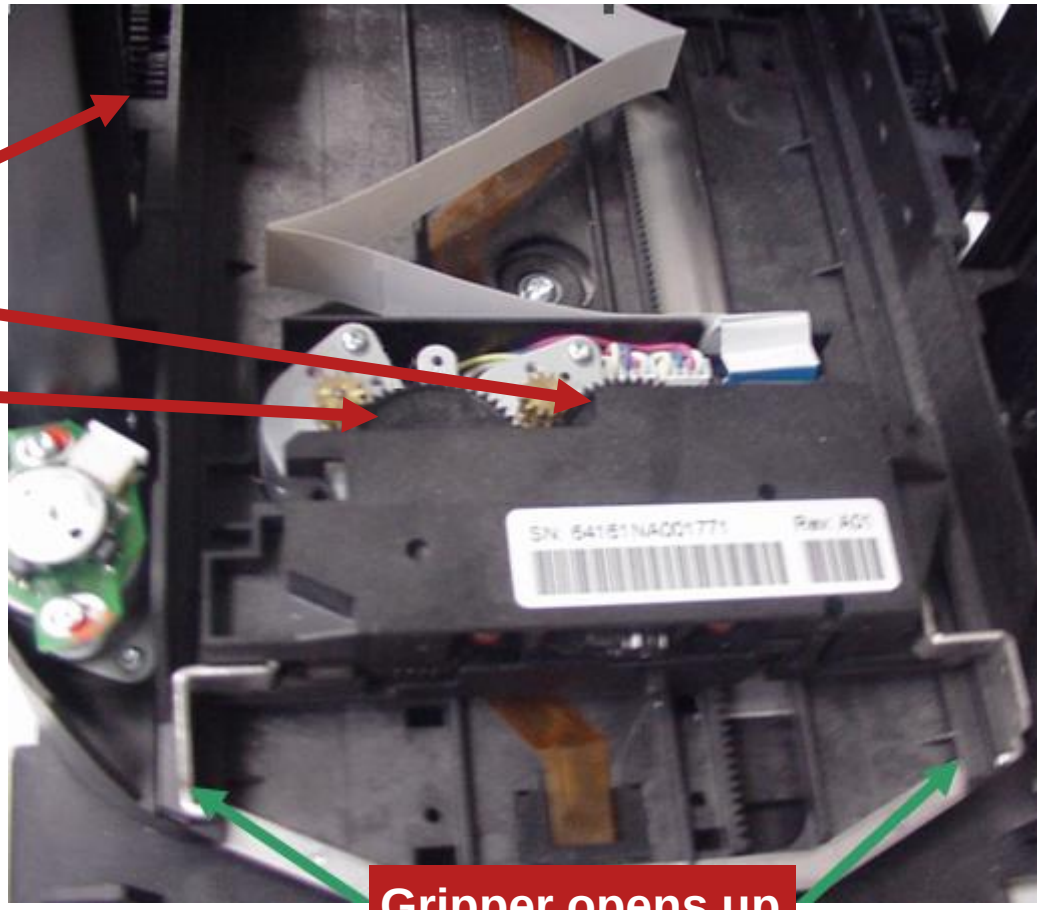

 Copyright Fujitsu, Release June 2015

Known Issues and Limitations

- Do not use the library on a desk surface, it is designed to be used primarily in a rack
- Problems may appear with WebTools during start-up when using older versions of Internet browser (Netscape)

Copyright Fujitsu, Release June 2015

Additional Information

- Manuals
  - https://partners.ts.fujitsu.com/sites/primeweb/services/storage/eternus/document/Pages/dc-guide-hard-tape.aspx
  - ETERNUS LT20 S2 LTO Library Installing, Starting Up and Maintaining
  - ETERNUS LT40 S2 / LT60 S2 LTO Library Installing, Starting Up and Maintaining
  - ETERNUS LT20 S2 / LT40 S2 / LT60 S2 Tape Library User's Guide - Monitoring Software Setup Procedure - #1
- Download sources
  - http://www.ts.fujitsu.com/support/downloads.html

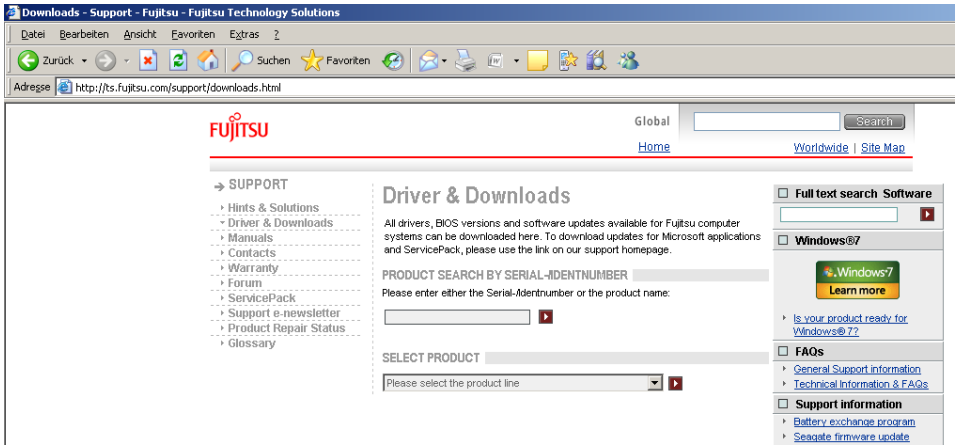

 Copyright Fujitsu, Release June 2015

Tools

- Tools for testing:
  - http://www.ts.fujitsu.com/support/downloads.html

Filename	Description	ETERNUS LT20 *	ETERNUS LT40 *	ETERNUS LT60 *	HP LTO Drive
FLATt.exe	FLATt Tool Windows	X	X	X	X
FLATt	FLATt Tool Linux	X	X	X	X
FLATt	FLATt Tool Solaries	X	X	X	X
HP_LTT.exe	HP LTO Test Tool Windows				X/O
hp_ltt	HP LTO Test Tool Linux				X
hp_ltt	HP LTO Test Tool Solaries				X
FSC Apptest	Windows	T	T	T	T

* ETERNUS LTxx = FibreCAT TX08 / TX24 S2 / TX48 S2

X Functions tests / FW update / read Service Dumps
O Analyse LTO HP Service Ticket and FLATt LTO Drive Dump
T Use FUJITSU internally only

Copyright Fujitsu, Release June 2015

Tips and Hints (1)

- Before logging a problem report please look into the log files to find out irregularities or abnormal behavior

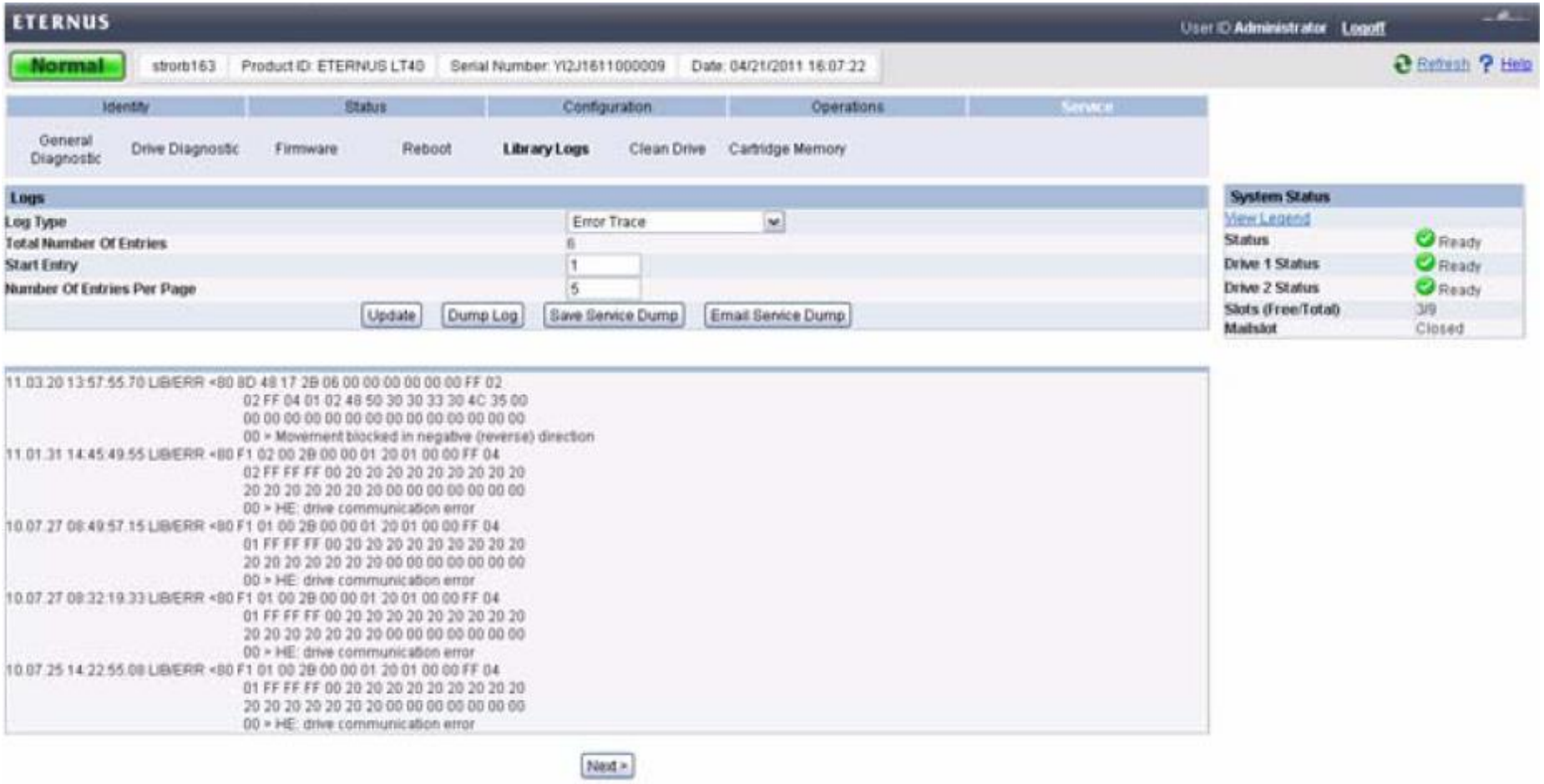

 Copyright Fujitsu, Release June 2015

Tips and Hints (2)

- Changing (replacing) the library
  - Note the IP address and the complete configuration of the library to be replaced
  - Install the drives and the magazines (with cartridges) from the system to be replaced into the replacement system
  - Remove and stow the shipping key of the replacement system and install the shipping key in the system to be replaced
  - Test the system using the internal tests
  - Install SAS and LAN cables and boot the system
- Upgrading a library with an LTO-6 tape drive
  - Firmware version 4.80 or higher is required
    - Please note that using version 4.70 may result in sporadic move errors, with earlier versions the LTO-6 drive is not recognized

Always refer to the respective Handbook for detailed instructions.

Copyright Fujitsu, Release June 2015

Tips and Hints (3)

- Changing the system ID string
  - ETERNUS LT S2 systems have a new ID string "ETERNUS LT S2"
    - The new string will also be set by default if an older LT or TX library is updated with firmware version 4.59 of higher
  - If the backup software does not recognize the new string it is possible to set it back using the RMU
    - Dropdown menu in [Configuration] - [System]

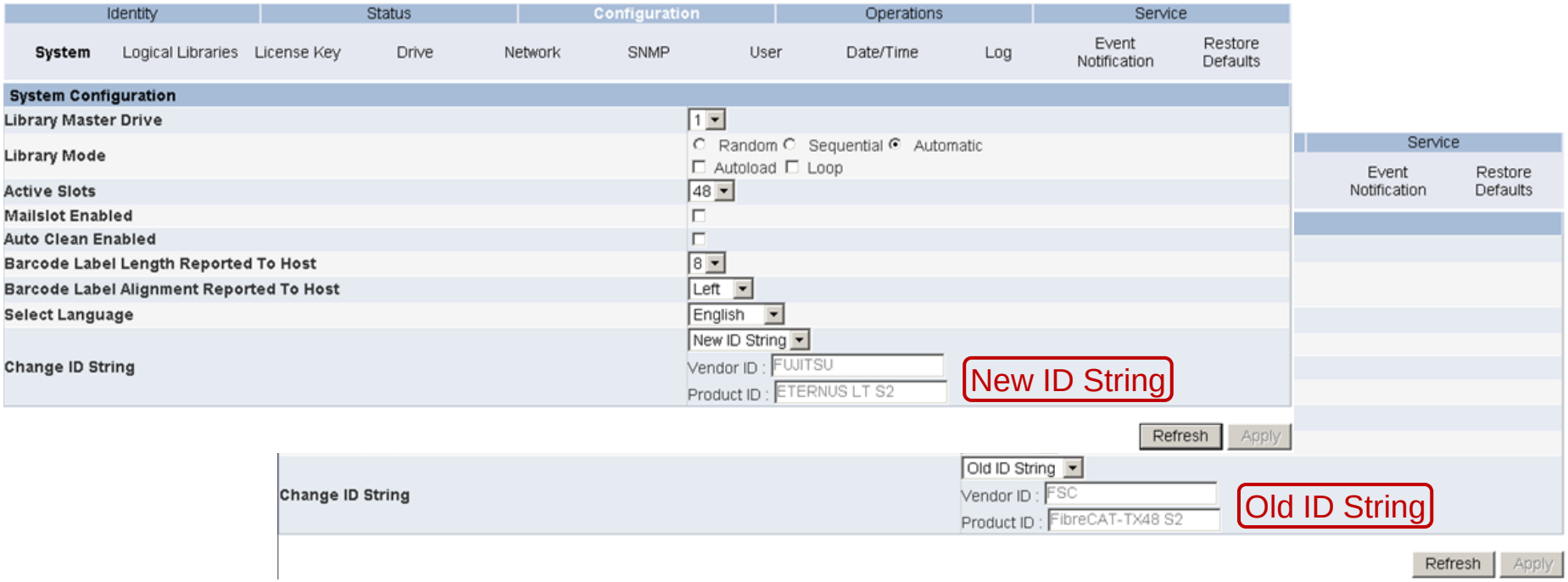

 Copyright Fujitsu, Release June 2015

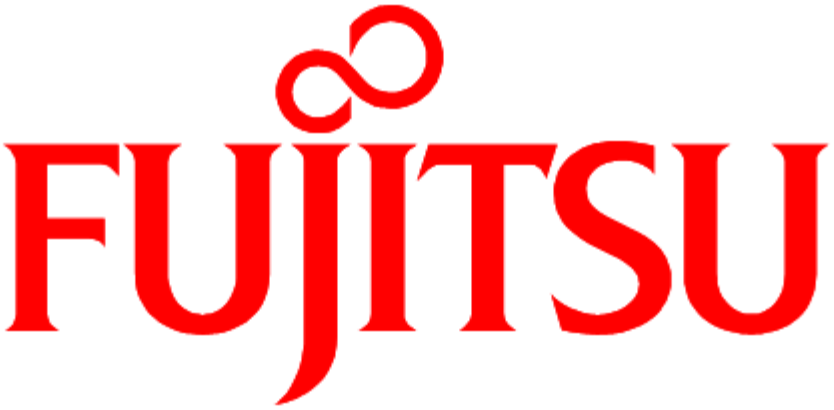
FUJITSU