HITACHI
Inspire the Next

Hitachi Virtual Storage Platform
Installation Planning Guide

FASTFIND LINKS

Document Organization
Product Version
Getting Help
Contents

Hitachi Data Systems

MK-90RD7041-09

©2010-2013 Hitachi Ltd, All rights reserved.

No part of this publication may be reproduced or transmitted in any form or by any means, electronic or mechanical, including photocopying and recording, or stored in a database or retrieval system for any purpose without the express written permission of Hitachi, Ltd. (hereinafter referred to as "Hitachi"), and Hitachi Data Systems Corporation (hereinafter referred to as "Hitachi Data Systems").

Hitachi and Hitachi Data Systems reserve the right to make changes to this document at any time without notice and assume no responsibility for its use. This document contains the most current information available at the time of publication. When new or revised information becomes available, this entire document will be updated and distributed to all registered users.

All of the features described in this document may not be currently available. Refer to the most recent product announcement or contact your local Hitachi Data Systems sales office for information about feature and product availability.

Notice: Hitachi Data Systems products and services can be ordered only under the terms and conditions of Hitachi Data Systems' applicable agreements. The use of Hitachi Data Systems products is governed by the terms of your agreements with Hitachi Data Systems.

Hitachi is a registered trademark of Hitachi, Ltd., in the United States and other countries. Hitachi Data Systems is a registered trademark and service mark of Hitachi in the United States and other countries.

ShadowImage and TrueCopy are registered trademarks of Hitachi Data Systems.

AIX, FICON, FlashCopy, IBM, MVS/ESA, MVS/XA, OS/390, S/390, VM/ESA, VSE/ESA, z/OS, zSeries, z/VM, and zVSE are registered trademarks or trademarks of International Business Machines Corporation.

All other trademarks, service marks, and company names are properties of their respective owners.

Microsoft product screen shots reprinted with permission from Microsoft Corporation.

Contents

Preface v

Safety and environmental information vi
Intended Audience vi
Product Version vi
Document Revision Level vi
Changes in this Revision vi
Referenced Documents vi
Document Organization vii
Document Conventions vii
Convention for storage capacity values viii
Accessing product documentation ix
Getting help ix
Comments ix

1 Planning an installation 1-1

Responsibilities 1-2
User responsibilities 1-2
Hitachi Data Systems responsibilities 1-2
Installation planning checklist 1-2

2 Safety requirements 2-1

General safety guidelines 2-2
Work safety guidelines 2-2
Warning about moving parts 2-3
Electrical safety guidelines 2-3

3 Installation requirements 3-1

Safety requirements 3-2
General site requirements 3-2
Equipment clearances 3-2

Equipment weight 3-2
Storage Requirements 3-3
Data center requirements. 3-3
System specifications and requirements 3-4
Mechanical specifications 3-4
Electrical specifications 3-5
Grounding 3-6
Power connection 3-6
Power connection diagrams 3-7
Flash chassis cabling. 3-10
Environmental specifications. 3-13
Service clearance, floor cutout, and floor load rating. 3-14
Single rack configuration 3-14
Two-rack configuration (one controller) 3-16
Two-rack configuration (two controllers) 3-18
Three-rack configuration (left module) 3-20
Three-rack configuration (right module) 3-22
Four-rack configuration (left module) 3-24
Four-Rack configuration (right module) 3-26
Five-rack configuration. 3-28
Six-rack configuration 3-30
Operational requirements. 3-32

Glossary

Index

Preface

This manual provides specifications and requirements needed to plan the installation and prepare the site where the Hitachi Virtual Storage Platform storage system will be installed.

Read this document carefully to understand how to use this product, and maintain a copy for reference.

This preface includes the following information:

- ☐ Safety and environmental information
- ☐ Intended Audience
- ☐ Product Version
- ☐ Document Revision Level
- ☐ Changes in this Revision
- ☐ Referenced Documents
- ☐ Document Organization
- ☐ Document Conventions
- ☐ Convention for storage capacity values
- ☐ Accessing product documentation
- ☐ Getting help
- ☐ Comments

Safety and environmental information

Caution: Before operating or working on the Virtual Storage Platform storage system, read the safety and environmental information in Safety requirements on page 2-1.

Intended Audience

This document is intended for system administrators, Hitachi Data Systems representatives, and authorized service providers who are involved in installing, configuring, and operating the Hitachi Virtual Storage Platform storage system.

Readers of this document should have at least the following knowledge and experience:

- You should have a background in data processing and understand RAID storage systems and their basic functions.
- You should be familiar with the Hitachi Virtual Storage Platform storage system, and have read the *Hitachi Virtual Storage Platform User and Reference Guide*.

Product Version

This document revision applies to Hitachi Virtual Storage Platform firmware version 70-06-0*x* and higher.

Document Revision Level

Revision	Date	Description
MK-90RD7041-00	August 2010	Initial release
MK-90RD7041-01	November 2010	Supersedes and replaces MK-90RD7041-00
MK-90RD7041-02	May 2011	Supersedes and replaces MK-90RD7041-01
MK-90RD7041-03	August 2011	Supersedes and replaces MK-90RD7041-02
MK-90RD7041-04	November 2011	Supersedes and replaces MK-90RD7041-03
MK-90RD7041-05	March 2012	Supersedes and replaces MK-90RD7041-04
MK-90RD7041-06	June 2012	Supersedes and replaces MK-90RD7041-05
MK-90RD7041-07	November 2012	Supersedes and replaces MK-90RD7041-06
MK-90RD7041-08	November 2012	Supersedes and replaces MK-90RD7041-07
MK-90RD7041-09	July 2013	Supersedes and replaces MK-90RD7041-08

Changes in this Revision

- Updated the Environmental Specifications.

Referenced Documents

Hitachi Virtual Storage Platform documentation:

Referenced Documents

Hitachi Virtual Storage Platform documentation:

- *Hitachi Virtual Storage Platform User and Reference Guide* MK-90RD7042
- *Hitachi Virtual Storage Platform Documentation Roadmap* MK-90RD7039

Document Organization

The following table provides an overview of the contents and organization of this document. Click the chapter title in the left column to go to that chapter. The first page of each chapter provides links to the sections in that chapter.

Chapter/Appendix	Description
Chapter 1, Planning an installation	This chapter provides an overview of the Virtual Storage Platform hardware and software.
Chapter 2, Safety requirements	This chapter provides a description of the safety requirements necessary to follow for installation.
Chapter 3, Installation requirements	This chapter provides site and system requirements and specifications that ere needed to plan a Hitachi Virtual Storage Platform storage system installation and prepare the site where the system will be installed, so that the equipment installation is efficient and trouble-free.
Glossary	Defines the special terms used in this document.
Index	Lists topics in this document in alphabetical order.

Document Conventions

This document uses the following typographic conventions:

Convention	Description
Bold	Indicates text on a window, other than the window title, including menus, menu options, buttons, fields, and labels. Example: Click **OK**.
Italic	Indicates a variable, which is a placeholder for actual text provided by the user or system. Example: copy *source-file target-file* ***Note:*** Angled brackets (< >) are also used to indicate variables.
`screen/code`	Indicates text that is displayed on screen or entered by the user. Example: `# pairdisplay -g oradb`
< > angled brackets	Indicates a variable, which is a placeholder for actual text provided by the user or system. Example: `# pairdisplay -g <group>` ***Note:*** Italic font is also used to indicate variables.
[ ] square brackets	Indicates optional values. Example: [a | b] indicates that you can choose a, b, or nothing.

Convention	Description
| vertical bar	Indicates that you have a choice between two or more options or arguments. Examples: [a | b] indicates that you can choose a, b, or nothing. { a | b } indicates that you must choose either a or b.

This document uses the following icons to draw attention to information:

Icon	Meaning	Description
	Tip	Tips provide helpful information, guidelines, or suggestions for performing tasks more effectively.
	Note	Notes emphasize or supplement important points of the main text.
	Caution	Cautions indicate that failure to take a specified action could result in damage to the software or hardware.
	WARNING	Warnings indicate that failure to take a specified action could result in loss of data or serious damage to hardware.
	ELECTRIC SHOCK HAZARD	Failure to take appropriate precautions such as not opening or touching hazardous areas of the equipment could result in injury or death.

Convention for storage capacity values

Physical and logical storage capacities of disk drives in Hitachi Data Systems' storage products are calculated based on the following values:

Logical Units : Block Size - 512 Bytes (Logical Disk Capacity)	
1 KB (kilobyte) = 1,024 bytes (2^{10})	1 TB (terabyte) = $1{,}024^4$ bytes
1 MB (megabyte) = $1{,}024^2$ bytes	1 PB (petabyte) = $1{,}024^5$ bytes
1 GB (gigabyte) = $1{,}024^3$ bytes	1 EB (exabyte) = $1{,}024^6$ bytes

Logical storage capacity values (logical device capacity) are calculated based on the following values:

Hard Disk Drives (HDDs) (Physical Disk Capacity)	
1 KB = 1,000 bytes	1 TB = $1{,}000^4$ bytes
1 MB = $1{,}000^2$ bytes	1 PB = $1{,}000^5$ bytes
1 GB = $1{,}000^3$ bytes	1 EB = $1{,}000^6$ bytes

Accessing product documentation

The VSP user documentation is available on the Hitachi Data Systems Support Portal: https://Portal.HDS.com. Check this site for the most current documentation, including important updates that may have been made after the release of the product.

Getting help

The Hitachi Data Systems customer support staff is available 24 hours a day, seven days a week. If you need technical support, log on to the Hitachi Data Systems support portal for contact information: https://Portal.HDS.com

Comments

Please send us your comments on this document: doc.comments@hds.com. Include the document title, number, and revision. Please refer to specific sections and paragraphs whenever possible.

Thank you! (All comments become the property of Hitachi Data Systems.)

1

Planning an installation

This chapter describes the requirements and procedures to create a plan to install a Hitachi Virtual Storage Platform storage system.

- ☐ Responsibilities
- ☐ Installation planning checklist

Responsibilities

The responsibilities for installation planning are shared by the system users and Hitachi Data Systems support. The required installation planning tasks must be scheduled and completed to ensure successful and efficient installation of the Hitachi Virtual Storage Platform storage system.



Note: The VSP storage system must be installed by trained Hitachi Data Systems personnel or trained authorized service providers. The VSP storage system is not a customer-installable product.

User responsibilities

You are responsible for performing the following tasks to prepare for installation of the VSP storage system.

- Understand the applicable safety requirements associated with installing a VSP storage system.
- Understand the installation requirements for the VSP storage system. You can use the information in this manual to determine the specific requirements for your installation. As needed, review the *Hitachi Virtual Storage Platform User and Reference Guide* to familiarize yourself with the components, features, and functions of the VSP storage system.
- Verify that the installation site meets all installation requirements. A checklist is included in this section to help you with this task.
- Provide electrical hardware, including cables, connectors and receptacles that are required to connect the VSP storage system to site power.
- As needed, work with Hitachi Data Systems support to create an installation plan. Allow enough time to complete any changes to the plan, so your site is ready when the equipment arrives.

Hitachi Data Systems responsibilities

Hitachi Data Systems support is responsible for completing the following tasks:

- Assist you as needed during the installation planning process for your specific site and operational configuration
- Coordinate Hitachi Data Systems resources to ensure a successful installation and configuration of the Virtual Storage Platform storage system.

Installation planning checklist

The following checklist can help you ensure that your site meets all requirements to install a Virtual Storage Platform storage system. You can make copies of this checklist for each installation you perform and check each step after it has been performed. Completing this checklist can help ensure smooth and efficient installation of a VSP storage system.

Definition of terms

Equipment: The hardware delivered to the customer site that includes the VSP storage system components and racks.

Location: The specific location in the data center (area or "footprint" on the floor) where the VSP storage system will be installed.

User Information	
Company	.
Address	.
Contact	.
Phone	.
Mobile	.
Email	.
Contact	.
Phone	.
Mobile	.
Email	.
Hitachi Data Systems Information	
Contact	.
Phone	.
Mobile	.
Email	.
Contact	.
Phone	.
Mobile	.
Email	.
Notes	.
.	.

Installation Planning Checklist	Yes	No
Safety Requirements See Data center requirements on page 3-3.	.	.
Does the data center provide appropriate fire protection for computer equipment such as VSP storage systems?	.	.
Is the data center free of hazards such as cables that obstruct access?	.	.
Delivery Requirements See Table 3-1 VSP shipping crate dimensions on page 3-2, Table 3-2 VSP single rack dimensions on page 3-2, and Table 3-3 Weight of typical VSP system configurations on page 3-3.	.	.
Is the receiving area adequate for equipment delivery, unloading and unpacking? .	.	.

Installation Planning Checklist		Yes	No
Are all doors, hallways, elevators, and ramps wide enough and high enough to allow the equipment to be moved from the receiving area to the installation area?		.	.
Can the floors, elevators, and ramps support the weight of the equipment? See .		.	.
Storage Requirements See Environmental specifications on page 3-13.		.	.
If the equipment will be stored after delivery and prior to installation, does the storage location meet the environmental requirements for storing a VSP storage system?		.	.
Facilities Requirements See Data center requirements on page 3-3 and Service clearance, floor cutout, and floor load rating on page 3-14.		.	.
Does the data center have a raised floor?		.	.
Does the location meet the requirements for service clearance and cable routing (for example, floor cutouts)? See		.	.
Does the installation site meet the floor load rating requirements?		.	.
Power Requirements See Electrical specifications on page 3-5 and Power connection on page 3-6.		.	.
Does the data center meet the AC input power requirements? .		.	.
Does the data center meet the circuit breaker and plug requirements? See .		.	.
Is the customer-supplied hardware such as connectors, receptacles, and cables ready for the installation?		.	.
Environmental Requirements See Data center requirements on page 3-3 and Environmental specifications on page 3-13.		.	.
Does the data center meet the following operational environmental requirements for a VSP storage system? .		.	.
	temperature	.	.
	humidity	.	.
	altitude	.	.
	air flow	.	.
Does the data center provide adequate protection for a VSP storage system from the following?		.	.
.	electrostatic discharge	.	.
.	electrical/radio frequency interference	.	.
.	dust, pollution, and particulate contamination	.	.
Does the data center provide adequate acoustic insulation to operate the Virtual Storage Platform storage system?		.	.
Operational Requirements See Data center requirements on page 3-3.		.	.

Installation Planning Checklist	Yes	No
Does the data center provide a LAN for Storage Navigator?	.	.
Does the location meet the cable length requirements for the front-end directors?	.	.
Does the location meet the requirements for attaching external storage?	.	.

2

Safety requirements

Install Hitachi equipment in accordance with the local safety codes and regulations that apply to the facility. This chapter contains additional safety information that may apply to your facility. Read and follow the safety guidelines in this chapter before installing the equipment. The key sections in this chapter are:

- ☐ General safety guidelines
- ☐ Work safety guidelines

General safety guidelines

Observe the following general site guidelines:

- **General Requirements:** The data center must comply with all applicable safety regulations, standards, and requirements for installing and operating industrial computer equipment similar to a Virtual Storage Platform storage system.
- **Fire protection:** The data center must have an operational fire protection system appropriate for use with computer and electrical equipment.
- **Hazards:** The data center must be free of hazards (for example, cables on the floor that block access or that can cause people to trip).
- **Equipment modifications:** Do not make mechanical or electrical modifications to the equipment. Hitachi Data Systems is not responsible for regulatory compliance of a modified Hitachi Data Systems product.
- **Earthquake Safety:** To minimize personal injury in the event of an earthquake, securely fasten the control and drive chassis to a rigid structure extending from the floor to the ceiling or from the walls of the room in which the system is located.
- **Cabling:** Do not block walkways when routing cables. Do not place heavy materials on cables. Do not place cables near any possible source of heat.
- **Warning and safety labels:** Safety warnings, cautions, and instructions in various languages are attached to the VSP storage system components. The safety warnings provide guidelines to follow when working with any equipment. Before working on the storage system, read all safety and warning labels attached to it. If the labels become dirty, damaged, unreadable, or peel off, contact the Hitachi Data Systems support center.
- **Authorized personnel:** Allow only qualified and authorized personnel (for example, a licensed electrician) to perform hazardous tasks.

Work safety guidelines

Observe the following site guidelines:

- Do not wear loose clothing that could get caught in the equipment or mounting hardware. Fasten your tie or scarf and roll up your sleeves.
- Wear safety glasses when working under conditions that are hazardous to your eyes.
- Do not perform any action that creates a potential hazard to people or makes the equipment or rack unsafe.
- Keep walkways clear of tools, power cables, and parts to prevent them from being stepped on or causing people to trip and fall over them.
- Do not work on the equipment or disconnect cables during a thunderstorm, when wearing a wool sweater or other heavy wool clothing, or when power is applied.
- Keep floors dry to prevent slips and falls.

- Do not use ungrounded power cables.
- Keep the area clear and dust-free during and after installation.
- Do not block or cover equipment openings. Ensure that all equipment has adequate airflow. Failure to follow these guidelines can cause overheating and affect the system reliability.
- The rack is equipped with casters so that you can move it short distances to position it for final installation. Use enough personnel when moving a rack, especially on sloping loading docks and ramps to a raised computer room floor. Move the cabinet slowly and deliberately, and make sure that the floor is free from foreign objects and cables that the cabinet could roll over.



WARNING: To avoid injury, wear protective footwear when moving equipment.

Warning about moving parts

Even though customers do not install or maintain equipment, these guidelines are provided to prevent possible injury when working with authorized service personnel. Observe the following warning related to moving parts:

- Tuck in any loose clothing so that it cannot be caught by a moving or rotating part such as a fan.
- Tie up long hair.
- Unless otherwise specifically instructed, do not supply power to any device that contains rotating or moving parts that are not properly covered.

Electrical safety guidelines

Even though customers do not install or maintain equipment, these guidelines are provided to prevent possible injury when working with authorized service personnel in the area where equipment is installed. Observe the following electrical safety guidelines:

- Disconnect all power before installation, deinstallation, or moving equipment.
- Ensure that the voltage and frequency of your power source match the voltage and frequency required by the system.
- All equipment should be properly grounded for proper operation and safety. To reduce the risk of electric shock or damage to equipment, follow proper grounding procedures.

3

Installation requirements

This chapter provides site and system requirements and specifications that are needed to plan a Hitachi Virtual Storage Platform storage system installation and prepare the site where the system will be installed, so that the equipment installation is efficient and trouble-free.

This chapter may not provide all the information needed for every installation. The installation and maintenance documents used by Hitachi Data Systems personnel contain complete information, including specifications for all possible installations. Contact Hitachi Data Systems support if you need information that is not included in this chapter.

- ☐ Safety requirements
- ☐ General site requirements
- ☐ Data center requirements
- ☐ System specifications and requirements
- ☐ Environmental specifications
- ☐ Service clearance, floor cutout, and floor load rating
- ☐ Operational requirements

Safety requirements

Caution: Before operating or working on the Virtual Storage Platform , read the safety and environmental information in Safety requirements on page 2-1.

General site requirements

The customer site must accommodate the delivery and movement of the equipment from the receiving dock to the installation location in the data center.

Equipment clearances

Receiving area: The receiving dock, storage area, and receiving area must be large enough to allow movement of and access to crated or packed equipment. The dimensions of a shipping crate for a single rack are shown in the following table.

Table 3-1 VSP shipping crate dimensions

Item	Height	Width	Depth
Shipping crate, single rack	84 in. / 2134 mm	42 in. / 1067 mm	55 in. / 1397 mm

Other areas: The hallways, doorways, ramps, and elevators must be large enough to allow a single unpacked rack to be moved to the installation location. Unless the distance between the receiving dock and the data center is very long, Virtual Storage Platform storage systems are typically unpacked in the receiving area and the individual racks with pre-installed equipment are rolled on their casters to the data center. The following table provides the dimensions of the VSP storage system.

Table 3-2 VSP single rack dimensions

Item	Height	Width	Depth
Single rack	73.1 in. / 2005 mm	24.0 in. / 610 mm	43.3 in. /1100 mm

Equipment weight

The floors, elevators, and ramps must be able to support the weight of the delivered equipment as it is moved to the installation location. Spreader plates may be required to distribute the load and protect the floor as the equipment is moved from the receiving area to the installation location. Consult the system bill of materials to establish the anticipated summary weights.

The weight of the equipment depends on the storage system configuration. The weight for a fully configured storage system can reach **9784** pounds / **4413** kilograms). The following table provides weights of typical system configurations.

Note: The data in the following table was taken from measurements of a system in a controlled environment. To calculate the weight of a specific system, use the Power and Weight Calculator at

http://www.hds.com/go/weight-and-power-calculator/

Contact technical support if you need assistance using this tool.

Table 3-3 Weight of typical VSP system configurations

Dimension		Single Rack	Single Module (3 racks)	Dual Module (6 racks)
System Weight	Min (lbs / kg)	767 / 346 (Diskless)	3610 / 1628	7503 / 3384
	Max (lbs / kg)	862 / 389	4592 / 2071	9784 / 4413
Rack Weight	(lbs / kg)	292.6 / 133	Rack Weight is included in system weight	

Storage Requirements

If the equipment must be stored after delivery and prior to installation, the storage location must meet the storage environmental requirements for the VSP storage system. See Environmental specifications on page 3-13 in this chapter for environmental storage requirements.

Data center requirements

The data center must meet the following facilities requirements:

Table 3-4 Data center requirements

Item	Description
General	The data center must provide appropriate power, air conditioning, cabling, and fire protection.
ESD	The data center must provide adequate protection from electrostatic discharge (ESD).
Electrical interference	The data center must provide adequate protection from electrical/radio frequency interference.
Contamination	The data center must provide adequate protection from dust, pollution, and particulate contamination.
Acoustics	The data center must provide adequate acoustic insulation for operating the system.
User-supplied hardware	This includes cables, connectors, and receptacles that must be available and ready when the system is installed.

System specifications and requirements

This section describes the physical characteristics of a VSP storage system, including

- Mechanical specifications on page 3-4
- Electrical specifications on page 3-5
- Environmental specifications on page 3-13

Mechanical specifications

Basic system dimensions and configurations of the Virtual Storage Platform are shown in the following illustrations. Detailed specifications follow the illustrations.

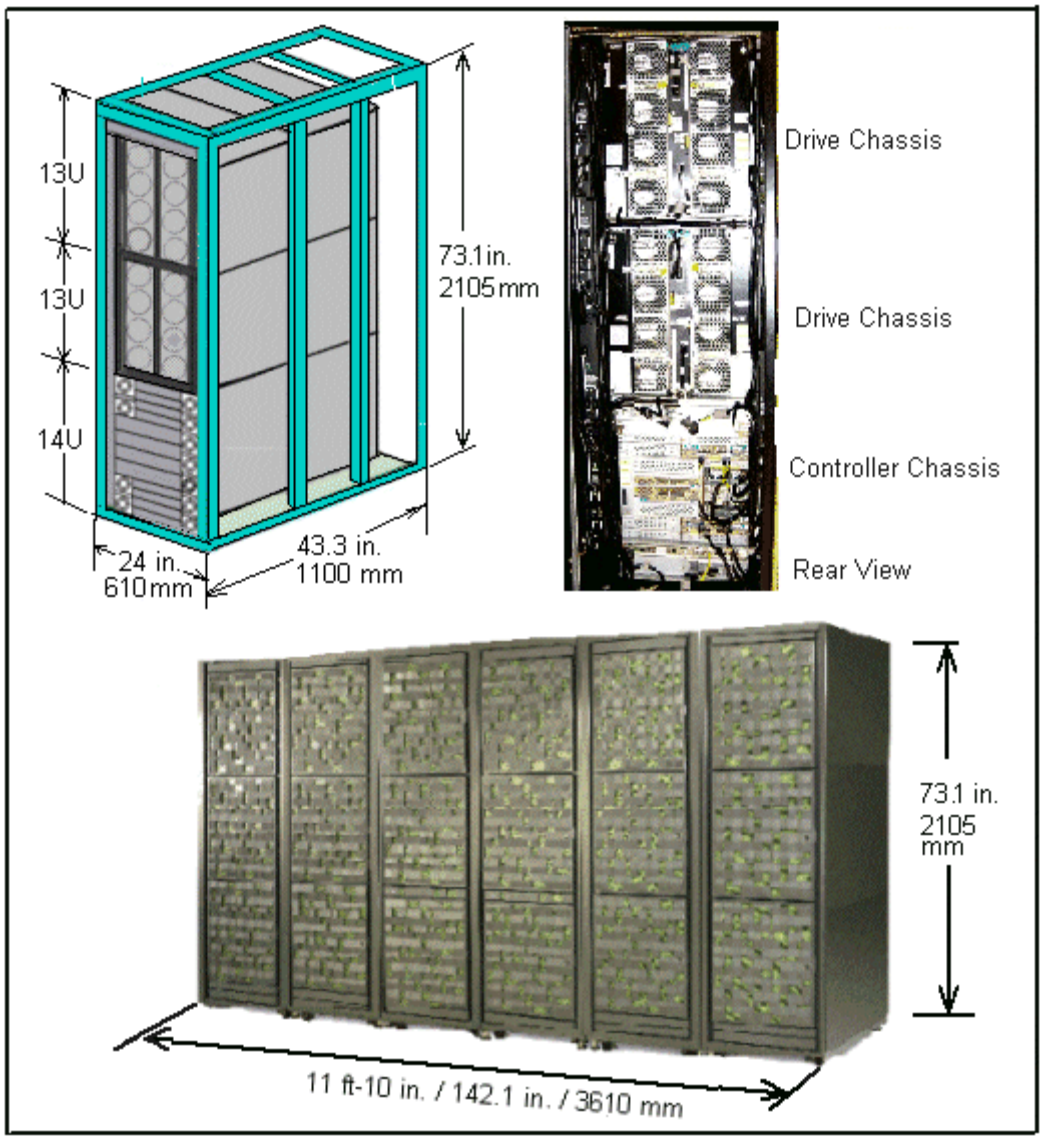

Figure 3-1 Virtual Storage Platform overview

The following table lists the mechanical specifications of the Virtual Storage Platform.

Table 3-5 VSP mechanical specifications

Dimension	One Rack	Two Racks	Three Racks	Four Racks	Five Racks	Six Racks
Width in. / mm	24.0 / 610	47.3 / 1201	71.3 / 1811	94.7 / 2405	118.8 / 3018	142.1 / 3610
Depth in. / mm	43.3 / 1100	43.3 / 1100	43.3 / 1100	43.3 / 1100	43.3 / 1100	43.3 / 1100
Height in. / mm	73.1 / 2005	73.1 / 2005	73.1 / 2005	73.1 / 2005	73.1 / 2005	73.1 / 2005

Electrical specifications

Note: The current and power specifications in the following tables were measured on a VSP system in a controlled environment. To calculate the power and current draw of a specific system, use the Power and Weight calculator at

http://www.hds.com/go/weight-and-power-calculator/

Contact technical support if you need assistance using this tool.

The following table lists the electric power requirements and approximate power consumption of a typical VSP storage system. Detailed electrical specifications are located in the Hitachi Virtual Storage Platform User and Reference Guide.

Table 3-6 VSP electric power requirements

Phase	Voltage	Frequency	Power, Operating	Power, Standby
AC, single phase 2 wire + ground	200 V -8% min 240 V +6% max	50 ±3 Hz 60 ±2 Hz	41.4 KVA, maximum	23.02 KVA, maximum
AC, three phase delta See Table 3-8 PDU plugs, circuit breakers, and receptacles1 on page 3-7 for connections.	208 V +5/-15%	50/60 Hz	41.4 KVA, maximum	23.02 KVA, maximum

Table 3-7 Power consumption, single phase current

Configuration	Idle	Max Power Consumption[2]
	Current per rack (KW)7, 8	Current per rack (KW)7, 8
R00 (module 0 controller)	17.3	19.6

Configuration	Idle	Max Power Consumption[2]
	Current per rack (KW)7, 8	Current per rack (KW)7, 8
R10 (module 1 controller)	18.2	17.9
R01 (module 0 drive 1)	14.8	18.3
R11 (module 1 drive 1)	16.1	19.6
R02 (module 0 drive 2)	17.2	17.1
R12 (module 1 drive 2)	14.4	18.6
Total Power	98	111.1

Notes:

1. Data taken from measurements on a VSP storage system in a controlled environment.
2. Idle condition - system is powered on but not being accessed
3. Max power consumption - all disks are in write mode.
4. R00 and R01 are controller racks with one controller chassis and two drive chassis.
5. R01, R02, R11, and R12 are drive racks with three drive chassis each.
6. Total 2048 146 GB SAS drives.
7. power Factor 0.96
8. Voltage 210Vac

Grounding

The site and site equipment must meet all of the following three grounding requirements.

- An insulated grounding conductor that is identical in size and insulation material and thickness to the grounded and ungrounded branch-circuit supply conductors. It must be green, with or without yellow stripes, and must be installed as a part of the branch circuit that supplies the unit or system.
- The grounding conductor described above should be connected to earth ground at the service equipment or other acceptable building earth ground. In the case of a high rise steel-frame structure, this can be the steel frame
- The attachment-plug receptacles in the vicinity of the unit or system must include a ground connection. The grounding conductors serving these receptacles must be connected to earth ground at the service equipment or other acceptable building earth ground.

Power connection

The AC power input for the VSP storage system has a duplex PDU structure that enables the equipment installed in the entire rack to remain powered on if power is removed from one of the two power distribution panels.



Note: Site power can be connected to the PDUs at either the top or bottom of the racks.

PDU plugs, circuit breakers, and receptacles

The PDU plugs must be appropriate for the power sources at the installation sites. Table 3-8 PDU plugs, circuit breakers, and receptacles1 on page 3-7 lists the plugs on the end of the PDU power cords. The power distribution panel at the installation site must have connectors that match these plugs.

Note: Depending on the configuration, the VSP storage system may draw considerably less power than the rating of the PDU plugs. Use the weight and power calculator to determine the power draw for a specific system. See the note on pageElectrical specifications on page 3-5.

Table 3-8 PDU plugs, circuit breakers, and receptacles[1]

Phase	Location	PDU Plug	Max Voltage Rating	Max Current Rating	No. of CB per PDU	Breaker Rating	Power Supply Receptacle IEC C14 [2]
Single	Americas (except Brazil)	NEMA L6 30P twistlock 2 pole, 3 wire A + B + gnd	208 V	30 A per PDU	2	16 A, 20 A trip	2 pole, 3 wire 220 VAC A + B + gnd
	EMEA / APAC/ Brazil	IEC 309, blue 2 pole, 3 wire A + B + gnd	230 V	32 A per PDU	2	16 A, 20 A trip	2 pole, 3 wire 220 VAC A + B + gnd
Three	Americas including Brazil	NEMA L15 30P twistlock 3 pole, 4 wire A + B + C + gnd	208 V	30 A per phase	3 UL489	15 A 2 pole	2 pole, 3 wire 220 VAC A-B or B-C + gnd
	APAC/ EMEA	IEC 309, red 4 pole, 5 wire A + B + C + Neut + gnd	400 V	32 A per phase	6	16 A 2 pole	1 pole, 3 wire 200 VAC A-N or B-N or C-N + gnd
Required number of plugs in each PDU per chassis			Controller chassis 4		Drive chassis 4		Same power cord and plug for all power supplies.
Required number of PDUs per rack			Controller rack 2 if only controller installed 4 if controller and drive chassis		Drive rack 4		Same power cord and plug for all PDPs.

NOTES:

1. The numbers in this table were taken from the PDU manufacturer's specifications.
2. This information shows how the receptacles is wired inside the PDU. The equivalent IEC plug for this receptacle is IEC 13.

Power connection diagrams

The following illustrations show the correct way to connect the PDUs to the PDPs. When connected as shown, either of the AC inputs can fail and the system will still operate normally.

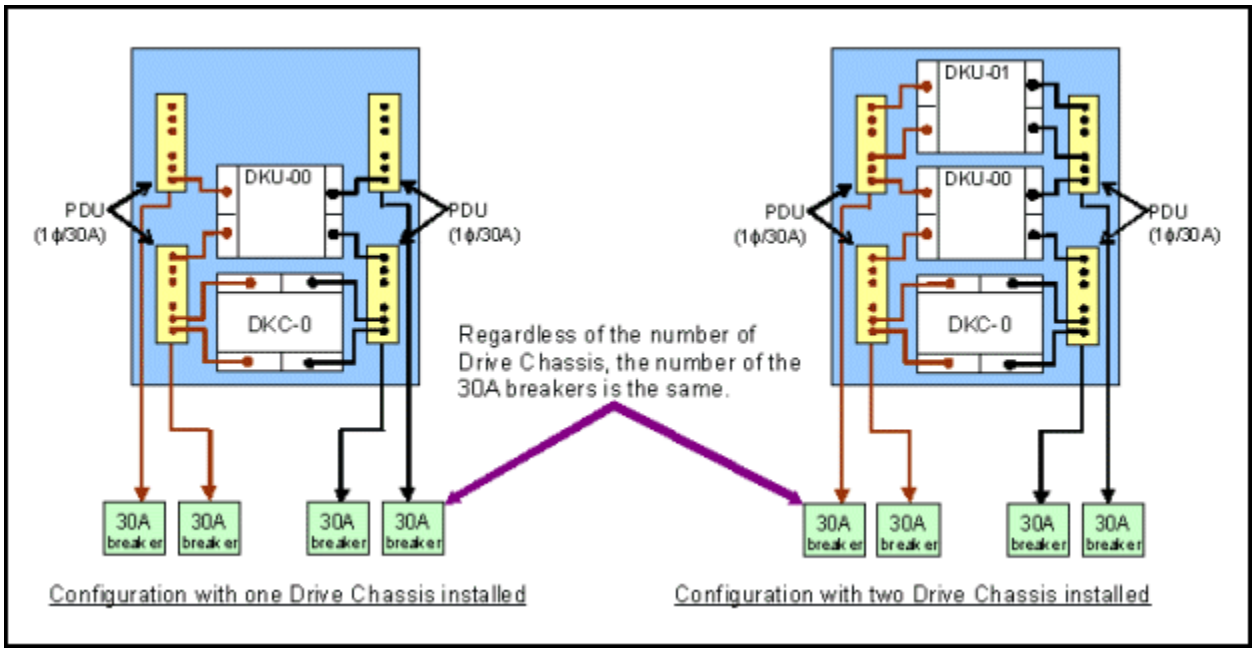

Figure 3-2 PDP breaker connections for a control rack with DKU drive chassis

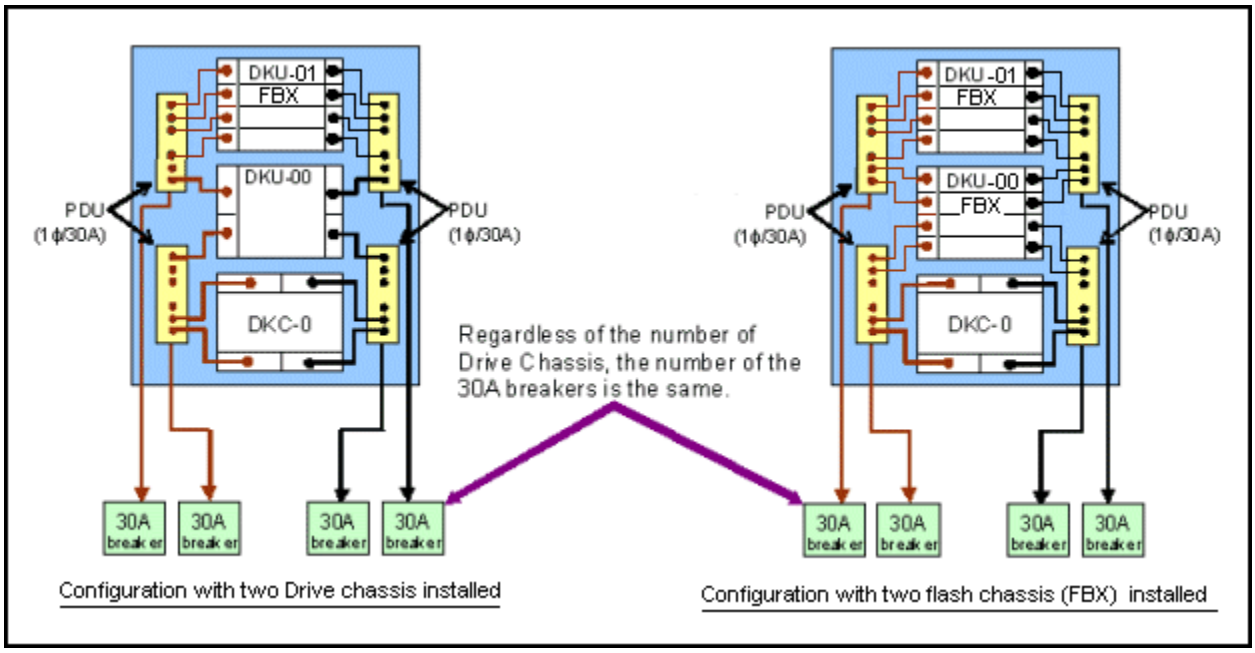

Figure 3-3 PDP breaker connections for a control rack with FBX flash chassis

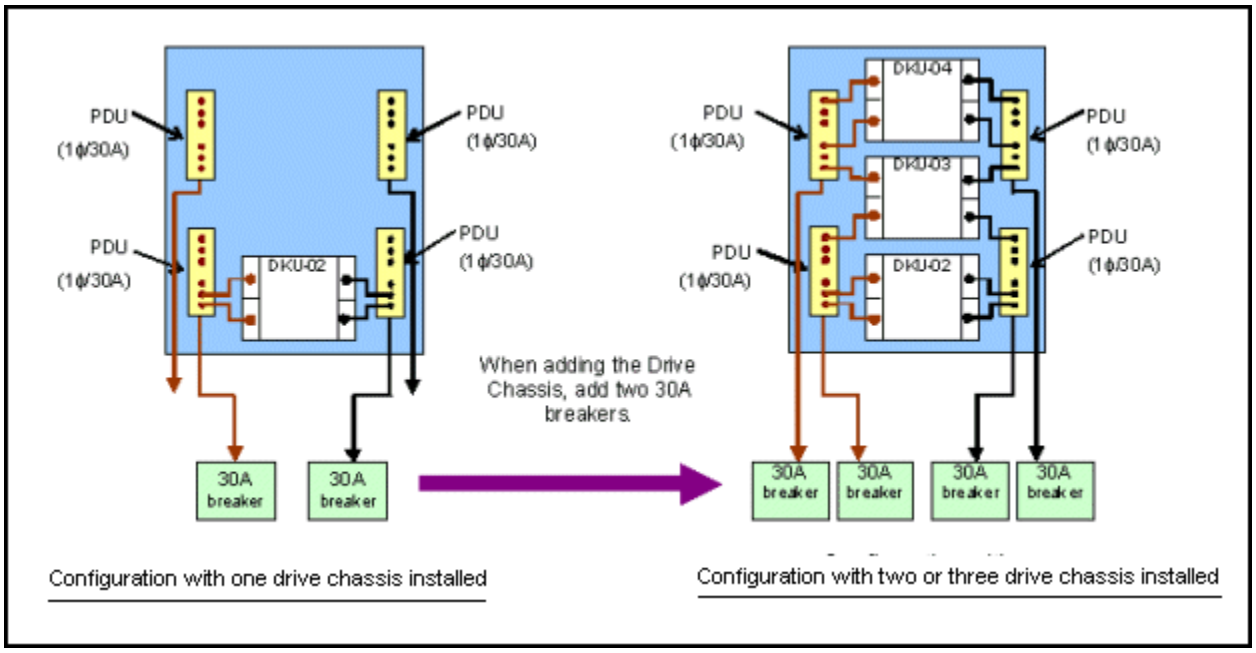

Figure 3-4 PDP breaker connections for a drive rack with DKU drive chassis

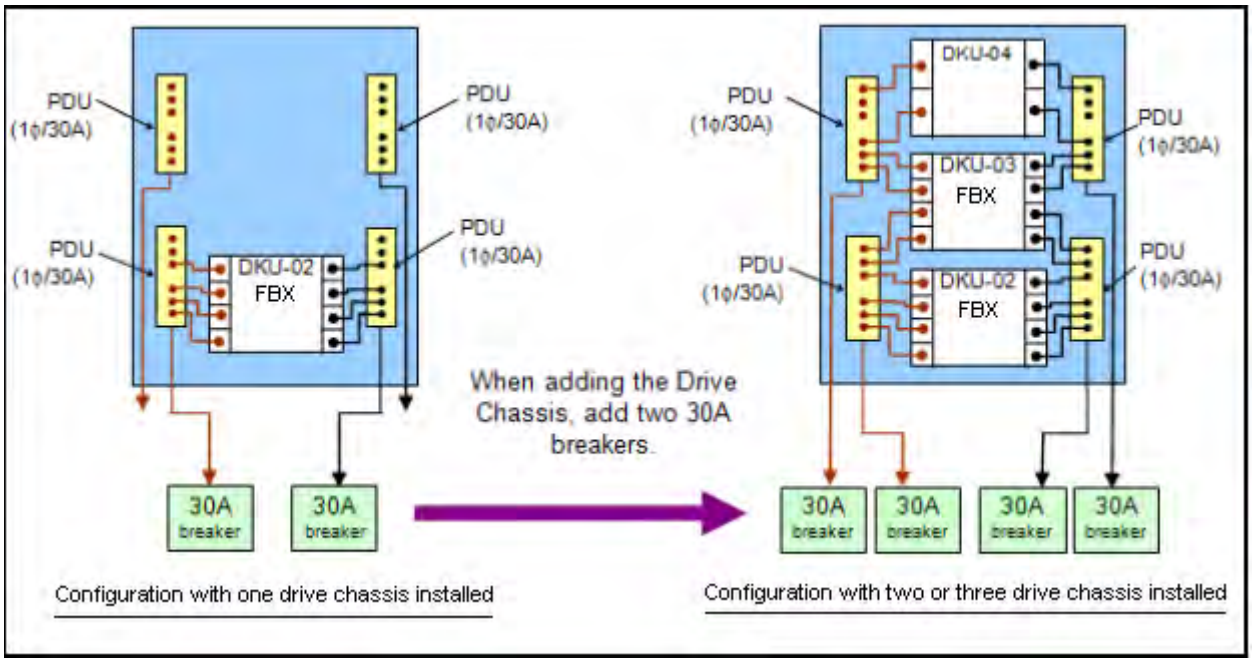

Figure 3-5 PDP breaker connections for a drive rack with two FBX flash chassis

Caution: When installing a system, do not cross-connect the AC cables as shown in the following illustration. Otherwise, a system failure can occur when either of the AC inputs is interrupted.

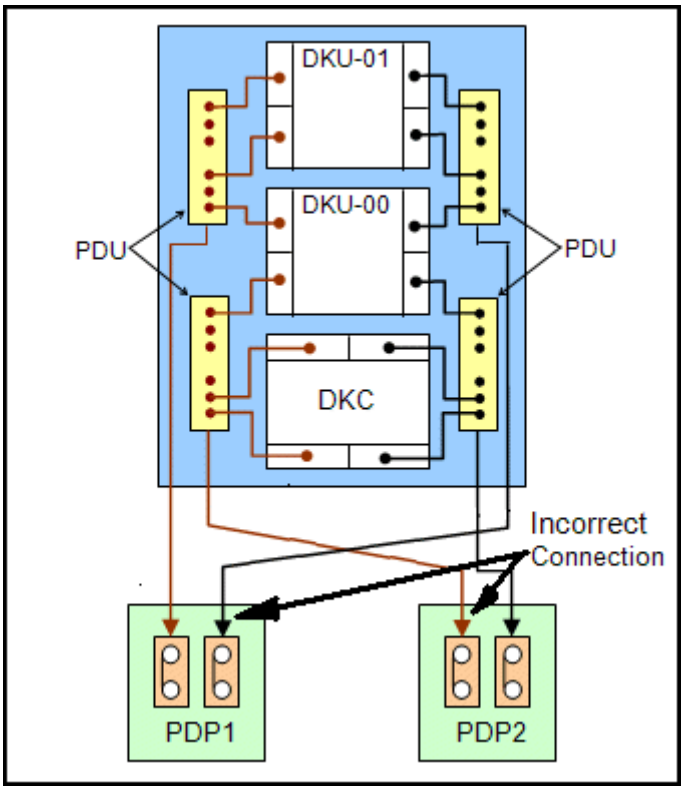

Figure 3-6 Incorrect breaker configurations for the controller rack

Flash chassis cabling

The following illustrations show the correct way to connect the ENC adapters to the controller chassis.

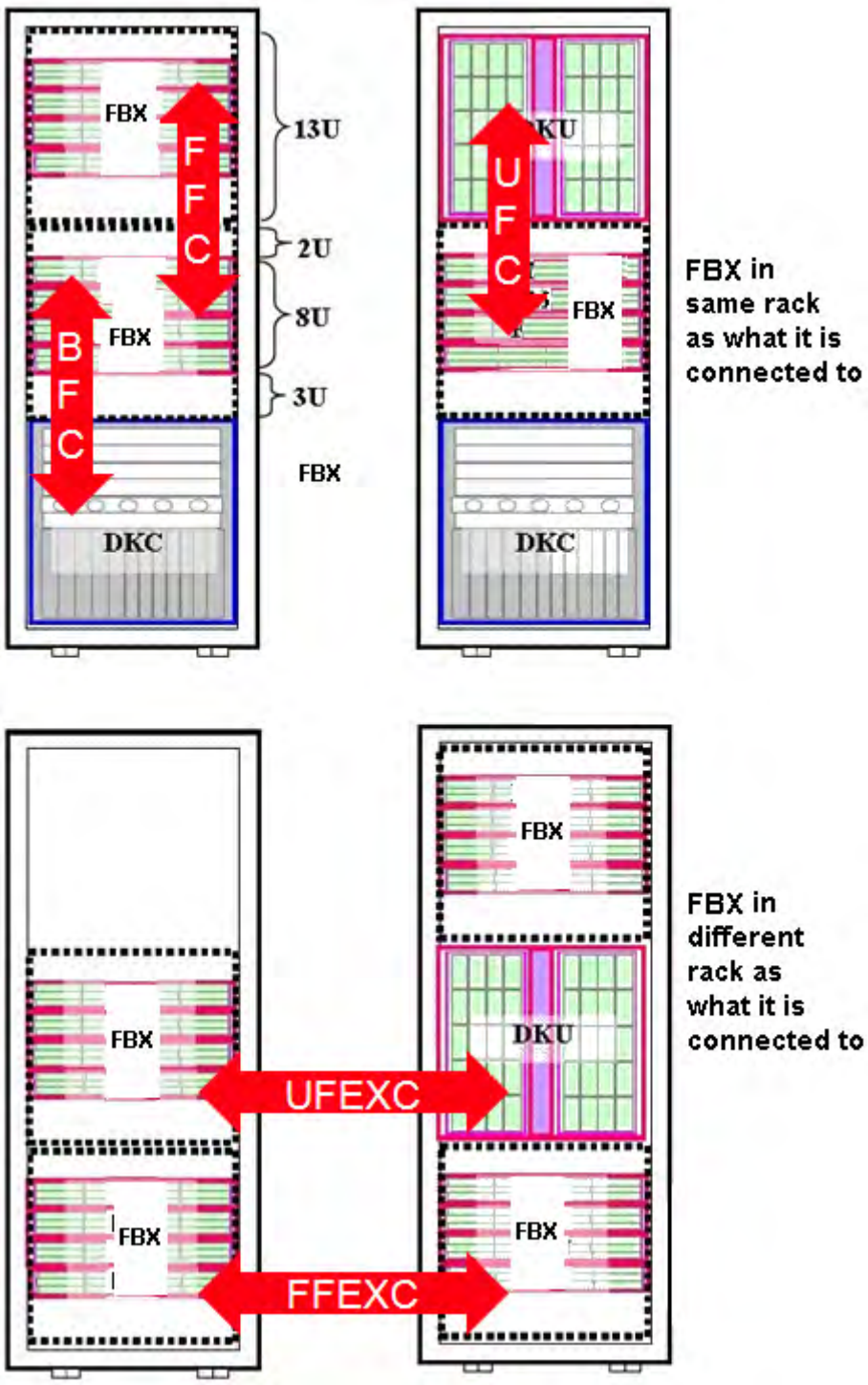

Figure 3-7 Flash chassis cabling for standard performance models

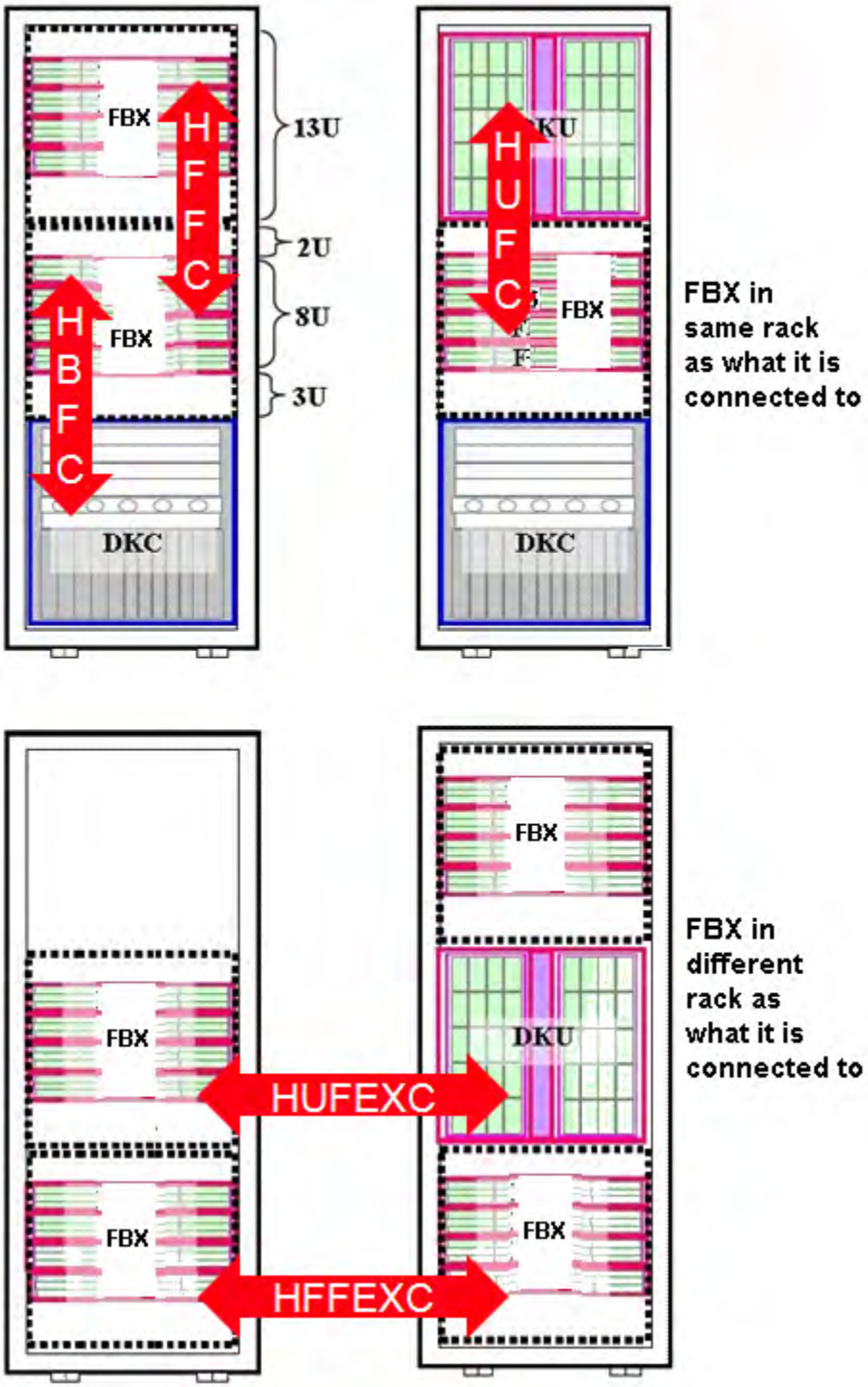

Figure 3-8 Flash chassis cabling for high performance models

Environmental specifications

The following table lists the environmental specifications of the VSP storage system.

Table 3-9 Virtual Storage Platform Environmental specifications

Item	Operating	Not Operating	In Storage
Temperature (ºF / ºC)	60.8 - 89.6 / 16 to 32	-18 - 109.4 -10 to 43	-45 - 140 -25 to 60
Relative Humidity (%)[4]	20 to 80	8 to 90	5 to 95
Max. Wet Bulb (ºF / ºC)	78.8 / 26	80.6 / 27	84.2 / 29
Temperature Deviation per hour (ºF / ºC)	18 / 10	18 / 10	36 / 20
Vibration to 10Hz: 0.25 mm	10 to 300 Hz 0.49 m/s^2	5 to 10 Hz: 2.5 mm 10 to 70 Hz: 4.9 m/s^2 70 to 99 Hz: 0.05 mm 99 to 300 Hz: 9.8 m/s^2	Sine Vibration: 4.9 m/s^2, 5 min. At the resonant frequency with the highest displacement found between 3 to 100 Hz [6]
			Random Vibration: 0.147 m2/s3 30 min, 5 to 100 Hz [7]
Earthquake resistance (m/s2)	Up to 2.5 [10]	-	-
Shock	-	78.4 m/s^2, 15 ms	Horizontal: Incline Impact 1.22 m/s[8]
			Vertical: Rotational Edge 0.15 m[9]
Altitude	-60 m to 3,000 m		-

Notes:

1. Environmental specification for operating condition should be satisfied before the storage system is powered on. Maximum temperature of 32°C should be strictly satisfied at air inlet portion.
2. Recommended temperature range is 21 to 24°C
3. Non-operating condition includes both packing and unpacking conditions unless otherwise specified.
4. On shipping/storage condition, the product should be packed with factory packing
5. No condensation in and around the drive should be observed under any conditions. No condensation in and around the drive should be observed under any conditions.
6. The above specifications of vibration are applied to all three axes
7. See ASTM D999-01 The Methods for Vibration Testing of Shipping Containers.
8. See ASTM D5277-92 Test Method for Performing Programmed Horizontal Impacts Using an Inclined Impact Tester.
9. See ASTM D6055-96 Test Methods for Mechanical Handling of Unitized Loads and Large Shipping Cases and Crates.
10. Time is 5 seconds or less in case of the testing with device resonance point (6 to 7Hz.

Service clearance, floor cutout, and floor load rating

This section describes the service clearance requirements for the VSP storage system, based on the floor load rating and the clearance and required floor cutouts for cabling. The figures and tables that provide this information are listed in the following table.

Table 3-10 Service Clearance and floor load ratings

Service Clearance and Floor Load Rating	
Number of racks	**Section**
1	Single rack configuration on page 3-14
2	Two-rack configuration (one controller) on page 3-16
2 (two DKC)	Two-rack configuration (two controllers) on page 3-18
3 (left module)	Three-rack configuration (left module) on page 3-20
3 (right module)	Three-rack configuration (right module) on page 3-22
4 (left module)	Four-rack configuration (left module) on page 3-24
4 (right module)	Four-Rack configuration (right module) on page 3-26
5	Five-rack configuration on page 3-28
6	Six-rack configuration on page 3-30

Note: For safe and efficient maintenance operations, clearance (c) should be made as large as possible. Actual clearances for installation should be determined after consulting with the site/facilities manager, as the clearances can vary, depending on building conditions.

Single rack configuration

The following figure and table show the service clearances and floor load rating for a single rack configuration.

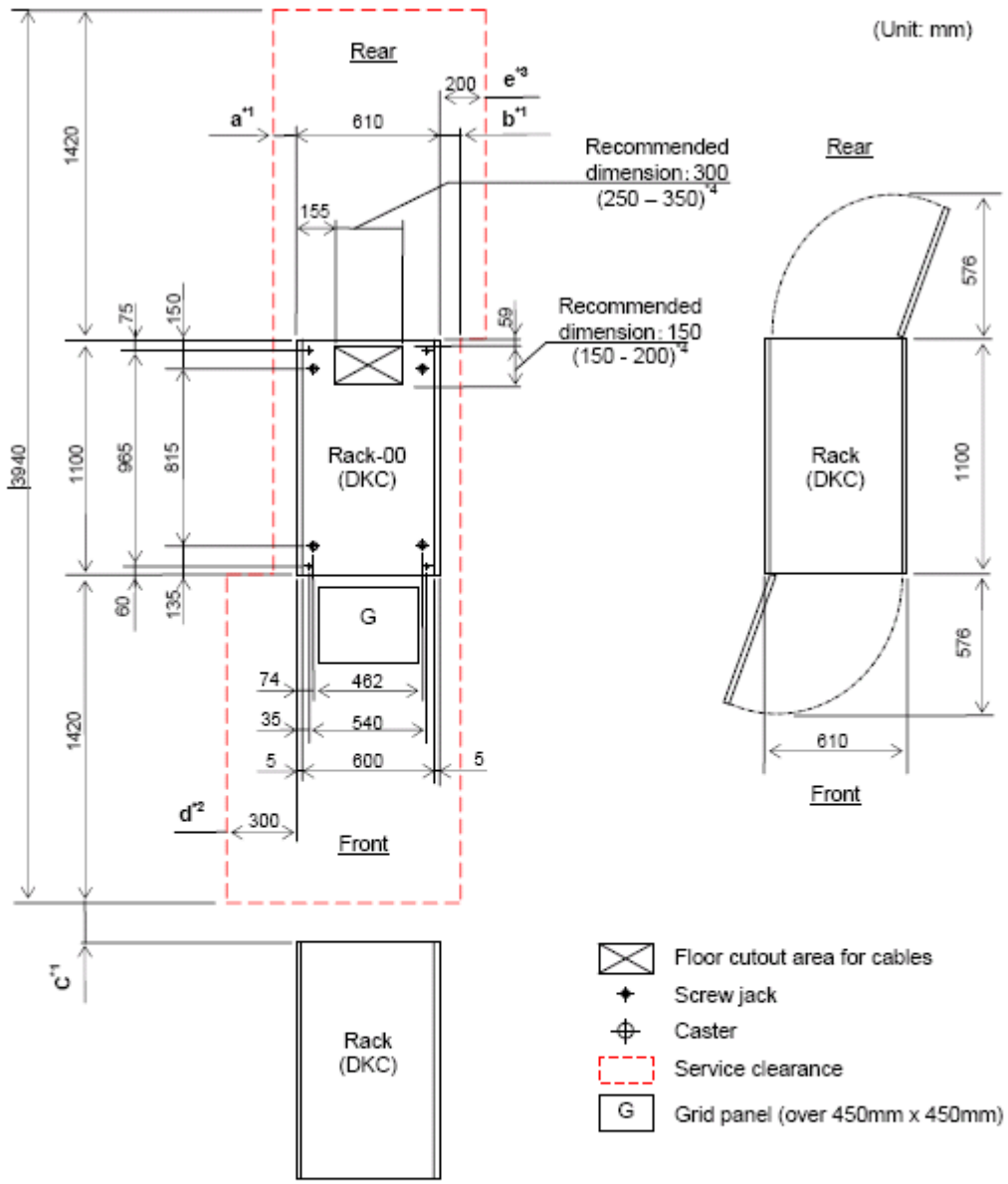

*1: Clearance (a+b) is based on the floor load rating and clearance (c).
Floor load rating and required clearances are shown in the table following this figure.
*2: Clearance (d) must be over 300mm to open the front door.
In case that clearance (d) is less than clearance (a), give priority to clearance (a).
*3: Clearance (e) must be over 200mm to open the rear door.
In case that clearance (e) is less than clearance (b), give priority to clearance (b).
*4: Dimensions in parentheses show allowable range of the floor cutout dimensions. Basically, position the floor cutout in the center of the rack. However, the position may be off-center as long as the cutout allows smooth entrance of an external cable (check the relation between the positions of the cutout and the opening on the bottom plate of the rack) and it is within the allowable range.

Figure 3-9 Service Clearances, single rack system

Table 3-11 Floor load rating and required clearances for single-rack configuration

Floor Load Rating (kg/m2)	Required Clearance (a+b) m				
	Clearance (c) m				
	C=0	C=0.2	C=0.4	C=0.6	C=0.6
500	0.	1	0	0	0
450	0.2	0.1	0.1	0	0
400	0.3	0.3	0.2	0.1	0.1
350	0.5	0.4	0.4	0.3	0.2
300	0.9	0.8	0.7	0.6	0.4

Notes:

1. Actual clearances for installation should be determined after consulting with construction specialist responsible for installation building, as they could vary depending on the size/layout of the system and building conditions.
2. When various configurations of storage systems are arranged in a row, clearance values based on the largest storage system configuration should be used.
3. From the viewpoint of maintenance operations, it is suggested that Clearance (c) be made as large as possible.

Two-rack configuration (one controller)

The following figure and table shows the service clearances and floor load rating for a two-rack configuration.

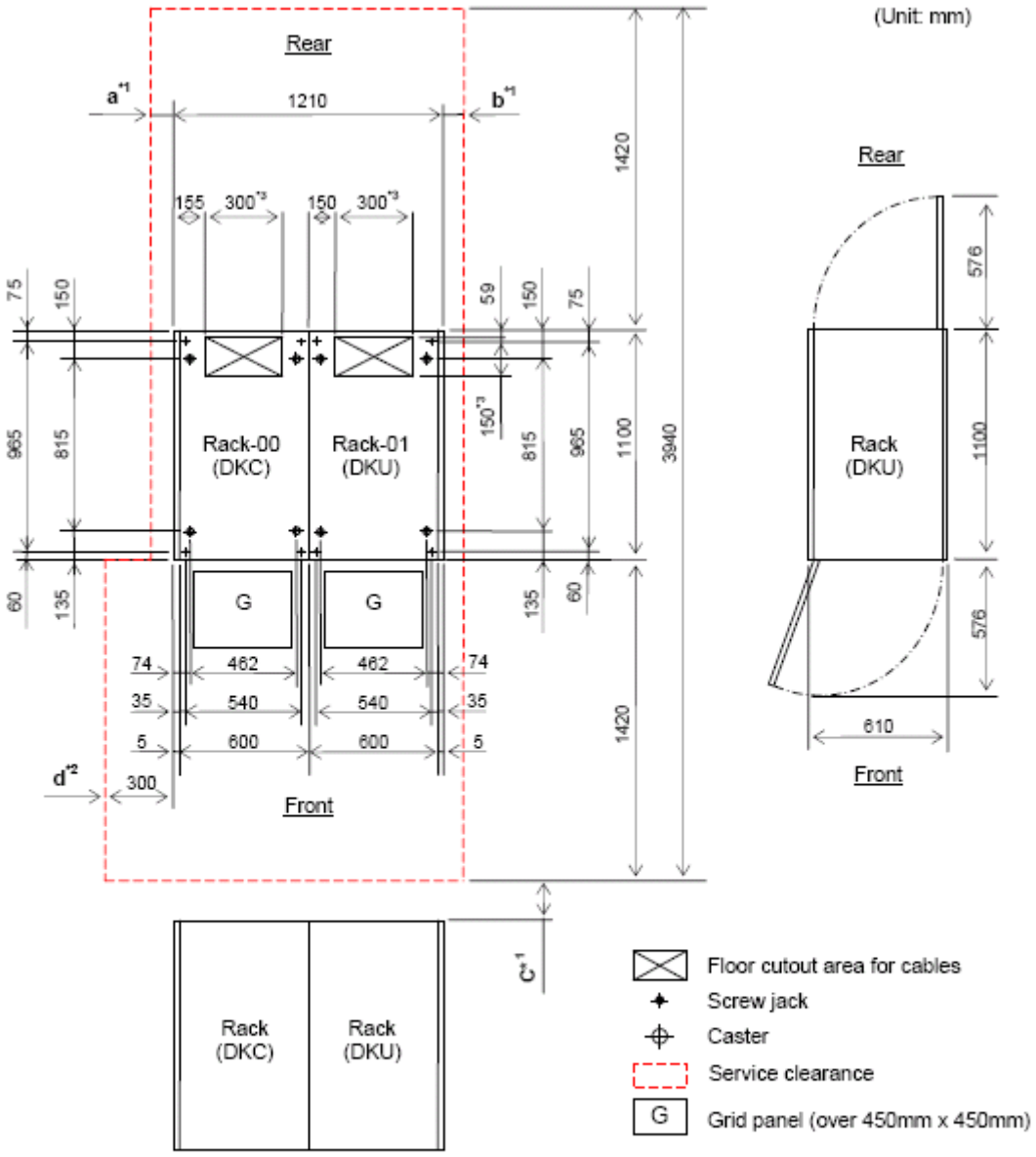

*1: Clearance (a+b) is based on the floor load rating and the clearance (c).
Floor load rating and required clearances are shown in the table following this figure.
*2: Clearance (d) must be over 300 mm to open the front door.
If clearance (d) is less than clearance (a), give priority to clearance (a).
*3: See Figure 3-4 about details of the single rack floor cutout.

Figure 3-10 Service clearances, two-rack system (single controller)

Table 3-12 Floor load rating and required clearances for two-rack configuration

Floor Load Rating (kg/m2)	Required Clearance (a+b) m				
	Clearance (c) m				
	C=0	C=0.2	C=0.4	C=0.6	C=0.6
500	0.1	0	0	0	0

Floor Load Rating (kg/m2)	Required Clearance (a+b) m				
	Clearance (c) m				
	C=0	C=0.2	C=0.4	C=0.6	C=0.6
450	0.3	0.2	0.1	0	0
400	0.5	0.4	0.3	0.2	0
350	0.9	0.8	0.6	0.5	0.3
300	1.5	1.3	1.2	1.0	0.8

Notes:

1. Actual clearances for installation should be determined after consulting with construction specialist responsible for installation building, as they could vary depending on the size/layout of the system and building conditions.

2. When various configurations of storage systems are arranged in a row, clearance values based on the largest storage system configuration should be used.

3. From the viewpoint of maintenance operations, it is suggested that Clearance (c) be made as large as possible.

Two-rack configuration (two controllers)

The following figure and table shows the service clearances and floor load rating for a two-rack configuration with two DKCs installed.

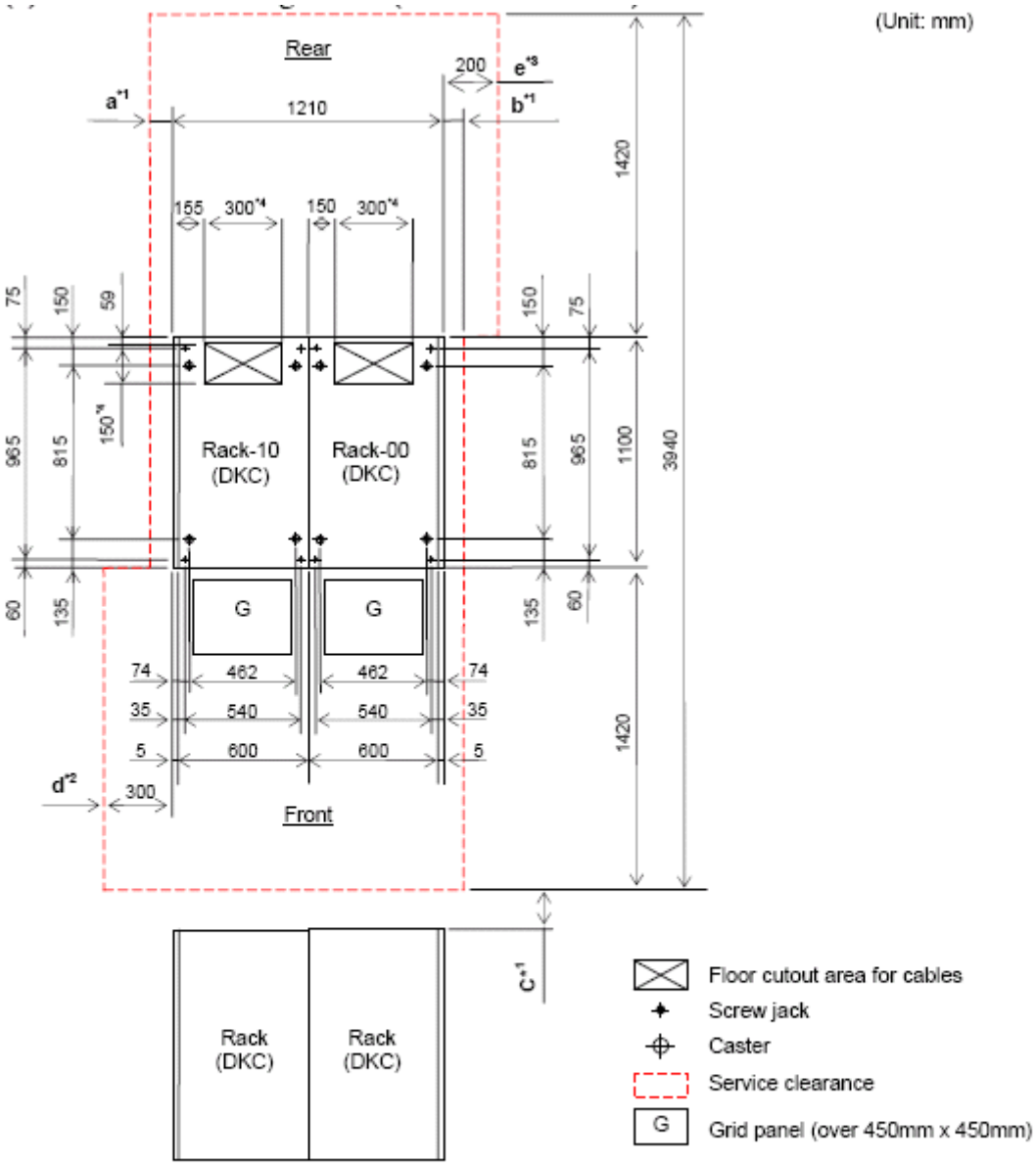

*1: Clearance (a+b) is based on the floor load rating and the clearance (c).
Floor load rating and required clearances are shown in the table following
*2: Clearance (d) must be over 300mm to open the front door.
In case that clearance (d) is less than clearance (a), give priority to clearance (a).
*3: Clearance (e) must be over 200mm to open the rear door.
In case that clearance (e) is less than clearance (b), give priority to clearance (b).
*4: See Figure 3-4 about details of the single rack floor cutout.

Figure 3-11 Service clearances, two-rack system (two controllers)

Table 3-13 Floor load rating and required clearances for two-rack configuration (two controllers)

Floor Load Rating (kg/m2)	Required Clearance (a+b) m				
	Clearance (c) m				
	C=0	C=0.2	C=0.4	C=0.6	C=0.6
500	0.1	0	0	0	0
450	0.3	0.2	0.1	0	0
400	0.5	0.4	0.3	0.2	0
350	0.9	0.8	0.6	0.5	0.3
300	1.5	1.3	1.2	1.0	0.8

Notes:

1. Actual clearances for installation should be determined after consulting with construction specialist responsible for installation building, as they could vary depending on the size/layout of the system and building conditions.
2. When various configurations of storage systems are arranged in a row, clearance values based on the largest storage system configuration should be used.
3. From the viewpoint of maintenance operations, it is suggested that Clearance (c) be made as large as possible.

Three-rack configuration (left module)

The following figure and table shows the service clearances and floor load rating for a three-rack configuration.

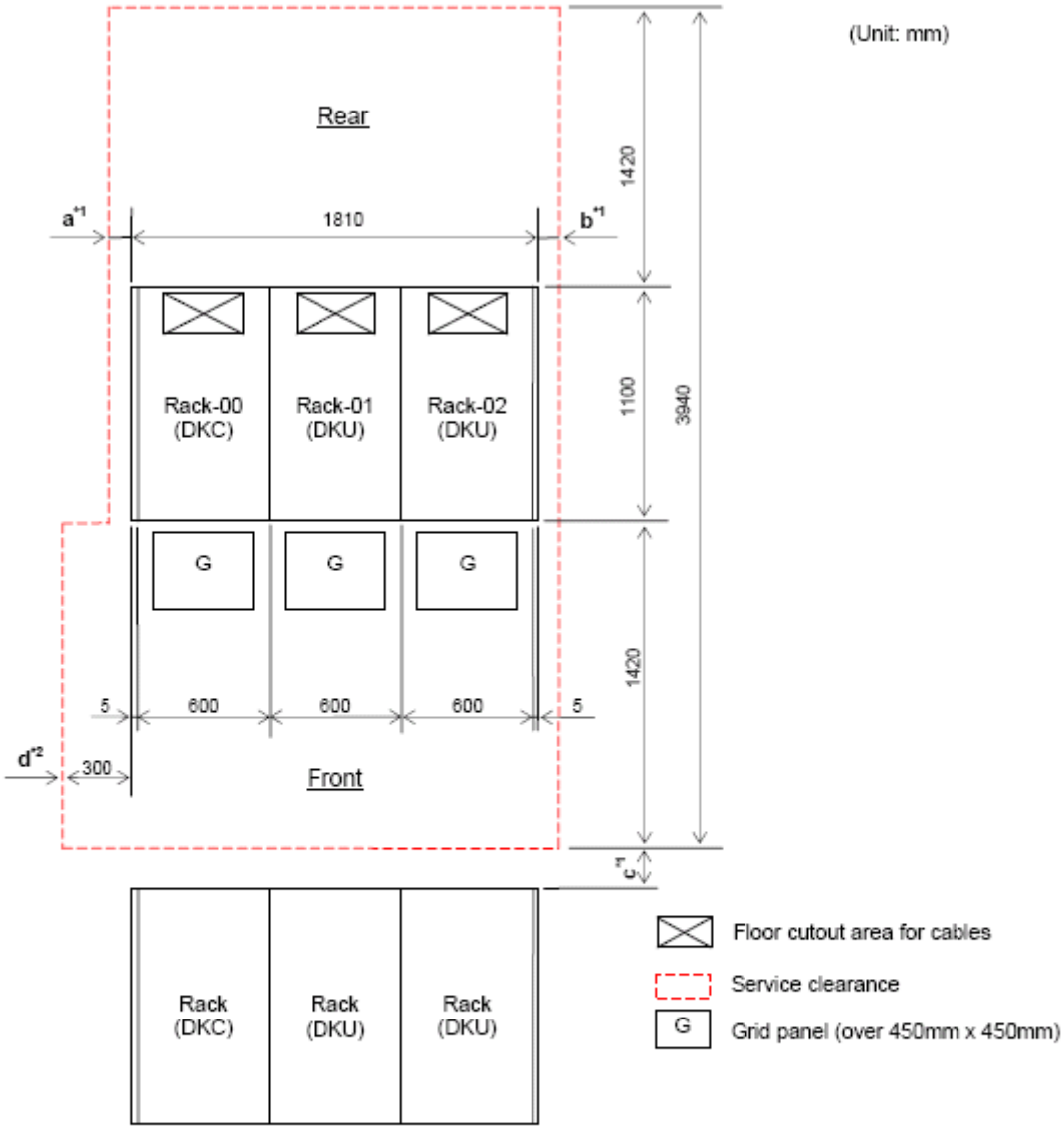

*1: Clearance (a+b) is based on the floor load rating and the clearance (c).
Floor load rating and required clearances are shown in the table following this figure..
*2: Clearance (d) must be over 300mm to open the front door.
In case that clearance (d) is less than clearance (a), give priority to clearance (a).

Figure 3-12 Service clearances, three-rack system (left module)

Table 3-14 Floor load rating and required clearances for the three-rack Configuration (left module)

Floor Load Rating (kg/m2)	Required Clearance (a+b) m				
	Clearance (c) m				
	C=0	C=0.2	C=0.4	C=0.6	C=0.6
500	0.1	0	0	0	0
450	0.4	0.2	0.1	0	0
400	0.8	0.6	0.4	0.3	0

Floor Load Rating (kg/m2)	Required Clearance (a+b) m				
	Clearance (c) m				
	C=0	C=0.2	C=0.4	C=0.6	C=0.6
350	1.3	1.1	0.9	0.7	0.4
300	2.3	1.9	1.7	1.5	1.1

Notes:

1. Actual clearances for installation should be determined after consulting with construction specialist responsible for installation building, as they could vary depending on the size/layout of the system and building conditions.

2. When various configurations of storage systems are arranged in a row, clearance values based on the largest storage system configuration should be used.

3. From the viewpoint of maintenance operations, it is suggested that Clearance (c) be made as large as possible.

Three-rack configuration (right module)

The following figure and table shows the service clearances and floor load rating for a three-rack configuration (Setting Up DKC-RACK in the Right Configuration)

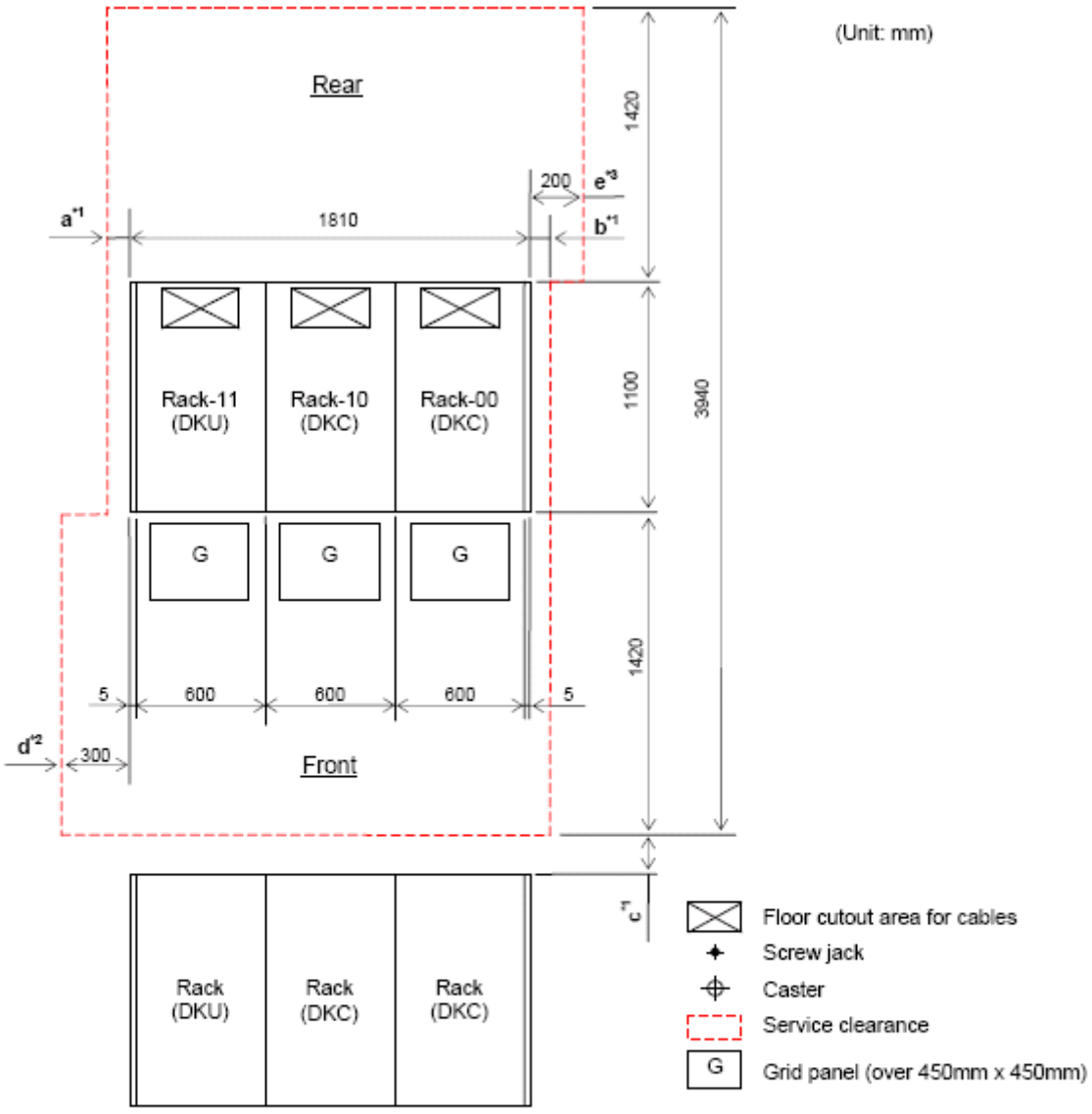

*1: Clearance (a+b) is based on the floor load rating and the clearance (c).
Floor load rating and required clearances are shown in the table following this figure.
*2: Clearance (d) must be over 300 mm to open the front door.
In case that clearance (d) is less than clearance (a), give priority to clearance (a).
*3: Clearance (e) must be over 200mm to open the rear door.
In case that clearance (e) is less than clearance (b), give priority to clearance (b).

Figure 3-13 Service clearances, three-rack system (right module)

Table 3-15 Floor load rating and required clearances for three-rack configuration (right module)

Floor Load Rating (kg/m2)	Required Clearance (a+b) m				
	Clearance (c) m				
	C=0	C=0.2	C=0.4	C=0.6	C=0.6
500	0.1	0	0	0	0
450	0.4	0.3	0.1	0	0

Floor Load Rating (kg/m2)	Required Clearance (a+b) m				
	Clearance (c) m				
	C=0	C=0.2	C=0.4	C=0.6	C=0.6
400	0.8	0.6	0.5	0.3	0 .1
350	1.4	1.2	1.0	0.8	0.5
300	2.3	2.0	1.8	1.5	1.2

Notes:

1. Actual clearances for installation should be determined after consulting with construction specialist responsible for installation building, as they could vary depending on the size/layout of the system and building conditions.

2. When various configurations of storage systems are arranged in a row, clearance values based on the largest storage system configuration should be used.

3. From the viewpoint of maintenance operations, it is suggested that Clearance (c) be made as large as possible.

Four-rack configuration (left module)

The following figure and table shows the service clearances and floor load rating for a four-rack configuration (Setting up DKC rack in the left configuration)

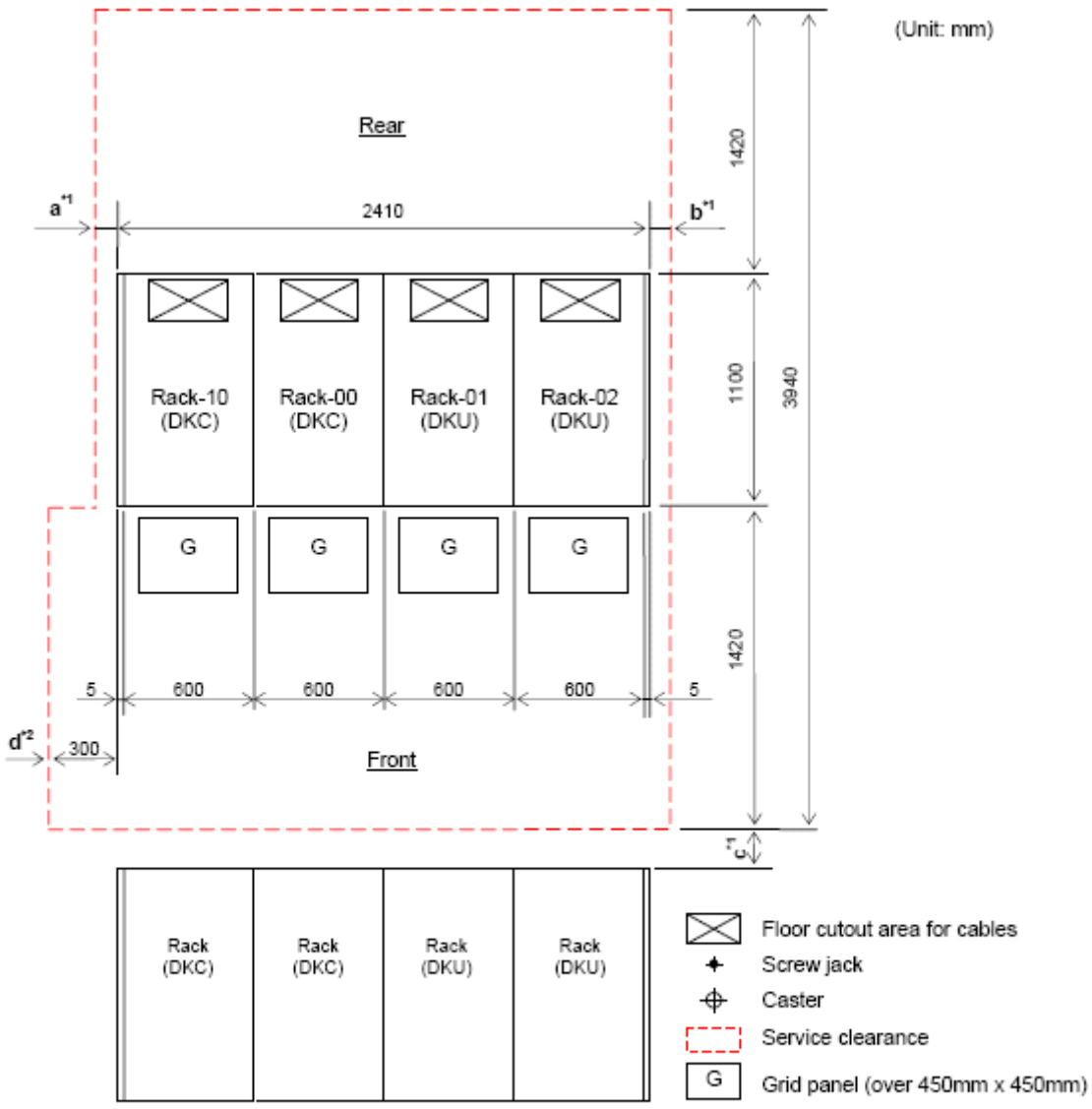

*1: Clearance (a+b) is based on the floor load rating and the clearance (c).
Floor load rating and required clearances are shown in the table following this figure.
*2: Clearance (d) must be over 300 mm to open the front door.
In case that clearance (d) is less than clearance (a), give priority to clearance (a).

Figure 3-14 Service clearances, four-rack system (left module)

Table 3-16 Floor load rating and required clearances for four-rack configuration (left module)

Floor Load Rating (kg/m2)	Required Clearance (a+b) m				
	Clearance (c) m				
	C=0	C=0.2	C=0.4	C=0.6	C=0.6
500	0.1	0	0	0	0
450	0.5	0.3	0.1	0	0
400	1.1	0.8	0.6	0.4	0 .1

Floor Load Rating (kg/m2)	Required Clearance (a+b) m				
	Clearance (c) m				
	C=0	C=0.2	C=0.4	C=0.6	C=0.6
350	1.8	1.5	1.2	1.0	0.6
300	3.0	2.6	2.3	2.0	1.5

Notes:

1. Actual clearances for installation should be determined after consulting with construction specialist responsible for installation building, as they could vary depending on the size/layout of the system and building conditions.

2. When various configurations of storage systems are arranged in a row, clearance values based on the largest storage system configuration should be used.

3. From the viewpoint of maintenance operations, it is suggested that Clearance (c) be made as large as possible.

Four-Rack configuration (right module)

The following figure and table shows the service clearances and floor load rating for a four-rack configuration (setting up a controller rack in the right configuration)

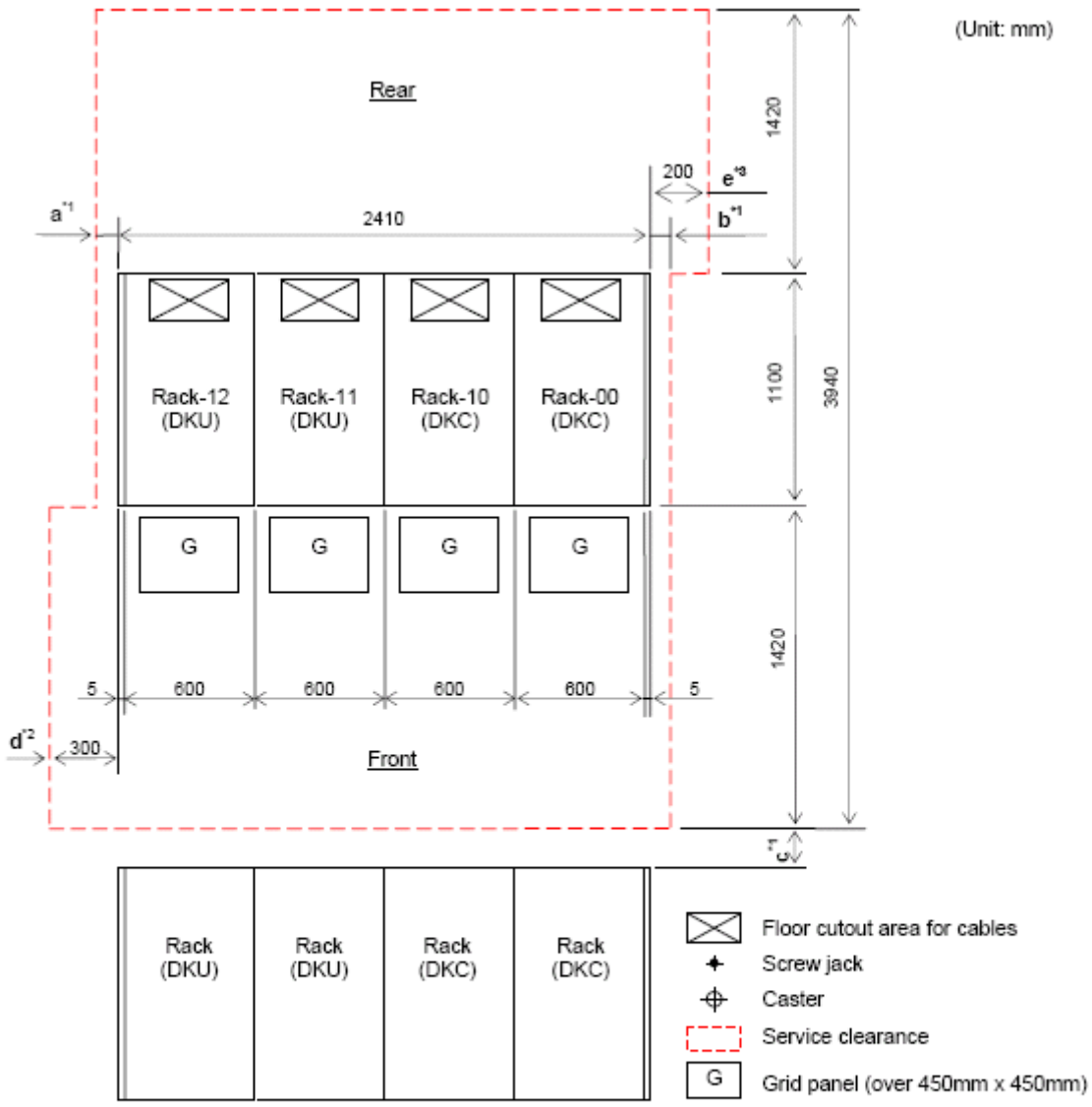

*1: Clearance (a+b) is based on the floor load rating and the clearance (c).
Floor load rating and required clearances are shown in the table following this figure.
*2: Clearance (d) must be over 300 mm to open the front door.
In case that clearance (d) is less than clearance (a), give priority to clearance (a).
*3: Clearance (e) must be over 200mm to open the rear door.
If clearance (e) is less than clearance (b), give priority to clearance (b).

Figure 3-15 Service clearances, four-rack system (right module)

Table 3-17 Floor load rating and required clearances for four-rack configuration (right module)

Floor Load Rating (kg/m2)	Required Clearance (a+b) m				
	Clearance (c) m				
	C=0	C=0.2	C=0.4	C=0.6	C=0.6
500	0.1	0	0	0	0
450	0.5	0.3	0.1	0	0

Floor Load Rating (kg/m2)	Required Clearance (a+b) m				
	Clearance (c) m				
	C=0	C=0.2	C=0.4	C=0.6	C=0.6
400	1.1	0.8	0.6	0.4	0 .1
350	1.8	1.5	1.2	1.0	0.6
300	3.0	2.6	2.3	2.0	1.5

Notes:

1. Actual clearances for installation should be determined after consulting with construction specialist responsible for installation building, as they could vary depending on the size/layout of the system and building conditions.

2. When various configurations of storage systems are arranged in a row, clearance values based on the largest storage system configuration should be used.

3. From the viewpoint of maintenance operations, it is suggested that Clearance (c) be made as large as possible.

Five-rack configuration

This following figure and table shows the service clearances and floor load rating for a five-rack configuration.

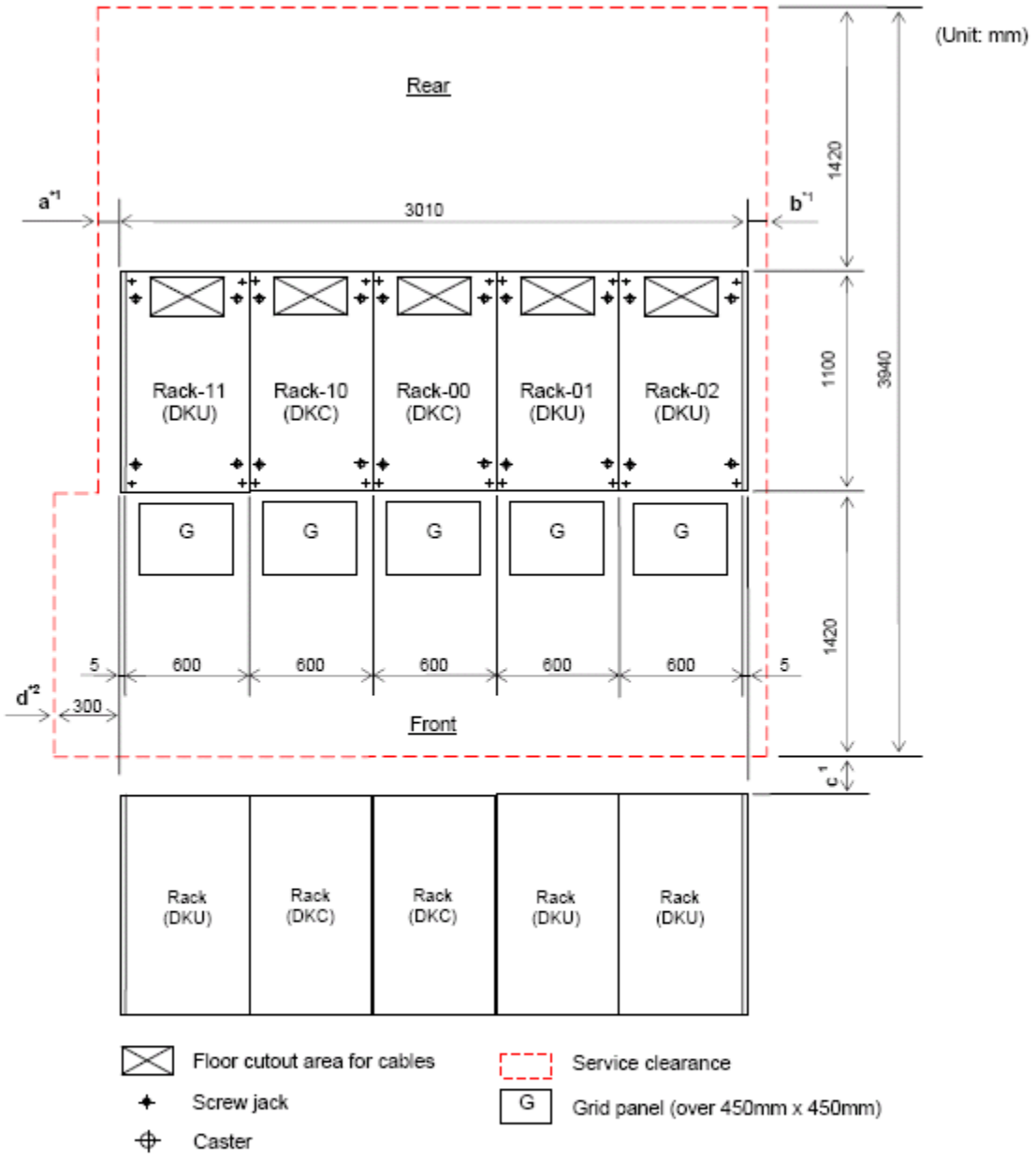

*1: Clearance (a+b) is based on the floor load rating and the clearance (c).
Floor load rating and required clearances are shown in the table following this figure.
*2: Clearance (d) must be over 300 mm as needed to open the front door.
If clearance (d) is less than clearance (a), give priority to clearance (a).

Figure 3-16 Service clearances, five-rack System

Table 3-18 Floor load rating and required clearances for five-rack configuration

Floor Load Rating (kg/m2)	Required Clearance (a+b) m				
	Clearance (c) m				
	C=0	C=0.2	C=0.4	C=0.6	C=0.6
500	0.1	0	0	0	0

Floor Load Rating (kg/m2)	Required Clearance (a+b) m				
	Clearance (c) m				
	C=0	C=0.2	C=0.4	C=0.6	C=0.6
450	0.6	0.3	0.1	0	0
400	1.3	1.0	0.7	0.4	0 .1
350	2.2	1.8	1.5	1.2	0.7
300	3.7	3.2	2.8	2.4	1.8

Notes:

1. Actual clearances for installation should be determined after consulting with construction specialist responsible for installation building, as they could vary depending on the size/layout of the system and building conditions.

2. When various configurations of storage systems are arranged in a row, clearance values based on the largest storage system configuration should be used.

3. From the viewpoint of maintenance operations, it is suggested that Clearance (c) be made as large as possible.

Six-rack configuration

This following figure and table shows the service clearances and floor load rating for a six-rack configuration.

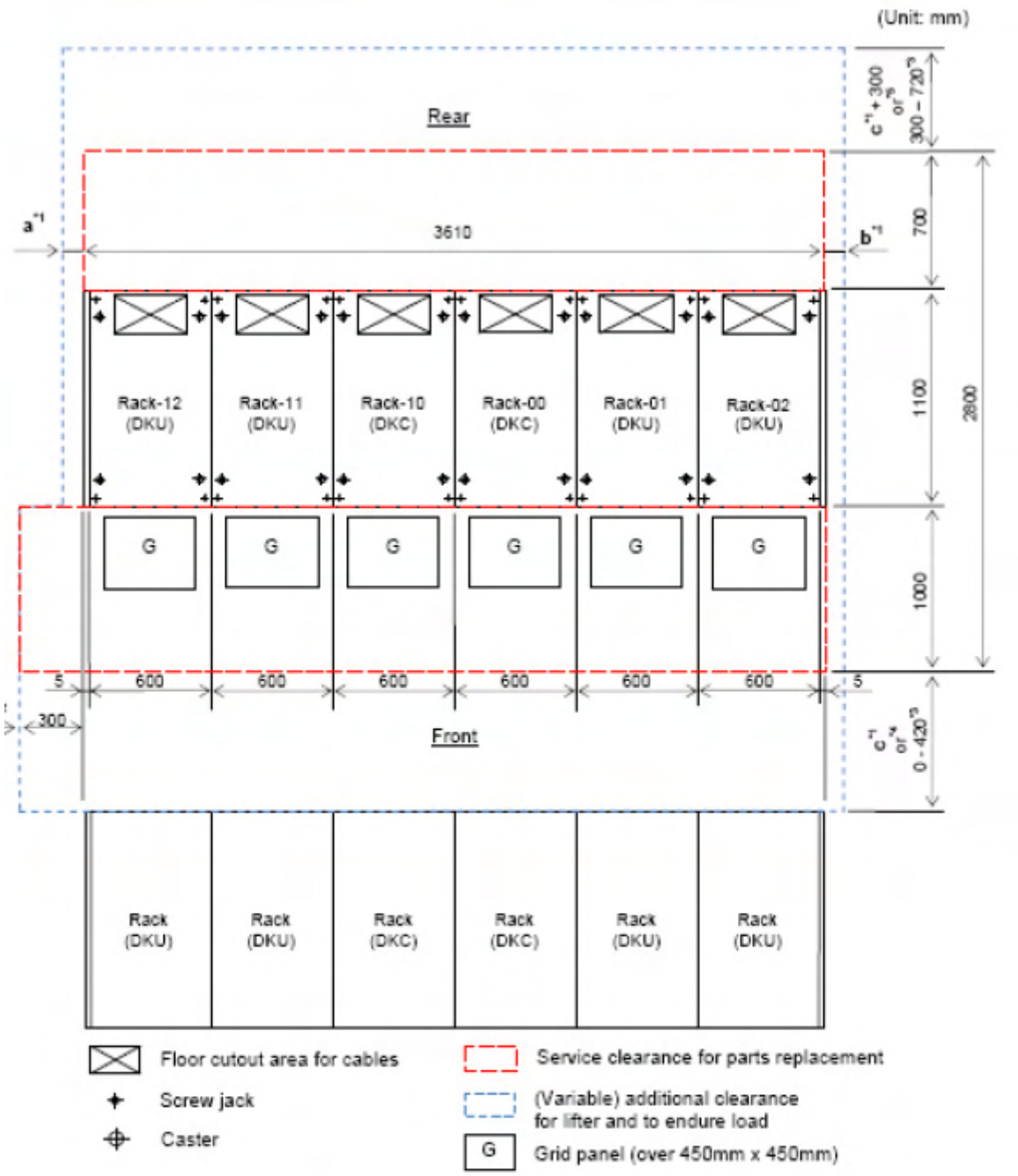

*1: Clearance (a+b) is based on the floor load rating and the clearance (c).
Floor load rating and required clearances are shown in the table following this figure.
*2: Clearance (d) must be over 300mm to open the front door.
In case that clearance (d) is less than clearance (a), give priority to clearance (a).
*3: If the Drive Chassis is installed at computer room, additional clearance depends upon the lifter model to be used.
*4: Adopt larger value from C or 0-420.
*5: Adopt larger value from C+300 or 300-720.

Figure 3-17 Service clearances, six-rack system

Table 3-19 Floor load rating and required clearances for six-rack configuration

Floor Load Rating (kg/m2)	Required Clearance (a+b) m				
	Clearance (c) m				
	C=0	C=0.2	C=0.4	C=0.6	C=0.6
500	0.1	0	0	0	0
450	0.7	0.4	0.1	0	0
400	1.5	1.1	0.8	0.5	0 .1
350	2.6	2.2	1.8	1.4	0.9
300	4.4	3.8	3.3	2.9	2.1

Notes:

1. Actual clearances for installation should be determined after consulting with construction specialist responsible for installation building, as they could vary depending on the size/layout of the system and building conditions.
2. When various configurations of storage systems are arranged in a row, clearance values based on the largest storage system configuration should be used.
3. From the viewpoint of maintenance operations, it is suggested that Clearance (c) be made as large as possible.

Operational requirements

The operational requirements for the VSP include:

- **LAN for Storage Navigator**

Storage Navigator communicates with the VSP storage system over a LAN to obtain system configuration and status information and send user commands to the storage system. Storage Navigator serves as the integrated interface for all resource manager components.

- **Cable length for front-end directors**

Table 3-20 Maximum cable length (shortwave) on page 3-32 lists the cable length requirements for the FEDs in the VSP storage system.

Table 3-20 Maximum cable length (shortwave)

DataTransfer Rate	OM1(62.5/125ƒÝm multi-mode fiber)	OM2(50/125ƒÝm multi-mode fiber)	OM3(50/125ƒÝm laser optimizedmulti-mode fiber)
MB/s	feet / meters	feet / meters	feet / meters
100	984.3 / 300	1640.4 / 500	1640.4 / 500
200	492.1 / 150	984.3 / 300	1640.4 / 500
400	229.7 / 70	492.1 / 150	1246.7 / 380
800	68.9 / 21	164 / 50	492.1 / 150

- **External data storage**

If you plan to attach external storage to the VSP storage system, be sure to include the appropriate power and space requirements in your planning.

Glossary

This glossary defines the special terms used in this document.

A

ATA

Advanced Technology Attachment. This is a disk drive implementation that integrates the controller on the disk drive.

array

See disk array.

B

back-end director (BED)

The hardware component that controls the transfer of data between the drives and cache. A BED feature consists of a pair of boards. A BED is also referred to as a disk adapter (DKA).

BED

See *back-end director*.

BS

basic (power) supply

C

CCI

Command Control Interface

CHA

See channel adapter.

controller chassis

The hardware assembly that contains the logic and processing components of the Virtual Storage Platform storage system, including the front-end directors, virtual storage directors, cache memory, switches, and back-end directors. The Virtual Storage Platform storage system can be configured with one or two control chassis.

D

disk array

Disk array, or just array, is a complete storage system, including the control and logic devices, storage devices (HDD, SSD), connecting cables, and racks.

drive chassis

The hardware component of the Virtual Storage Platform that houses disk drives and/or flash drives. The Virtual Storage Platform can be configured with up to 16 drive chassis.

dynamic provisioning

An approach to managing storage. Instead of "reserving" a fixed amount of storage, it removes capacity from the available pool when data is actually written to disk. Also called thin provisioning.

F

FED

See front-end director.

FICON

Fibre Connectivity

flash drive

A data drive that is a solid-state memory device instead of a rotating hard disk.

free capacity

The amount of storage space (in bytes) that is available for use by the host systems.

front-end director (FED)

The hardware component that processes channel commands from hosts and manages host access to cache.

G

GLPR

global logical partition

J

JRE

Java Runtime Environment

JVM

Java Virtual Machine

K

kVA

kilovolt-ampere

L

LDEV

logical device

license key

A specific set of characters that unlocks an application and allows it to be used.

logical device (LDEV)

An individual logical data volume (on multiple drives in a RAID configuration) in the storage system. An LDEV may or may not contain any data and may or may not be defined to any hosts. Each LDEV has a unique identifier or "address" within the storage system composed of the logical disk controller (LDKC) number, control unit (CU) number, and LDEV number. The LDEV IDs within a storage system do not change.An LDEV formatted for use by mainframe hosts is called a logical volume image (LVI). An LDEV formatted for use by open-system hosts is called a logical unit (LU).

logical volume

See *volume*.

logical volume image (LVI)

A logical volume that is configured for use by mainframe hosts (for example, 3390-9).

LUN

logical unit number

LUSE

LUN Size Expansion

LVI

See *logical volume image (LVI)*.

M

mirror

In Universal Replicator, each pair relationship in and between journal groups is called a "mirror". Each pair is assigned a mirror ID when it is created. The mirror ID identifies individual pair relationships between journal groups.

modify mode

The mode of operation of Storage Navigator that allows changes to the storage system configuration. See also *view mode*.

P

pair

Two logical volumes in a replication relationship in which one volume contains original data to be copied and the other volume contains the copy of the original data. The copy operations can be synchronous or asynchronous, and the pair volumes can be located in the same storage system (in-system replication) or in different storage systems (remote replication).

pair status

Indicates the condition of a copy pair. A pair must have a specific status for specific operations. When an operation completes, the status of the pair changes to the new status.

PDB

power distribution box

PDP

power distribution panel

PDU

power distribution unit

pool

A set of volumes that are reserved for storing Copy-on-Write Snapshot data or Dynamic Provisioning write data.

R

RAID

redundant array of independent disks. A disk array in which part of the physical storage space is used to store user data and parity information, and another part is used to store a duplicate set of user data and parity information. This redundant configuration prevents data loss in case a disk drive within the RAID configuration fails, and enables regeneration of user data in the event that one of the array's member disks or the access path to it fails.

RAID group

A set of RAID disks that have the same capacity and are treated as one group for data storage and recovery. A RAID group contains both user data and parity information. This allows user data to be accessed in the event that one or more of the drives within the RAID group are not available. The RAID level of a RAID group determines the number of data drives and parity drives and how the data is "striped" across the drives. For RAID1, user data is duplicated within the RAID group, so there is no parity data for RAID1 RAID groups.

A RAID group can also be called an array group or a parity group.

RAID level

The type of RAID implementation. RAID levels include RAID0, RAID1, RAID2, RAID3, RAID4, RAID5 and RAID6.

S

SAS

serial-attached SCSI

SATA

serial Advanced Technology Attachment

service information message (SIM)

SIMs are generated by a VSP storage system when it detects an error or service requirement. SIMs are reported to hosts and displayed on Storage Navigator.

SFM

See smart flash module

SIM

See *service information message*

smart flash module

The smart flash module (SFM) is a Hitachi custom-designed and manufactured enterprise class solid state storage module. It uses a high performance, custom ASIC flash controller and standard flash memory chips in an implementation that exceeds the performance of expensive SLC SSDs, but costs less than less expensive MLC SSDs. .

SOM

See *system option mode*

system disk

The volume from which an open-systems host boots.

system option mode (SOM)

Additional operational parameters for the RAID storage systems that enable the storage system to be tailored to unique customer operating requirements. SOMs are set on the service processor.

T

tiered storage

A layered structure of performance levels, or tiers, that matches data access requirements with the appropriate performance tiers. The tiers are:

Tier 1: Static content. Tier 1 is fully supported computing expected to be production quality.

Tier 2: Application logic. Tier 2 platforms are not supported by the security officer and release engineering teams. Tier 2 systems are targeted for Tier 1 support, but are still under development.

Tier 3: Database. Tier 3 platforms are architectures for which hardware is not or will not be available or that are considered legacy systems unlikely to see broad future use.

Tier 4 systems are not supported.

V

virtual storage director

The virtual storage directors of the Virtual Storage Platform storage system control the front-end directors and manage front-end access to cache memory.

volume

A logical device (LDEV), or a set of concatenated LDEVs in the case of LUSE, that has been defined to one or more hosts as a single data storage unit. A mainframe volume is called a logical volume image (LVI), and an open-systems volume is called a logical unit. (LU).

Index

Symbols

checklist 1-2
clearances, equipment 3-2
equipment clearances 3-2
equipment weight 3-2
guidelines
  access by authorized personnel 2-2
  cabling 2-2
  earthquake safety 2-2
  electrical safety 2-3
  equipment modifications 2-2
  fire protection 2-2
  hazards 2-2
  loose clothing 2-2
  moving equipment 2-3
  operating in storms 2-2
  power cables 2-3
  safety glasses 2-2
  walkways and floors 2-2
  warning and safety labels 2-2
  work safety 2-2
requirements 3-4
  cable length 3-32
  circuit breakers 3-7
  data center 3-3
  delivery 1-3
  facilities 1-4
  general 2-2
  grounding 3-6
  installation 1-2, 3-1
  LAN 3-32
  operational 1-4, 3-32
  plugs 3-7
  power 1-4
  power connection 3-6
  safety 1-2, 1-3, 2-1
  service clearance 3-14
  site 3-2
  storage 1-4, 3-3
responsibilities
  support team 1-2
respopnsibilities
  user 1-2
specifications 3-4
  electrical 3-5
  environmental 3-13
  load rating 3-14
  mechanical 3-4

Hitachi Data Systems

Corporate Headquarters
2845 Lafayette Street
Santa Clara, California 95050-2639
U.S.A.
www.hds.com

Regional Contact Information

Americas
+1 408 970 1000
info@hds.com

Europe, Middle East, and Africa
+44 (0)1753 618000
info.emea@hds.com

Asia Pacific
+852 3189 7900
hds.marketing.apac@hds.com

Hitachi Data Systems

MK-90RD7041-09