HITACHI
Inspire the Next

Command Control Interface

01-40-03/xx or later

Installation and Configuration Guide

This document describes and provides instructions for installing Command Control Interface (CCI) software for the Hitachi RAID storage systems, including upgrading and removing CCI.

Hitachi Virtual Storage Platform G series and F series
Hitachi Virtual Storage Platform
Hitachi Unified Storage VM
Hitachi Universal Platform V/VM

MK-90RD7008-20
October 2017

© 2010, 2017 Hitachi Vantara Corporation. All rights reserved.

No part of this publication may be reproduced or transmitted in any form or by any means, electronic or mechanical, including photocopying and recording, or stored in a database or retrieval system for commercial purposes without the express written permission of Hitachi, Ltd., or Hitachi Vantara Corporation (collectively, "Hitachi"). Licensee may make copies of the Materials provided that any such copy is: (i) created as an essential step in utilization of the Software as licensed and is used in no other manner; or (ii) used for archival purposes. Licensee may not make any other copies of the Materials. "Materials" mean text, data, photographs, graphics, audio, video and documents.

Hitachi reserves the right to make changes to this Material at any time without notice and assumes no responsibility for its use. The Materials contain the most current information available at the time of publication.

Some of the features described in the Materials might not be currently available. Refer to the most recent product announcement for information about feature and product availability, or contact Hitachi Vantara Corporation at https://support.HitachiVantara.com/en_us/contact-us.html.

Notice: Hitachi products and services can be ordered only under the terms and conditions of the applicable Hitachi agreements. The use of Hitachi products is governed by the terms of your agreements with Hitachi Vantara Corporation.

By using this software, you agree that you are responsible for:

1) Acquiring the relevant consents as may be required under local privacy laws or otherwise from authorized employees and other individuals to access relevant data; and

2) Verifying that data continues to be held, retrieved, deleted, or otherwise processed in accordance with relevant laws.

Notice on Export Controls. The technical data and technology inherent in this Document may be subject to U.S. export control laws, including the U.S. Export Administration Act and its associated regulations, and may be subject to export or import regulations in other countries. Reader agrees to comply strictly with all such regulations and acknowledges that Reader has the responsibility to obtain licenses to export, re-export, or import the Document and any Compliant Products.

EXPORT CONTROLS - Licensee will comply fully with all applicable export laws and regulations of the United States and other countries, and Licensee shall not export, or allow the export or re-export of, the Software, API, or Materials in violation of any such laws or regulations. By downloading or using the Software, API, or Materials, Licensee agrees to the foregoing and represents and warrants that Licensee is not located in, under the control of, or a national or resident of any embargoed or restricted country.

Hitachi is a registered trademark of Hitachi, Ltd., in the United States and other countries.

AIX, AS/400e, DB2, Domino, DS6000, DS8000, Enterprise Storage Server, eServer, FICON, FlashCopy, IBM, Lotus, MVS, OS/390, PowerPC, RS6000, S/390, System z9, System z10, Tivoli, z/OS, z9, z10, z13, z/VM, and z/VSE are registered trademarks or trademarks of International Business Machines Corporation.

Active Directory, ActiveX, Bing, Excel, Hyper-V, Internet Explorer, the Internet Explorer logo, Microsoft, the Microsoft Corporate Logo, MS-DOS, Outlook, PowerPoint, SharePoint, Silverlight, SmartScreen, SQL Server, Visual Basic, Visual C++, Visual Studio, Windows, the Windows logo, Windows Azure, Windows PowerShell, Windows Server, the Windows start button, and Windows Vista are registered trademarks or trademarks of Microsoft Corporation. Microsoft product screen shots are reprinted with permission from Microsoft Corporation.

All other trademarks, service marks, and company names in this document or web site are properties of their respective owners.

Contents

Preface.....v
Intended audience..... vi
Product version..... vi
Release notes..... vi
Changes in this revision..... vi
Referenced documents..... vi
Document conventions.....vii
Convention for storage capacity values.....viii
Accessing product documentation.....ix
Getting help.....ix
Comments.....x

1 Installation requirements.....1-1
System requirements..... 1-2
CCI operating environment.....1-4
Platforms that use CCI..... 1-4
Applicable platforms on VM..... 1-6
Supported platforms for IPv6.....1-7
Policies on supporting CCI.....1-8
Requirements and restrictions for z/Linux..... 1-8
Requirements and restrictions for VM..... 1-10
Restrictions for VMware ESX Server.....1-11
Restrictions on AIX VIO.....1-12
Restrictions on Windows Hyper-V (Windows 2012/2008)..... 1-13
Restrictions on Oracle VM.....1-15
About platforms supporting IPv6.....1-15
Library and system call for IPv6..... 1-15
Environment variable..... 1-16
Porting notice for OpenVMS.....1-17
Requirements and restrictions for OpenVMS..... 1-17
Known issues 1-23
Startup procedures using detached process on DCL.....1-24
Command examples in DCL..... 1-26
Start-up procedures in bash.....1-29
Using CCI with Hitachi and other storage systems..... 1-31

2 Installing and configuring CCI....2-1
Installing the CCI hardware....2-2
Installing the CCI software....2-3
UNIX installation....2-3
Changing the CCI user (UNIX systems)....2-4
Windows installation....2-6
Changing the CCI user (Windows systems)....2-6
OpenVMS installation....2-8
Installing CCI on a PC with the VSP Gx00 models storage management software....2-9
In-band and out-of-band operations....2-9
Setting up UDP ports....2-13
Setting the command device....2-13
Setting the command device and virtual command device....2-15
About alternate command devices....2-16
Creating/editing the configuration definition file....2-17

3 Upgrading CCI....3-1
Upgrading CCI in a UNIX environment....3-2
Upgrading CCI in a Windows environment....3-2
Upgrading CCI in an OpenVMS environment....3-3
Upgrading CCI on a PC with the VSP Gx00 models storage management software....3-4

4 Removing CCI....4-1
Removing CCI in a UNIX environment....4-2
Removing CCI in a Windows environment....4-3
Removing CCI in an OpenVMS environment....4-3
Removing CCI on a PC with the VSP Gx00 models storage management software....4-3
Removing the CCI components....4-4

5 Troubleshooting....5-1
Troubleshooting....5-2

A Fibre-to-SCSI address conversion....A-1
Fibre/FCoE-to-SCSI address conversion....A-2
LUN configurations on the RAID storage systems....A-4
Fibre address conversion tables....A-5

B Sample configuration definition files....B-1
Sample configuration definition files....B-2
Examples of CCI configurations....B-19
Correspondence of the configuration definition file for cascading volume and mirror descriptors....B-43
Cascade function and configuration files....B-44
ShadowImage....B-45
Cascading connections for TrueCopy and ShadowImage....B-47

Index

Preface

This document describes and provides instructions for installing Command Control Interface (CCI) software for the Hitachi RAID storage systems, including upgrading and removing CCI.

Please read this document carefully to understand how to use this product, and maintain a copy for reference purposes.

- ☐ Intended audience
- ☐ Product version
- ☐ Release notes
- ☐ Changes in this revision
- ☐ Referenced documents
- ☐ Document conventions
- ☐ Convention for storage capacity values
- ☐ Accessing product documentation
- ☐ Getting help
- ☐ Comments

Intended audience

This document is intended for system administrators, Hitachi Data Systems representatives, and authorized service providers who install, configure, and use the Command Control Interface software for the Hitachi RAID storage systems.

Readers of this document should be familiar with the following:

- Data processing and RAID storage systems and their basic functions.
- The Hitachi RAID storage system and the manual for the storage system (for example, *Hitachi Virtual Storage Platform G1000 Hardware User Guide*, *Hitachi Virtual Storage Platform User and Reference Guide*).
- The management software for the storage system (for example, Hitachi Command Suite, Hitachi Device Manager - Storage Navigator, Storage Navigator) and the applicable user manuals (for example, *Hitachi Command Suite User Guide*, *System Administrator Guide*, *Hitachi Storage Navigator User Guide* for VSP, HUS VM, USP V/VM).
- The host systems attached to the Hitachi RAID storage systems.

Product version

This document revision applies to Command Control Interface software version 01-40-03/*xx* or later.

Release notes

The CCI Release Notes are available on Hitachi Data Systems Support Connect: https://support.hds.com/en_us/documents.html. Read the release notes before installing and using this product. They may contain requirements or restrictions that are not fully described in this document or updates or corrections to this document.

Changes in this revision

- Updated the information about installing CCI and changing the user (Installing the CCI software on page 2-3, Changing the CCI user (UNIX systems) on page 2-4, Changing the CCI user (Windows systems) on page 2-6).
- Added a table of supported platforms for VSP and HUS VM (Platforms that use CCI on page 1-4).

Referenced documents

Command Control Interface documents:

- *Command Control Interface Command Reference*, MK-90RD7009

- *Command Control Interface User and Reference Guide*, MK-90RD7010

Storage system documents:

- *Hardware Guide* or *User and Reference Guide* for the storage system
- *Open-Systems Host Attachment Guide*, MK-90RD7037
- *Hitachi Command Suite User Guide*, MK-90HC172
- *System Administrator Guide* or *Storage Navigator User Guide* for the storage system
- *Storage Navigator Messages* for the storage system
- Provisioning/LUN Manager/Virtual LUN User Guide for the storage system

Document conventions

This document uses the following terminology conventions:

Convention	Description
Hitachi RAID storage system, storage system	Refers to all supported storage system models, unless otherwise noted.
Hitachi Virtual Storage Platform G200, G400, G600, G800 (VSP G200, G400, G600, G800) VSP Gx00 models	Refers to all models of the Hitachi Virtual Storage Platform G200, G400, G600, G800 storage systems, unless otherwise noted.
Hitachi Virtual Storage Platform F400, F600, F800 (VSP F400, F600, F800) VSP Fx00 models	Refers to all models of the Hitachi Virtual Storage Platform F400, F600, F800 storage systems, unless otherwise noted.

This document uses the following typographic conventions:

Convention	Description
Bold	• Indicates text in a window, including window titles, menus, menu options, buttons, fields, and labels. Example: Click **OK**. • Indicates emphasized words in list items.
Italic	• Indicates a document title or emphasized words in text. • Indicates a variable, which is a placeholder for actual text provided by the user or for output by the system. Example: `pairdisplay -g` *`group`* (For exceptions to this convention for variables, see the entry for angle brackets.)
`Monospace`	Indicates text that is displayed on screen or entered by the user. Example: `pairdisplay - g oradb`

Convention	Description
< > (angle brackets)	Indicates variables in the following scenarios: • Variables are not clearly separated from the surrounding text or from other variables. Example: `Status-<report-name><file-version>.csv` • Variables in headings.
[ ] (square brackets)	Indicates optional values. Example: [a | b] indicates that you can choose a, b, or nothing.
{ } (braces)	Indicates required or expected values. Example: { a | b } indicates that you must choose either a or b.
| (vertical bar)	Indicates that you have a choice between two or more options or arguments. Examples: [a | b] indicates that you can choose a, b, or nothing. { a | b } indicates that you must choose either a or b.
↓*value*↓ floor floor(*value*)	Floor function (round down *value* to the next integer)
↑*value*↑ ceiling ceiling(*value*)	Ceiling function (round up *value* to the next integer)
_ (underlined text)	Default value

This document uses the following icons to draw attention to information:

Icon	Label	Description
	Note	Calls attention to important or additional information.
	Tip	Provides helpful information, guidelines, or suggestions for performing tasks more effectively.
	Important	Provides information that is essential to the completion of a task.
	Caution	Warns the user of adverse conditions or consequences (for example, disruptive operations).
	WARNING	Warns the user of severe conditions or consequences (for example, destructive operations).

Convention for storage capacity values

Physical storage capacity values (for example, disk drive capacity) are calculated based on the following values:

Physical capacity unit	Value
1 KB	1,000 (10^3) bytes
1 MB	1,000 KB or $1{,}000^2$ bytes
1 GB	1,000 MB or $1{,}000^3$ bytes
1 TB	1,000 GB or $1{,}000^4$ bytes
1 PB	1,000 TB or $1{,}000^5$ bytes
1 EB	1,000 PB or $1{,}000^6$ bytes

Logical storage capacity values (for example, logical device capacity) are calculated based on the following values:

Logical capacity unit	Value
1 block	512 bytes
1 cylinder	Mainframe: 870 KB Open-systems: • OPEN-V: 960 KB • Others: 720 KB
1 KB	1,024 (2^{10}) bytes
1 MB	1,024 KB or $1{,}024^2$ bytes
1 GB	1,024 MB or $1{,}024^3$ bytes
1 TB	1,024 GB or $1{,}024^4$ bytes
1 PB	1,024 TB or $1{,}024^5$ bytes
1 EB	1,024 PB or $1{,}024^6$ bytes

Accessing product documentation

Product documentation is available on Hitachi Data Systems Support Connect: https://support.hds.com/en_us/documents.html. Check this site for the most current documentation, including important updates that may have been made after the release of the product.

Getting help

Hitachi Data Systems Support Connect is the destination for technical support of products and solutions sold by Hitachi Data Systems. To contact technical support, log on to Hitachi Data Systems Support Connect for contact information: https://support.hds.com/en_us/contact-us.html.

Hitachi Data Systems Community is a new global online community for HDS customers, partners, independent software vendors, employees, and

prospects. It is the destination to get answers, discover insights, and make connections. **Join the conversation today!** Go to community.hds.com, register, and complete your profile.

Comments

Please send us your comments on this document: doc.comments@hds.com. Include the document title and number, including the revision level (for example, -07), and refer to specific sections and paragraphs whenever possible. All comments become the property of Hitachi Data Systems Corporation.

Thank you!

1

Installation requirements

This chapter describes the installation requirements for the Command Control Interface (CCI) software.

- ☐ System requirements
- ☐ CCI operating environment
- ☐ Requirements and restrictions for z/Linux
- ☐ Requirements and restrictions for VM
- ☐ About platforms supporting IPv6
- ☐ Porting notice for OpenVMS
- ☐ Using CCI with Hitachi and other storage systems

System requirements

Table 1-1 System requirements on page 1-2 lists and describes the system requirements for Command Control Interface.

Table 1-1 System requirements

Item	Requirement
Command Control Interface software product	The CCI software is supplied on the media for the program product (for example, DVD-ROM). The CCI software files take up 2.5 MB of space. The log files can take up to 3 MB of space.
Hitachi RAID storage systems	The requirements for the RAID storage systems are: • **Microcode.** The availability of features and functions depends on the level of microcode installed on the storage system. • **Command device.** The CCI command device must be defined and accessed as a raw device (no file system, no mount operation). • **License keys.** The software products to be used (for example, Universal Replicator, Dynamic Tiering) must be enabled on the storage system. • **System option modes.** Before you begin operations, the system option modes (SOMs) must be set on the storage system by your Hitachi Data Systems representative. For details about the SOMs, see the *Hardware Guide* or *User and Reference Guide* for your storage system. **Note:** Check the appropriate manuals (for example, *Hitachi TrueCopy® for Mainframe User Guide*) for SOMs that are required or recommended for your operational environment. • **System requirements for Hitachi software products.** Make sure that your system meets the requirements for operation of the Hitachi software products. For example: TrueCopy, Universal Replicator, global-active device: Bi-directional swap must be enabled between the primary and secondary volumes. The port attributes (for example, initiator, target, RCU target) and the MCU-RCU paths must be defined. Copy-on-Write Snapshot: ShadowImage is a prerequisite for Copy-on-Write Snapshot. Thin Image: Dynamic Provisioning is a prerequisite for Thin Image. **Note:** Check the appropriate manuals (for example, *Hitachi Universal Replicator User Guide*) for the system requirements for your operational environment. For details about other storage systems, see Using CCI with Hitachi and other storage systems on page 1-31.
Host platforms	CCI operations are supported on the following host platforms: • AIX • HP-UX • Red Hat Enterprise Linux (RHEL) • Oracle Linux (OEL) • Solaris • SUSE Linux Enterprise Server (SLES) • Tru64 UNIX • Windows

Item	Requirement
	• z/Linux When a vendor discontinues support of a host software version, CCI that is released at or after that time will not support that version of the host software. For detailed support information (for example, OS versions), refer to the Hitachi Data Systems interoperability matrix at https://support.hds.com.
I/O interface	For details about I/O interface support (Fibre, SCSI, iSCSI), refer to the Hitachi Data Systems interoperability matrix at https://support.hds.com.
Host access	Root/administrator access to the host is required to perform host-based CCI operations.
Host memory	This product requires static memory and dynamic memory for executing the load module. • Static memory capacity: 600KB min. to 1200KB max. • Dynamic memory capacity: determined by the description of the configuration file. The minimum is: (Number of unit IDs × 200 KB) + (Number of LDEVs × 360B) + (Number of entries × 180B) ◦ Number of unit IDs: number of storage chassis ◦ Number of LDEVs: number of LDEVs (each instance) ◦ Number of entries: number of paired entries (pairs) Example for a 1:3 pair configuration: • Number of LDEVs in the primary instance = 1 • Number of entries (pairs) in the primary instance = 3 • Number of LDEVs in the secondary instance = 3 • Number of entries (pairs) in the secondary instance = 3
Host disk	• Capacity required for running CCI: 20 MB (varies depending on the platform) • Capacity of the log file that is created after CCI starts: 3000 KB (when there are no failures, including command execution errors)
IPv6, IPv4	The minimum OS platform versions for CCI/IPv6 support are: • HP-UX: HP-UX 11.23 (PA/IA) or later • Solaris: Solaris 9/Sparc or later, Solaris 10/x86/64 or later • AIX: AIX 5.3 or later • Windows: Windows 2008(LH) • Linux: Linux Kernel 2.4 (RH8.0) or later • Tru64: Tru64 v5.1A or later. Note that v5.1A does not support the **getaddrinfo()** function, so this must be specified by IP address directly. • OpenVMS: OpenVMS 8.3 or later **UDP ports:** Contact your network administrator for appropriate UDP port numbers to use in your network. The network administrator must enable these ports to allow traffic between CCI servers. For details about the setting up UDP ports, see Setting up UDP ports on page 2-13. For details about IPv6/IPv4 support, see Supported platforms for IPv6 on page 1-7.
Supported guest OS for VMware	CCI needs to use guest OS that is supported by CCI, and also VMware supported guest OS (for example, Windows Server 2008, Red Hat Linux, SuSE Linux). For

Item	Requirement
	details about guest OS support for VMware, refer to the Hitachi Data Systems interoperability matrix at https://support.hds.com.
Failover	CCI supports many industry-standard failover products. For details, refer to the Hitachi Data Systems interoperability matrix at https://support.hds.com or contact your Hitachi Data Systems representative.
Volume manager	CCI supports many industry-standard volume manager products. For details, refer to the Hitachi Data Systems interoperability matrix at https://support.hds.com or contact your Hitachi Data Systems representative.
High availability (HA) configurations	The system that runs and operates TrueCopy in an HA configuration must be a duplex system having a hot standby or mutual hot standby (mutual takeover) configuration. The remote copy system must be designed for remote backup among servers and configured so that servers cannot share the primary and secondary volumes at the same time. The HA configuration does not include fault-tolerant system configurations such as Oracle Parallel Server (OPS) in which nodes execute parallel accesses. However, two or more nodes can share the primary volumes of the shared OPS database, and must use the secondary volumes as exclusive backup volumes. Host servers that are combined when paired logical volumes are defined should run on operating systems of the same architecture. If not, one host might not be able to recognize a paired volume of another host, even though CCI runs properly.

CCI operating environment

This section describes the operating systems, failover software, and I/O interfaces that support CCI. Contact Hitachi Data Systems customer support for the latest information on CCI host software support.

To install CCI, log in with "root user" or "administrator" privileges. The login user type is determined by the operating system.

Platforms that use CCI

The following tables list the platforms that support CCI. CCI can run on the OS of the version listed in the table or later. Contact Hitachi Data Systems customer support for the latest information on the OS versions and connectivity with storage systems.

Table 1-2 Supported platforms for VSP G1000, VSP G1500, VSP F1500, VSP Gx00 models, and VSP Fx00 models

Vendor	Operating System[1]	Failover Software	Volume Manager	I/O Interface
Oracle	Solaris 9	First Watch	VxVM	Fibre
	Solaris 10, 11	–	–	Fibre
	Solaris 10 on x86	–	VxVM	Fibre
	Solaris 11 on x64	–	–	Fibre/iSCSI

Vendor	Operating System[1]	Failover Software	Volume Manager	I/O Interface
	OEL6.X (6.2 or later)	–	–	Fibre/iSCSI
HP	HP-UX 11.1x	MC/Service Guard	LVM, SLVM	Fibre
	HP-UX 11.2x/11.3x on IA64[2]	MC/Service Guard	LVM, SLVM	Fibre
	Tru64 UNIX 5.0	TruCluster	LSM	Fibre
IBM	AIX 5.3, 6.1, 7.1	HACMP	LVM	Fibre
	z/Linux (Suse 8)[4]	–	–	Fibre (FCP)
Microsoft	Windows Server 2008/2008(R2)/2012/2012(R2)	–	LDM	Fibre
	Windows Server 2008(R2) on IA64	–	LDM	Fibre
	Windows Server 2008/2012 on x64	–	LDM	Fibre
	Windows Server 2008(R2)/ 2012(R2) on x64	–	LDM	Fibre/iSCSI
	Windows Server 2016 on x64	–	LDM	Fibre/iSCSI
Red Hat	RHEL AS/ES 3.0, 4.0, 5.0, 6, 7	–	–	Fibre[3]
	RHEL AS/ES 3.0 Update2, 4.0, 5.0 on x64 / IA64[2]	–	–	Fibre
	RHEL 6 on x64	–	–	Fibre/iSCSI
	RHEL 7 on x64	–	–	Fibre
Novell (SUSE)	SLES 10, 11	–	–	Fibre
	SLES 10 on x64	–	–	Fibre
	SLES 11 on x64	–	–	Fibre/iSCSI
	SLES 12 on x64	–	–	Fibre

1. Service packs (SP), update programs, or patch programs are not considered as requirements if they are not listed.
2. IA64: using IA-32EL on IA64 (except CCI for Linux/IA64)
3. See the troubleshooting chapter of the *Command Control Interface User and Reference Guide* .
4. For details see Requirements and restrictions for z/Linux on page 1-8.

Table 1-3 Supported platforms for VSP and HUS VM

Vendor	Operating System[1]	Failover Software	Volume Manager	I/O Interface
Oracle	Solaris 9	First Watch	VxVM	Fibre

Vendor	Operating System[1]	Failover Software	Volume Manager	I/O Interface
	Solaris 10 on x86	–	VxVM	Fibre
	OEL6.X	–	–	Fibre
HP	HP-UX 11.1x	MC/Service Guard	LVM, SLVM	Fibre
	HP-UX 11.2x/11.3x on IA64[2]	MC/Service Guard	LVM, SLVM	Fibre
	Tru64 UNIX 5.0	TruCluster	LSM	Fibre
IBM	AIX 5.3	HACMP	LVM	Fibre
	z/Linux (Suse 8)[4]	–	–	Fibre (FCP)
Microsoft	Windows 2008	MSCS	LDM	Fibre
	Windows 2008(R2) on IA64[2]	MSCS	LDM	Fibre
	Windows Server 2008/2012/2012(R2) on EM64T	MSCS	LDM	Fibre
	Windows Server 2016 on x64	–	LDM	Fibre
Red Hat	RHEL AS/ES 3.0, 4.0, 5.0	–	–	Fibre[3]
	RHEL AS/ES 3.0 Update2, 4.0, 5.0 on EM64T / IA64[2]	–	–	Fibre
Novell (SUSE)	SLES 10	–	–	Fibre

1. Service packs (SP), update programs, or patch programs are not considered as requirements if they are not listed.
2. IA64: using IA-32EL on IA64 (except CCI for Linux/IA64)
3. See the troubleshooting chapter of the *Command Control Interface User and Reference Guide* .
4. For details see Requirements and restrictions for z/Linux on page 1-8.

Applicable platforms on VM

The following table lists the applicable platforms for CCI on VM. CCI can run on the guest OS of the version listed in the table or later. Contact Hitachi Data Systems customer support for the latest information on the OS versions and connectivity with storage systems.

Table 1-4 Platforms on VM

VM vendor[1]	Layer	Guest OS[2, 3]	Volume mapping	I/O interface
VMware ESX Server 2.5.1 or later (Linux Kernel 2.4.9)[4]	Guest	Windows Server 2008	RDM[5]	Fibre
		RHEL5.x/6.x SLES10 SP2	RDM[5]	Fibre

VM vendor[1]	Layer	Guest OS[2, 3]	Volume mapping	I/O interface
		Solaris 10 u3 (x86)	RDM[5]	Fibre
VMware ESXi 5.5	Guest	Windows Server 2008(R2)	RDM[5]	Fibre/iSCSI
Windows Server 2008/2012 Hyper-V [6]	Child	Windows Server 2008	Path-thru	Fibre
		SLES10 SP2	Path-thru	Fibre
Hitachi	Virtage (58-12)	Windows Server 2008(R2)	Use LPAR	Fibre
		RHEL5.4		
Oracle VM 3.1 or later (Oracle VM Server for SPARC)	Guest	Solaris 11.1	See Restrictions on Oracle VM on page 1-15	See Restrictions on Oracle VM on page 1-15
HPVM 6.3 or later	Guest	HP-UX 11.3	Mapping by NPIV	Fibre
IBM VIOS 2.2.0.0	VIOC	AIX 7.1 TL01	Mapping by NPIV	Fibre

1. VM must be versions listed in this table or later.
2. Service packs (SP), update programs, or patch programs are not considered as requirements if they are not listed.
3. Operations on the guest OS that is not supported by VM are not supported.
4. For VMware ESX Server restrictions, see Restrictions for VMware ESX Server on page 1-11.
5. RDM: Raw Device Mapping using Physical Compatibility Mode is used.
6. For Windows 2008/2012 Hyper-V restrictions, see Restrictions on Windows Hyper-V (Windows 2012/2008) on page 1-13.

Supported platforms for IPv6

The IPv6 functionality for CCI can be used on the OS versions listed in the following table or later. Contact Hitachi Data Systems customer support for the latest OS versions.

Vendor	OS[1]	IPv6[2]	IPv4 mapped to IPv6
Oracle	Solaris 9/10/11	Y	Y
	Solaris10/11 on x86	Y	Y
	OEL6.X	Y	Y
HP	HP-UX 11.23(PA/IA)	Y	Y
	Tru64 UNIX 5.1A[3]	Y	Y
IBM	AIX 5.3	Y	Y

Vendor	OS[1]	IPv6[2]	IPv4 mapped to IPv6
	z/Linux(Suse 8, Suse9) on Z990	Y	Y
Microsoft	Windows 2008(R2) on x86/ EM64T/IA64	Y	N
Red Hat	L AS/ES3.0, RHEL5.x/6.x	Y	Y

Legend:

- Y: Can be used
- N: Cannot be used

Notes:

1. Service packs (SP), update programs, or patch programs are not considered as requirements if they are not listed.
2. For details about IPv6 support, see About platforms supporting IPv6 on page 1-15.
3. Performed by typing the IP address directly.

Policies on supporting CCI

When a vendor discontinues support of a host software version, CCI that is released at or after that time will not support that version of the host software. For the latest OS versions supported by CCI, refer to the Hitachi Data Systems interoperability matrix at https://support.hds.com.

Requirements and restrictions for z/Linux

In the following example, z/Linux defines the open volumes that are connected to FCP as /dev/sd*. Also, the mainframe volumes (3390-xx) that are connected to FICON are defined as /dev/dasd*.

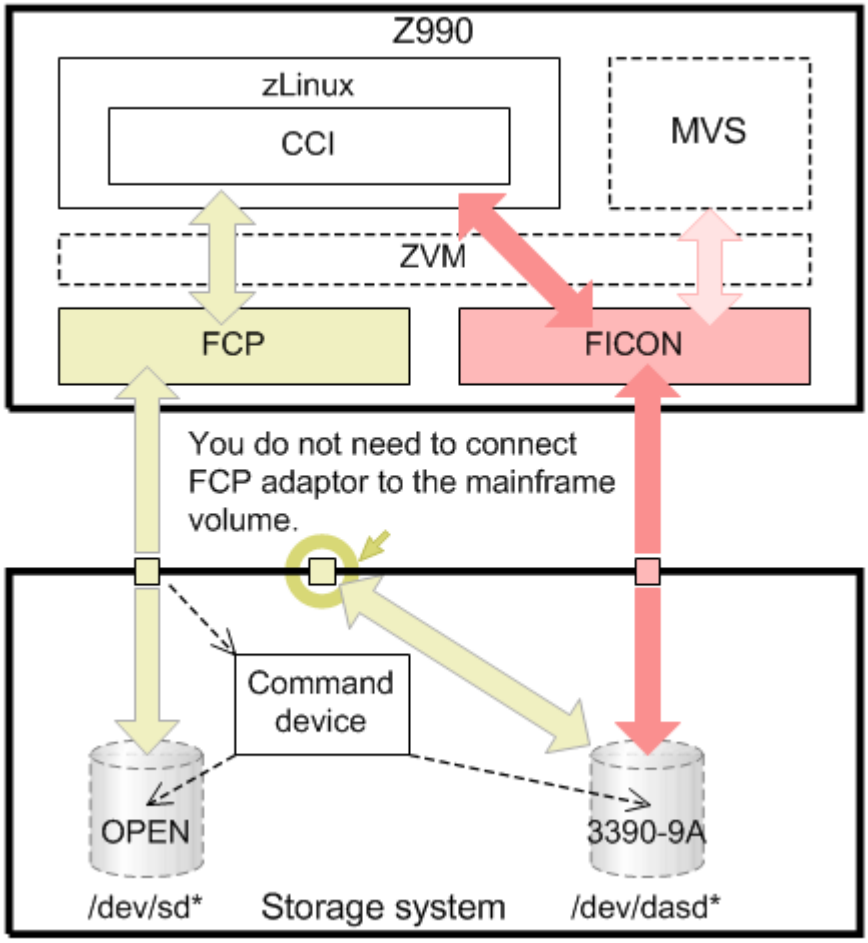

Figure 1-1 Example of a CCI Configuration on z/Linux

The restrictions for using CCI with z/Linux are:

- **SSB information.** SSB information might not be displayed correctly.
- **Command device.** CCI uses a SCSI Path-through driver to access the command device. As such, the command device must be connected through FCP adaptors.
- **Open Volumes via FCP.** Same operation as the other operating systems.
- **Mainframe (3390-9A) Volumes via FICON.** You cannot control the volumes (3390-9A) that are directly connected to FICON for ShadowImage pair operations. Also, mainframe volumes must be mapped to a CHF(FCP) port to access target volumes using a command device, as shown in Figure 1-1 Example of a CCI Configuration on z/Linux on page 1-9. The mainframe volume does not have to be connected to an FCP adaptor.

Note: ShadowImage supports only 3390-9A multiplatform volumes. TrueCopy and Universal Replicator do not support multiplatform volumes (including 3390-9A) via FICON®.

- **Volume discovery via FICON®.** When you discover volume information, the inqraid command uses SCSI inquiry. Mainframe volumes via FICON® do not support the SCSI interface. Because of this, information equivalent to SCSI inquiry is obtained via the mainframe interface (Read_device_characteristics or Read_configuration_data), and the available information is displayed similarly as the open volume. As a result, as shown below, information displayed by executing the inqraid command cannot be obtained. Only the last five digits of the FICON volume's serial number, which is displayed by the inqraid command, are displayed.

```
sles8z:/HORCM/usr/bin# ls /dev/dasd* | ./inqraid
/dev/dasda -> [ST] Unknown Ser =     1920 LDEV =   4 [HTC     ]
[0704_3390_0A]
/dev/dasdaa -> [ST] Unknown Ser =   62724 LDEV =4120 [HTC     ]
[C018_3390_0A]
/dev/dasdab -> [ST] Unknown Ser =   62724 LDEV =4121 [HTC     ]
[C019_3390_0A]
sles8z:/HORCM/usr/bin# ls /dev/dasd* | ./inqraid -CLI
DEVICE_FILE     PORT    SERIAL  LDEV CTG  H/M/12  SSID R:Group
PRODUCT_ID
dasda           -         1920     4   -       -  00C0       -
0704_3390_0A
dasdaa          -        62724  4120   -       -  9810       -
C018_3390_0A
dasdab          -        62724  4121   -       -  9810       -
C019_3390_0A
```

The Inqraid command displays only five-digit number at the end of serial number of the FICON volume.

In the previous example, the Product_ID, C019_3390_0A, has the following associations:

- C019: Serial number
- 3390: System type
- 0A: System model

The following commands cannot be used because there is no PORT information:

- `raidscan -pd <raw_device>`
- `raidar -pd <raw_device>`
- `raidvchkscan -pd <raw_device>`
- `raidscan -find`
- `raidscan -find conf`
- `mkconf`

Requirements and restrictions for VM

- Restrictions for VMware ESX Server on page 1-11
- Restrictions on AIX VIO on page 1-12

- Restrictions on Windows Hyper-V (Windows 2012/2008) on page 1-13
- Restrictions on Oracle VM on page 1-15

Restrictions for VMware ESX Server

Whether CCI (RM) runs or not depends on the support of guest OS by VMware. In addition, the guest OS depends on VMware support of virtual H/W (HBA). Therefore, the following guest OS and restrictions must be followed when using CCI on VMware.

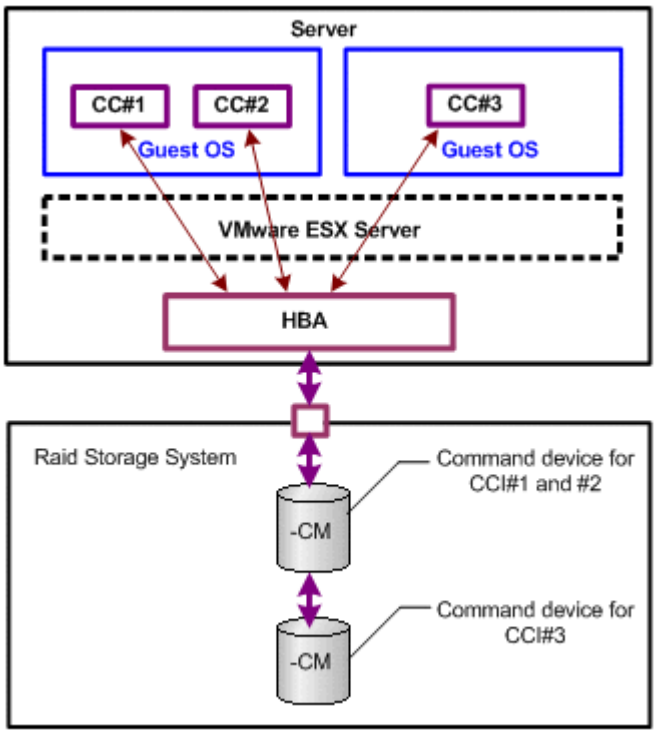

Figure 1-2 CCI Configuration on Guest OS/VMware

The restrictions for using CCI with VMware are:

1. **Guest OS.** CCI needs to use guest OS that is supported by CCI, and also VMware supported guest OS (for example, Windows, Red Hat Linux). For specific support information, refer to the Hitachi Data Systems interoperability matrix at https://support.hds.com.
2. **Command device.** CCI uses SCSI path-through driver to access the command device. Therefore, the command device must be mapped as **Raw Device Mapping** using Physical Compatibility Mode. At least one command device must be assigned for each guest OS.

   CCI (RM) instance numbers among different guest OS must be different, even if the command device is assigned for each guest OS, because the command device cannot distinguish a difference among guest OS due to the same WWN as VMHBA.
3. **About invisible Lun.** Assigned Lun for the guest OS must be visible from SCSI Inquiry when VMware (host OS) is started. For example, the S-VOL on VSS is used as Read Only and Hidden, and this S-VOL is hidden from

SCSI Inquiry. If VMware (host OS) is started on this volume state, the host OS will hang.

4. **Lun sharing between Guest and Host OS.** It is not supported to share a command device or a normal Lun between guest OS and host OS.
5. **About running on SVC.** The ESX Server 3.0 SVC (service console) is a limited distribution of Linux based on Red Hat Enterprise Linux 3, Update 6 (RHEL 3 U6). The service console provides an execution environment to monitor and administer the entire ESX Server host. The CCI user can run CCI by installing "CCI for Linux" on SVC. The volume mapping (/dev/sd) on SVC is a physical connection without converting SCSI Inquiry, so CCI will perform like running on Linux regardless of guest OS. However, VMware protects the service console with a firewall. According to current documentation, the firewall allows only PORT# 902, 80, 443, 22(SSH) and ICMP(ping), DHCP, DNS as defaults, so the CCI user must enable a PORT for CCI (HORCM) using the iptables command.

Restrictions on AIX VIO

Whether CCI can function completely or not depends on how VIO client/ server supports virtual HBA (vscsi), and there are some restrictions in the case of volume discovery. The following figure shows CCI configuration on an AIX VIO client.

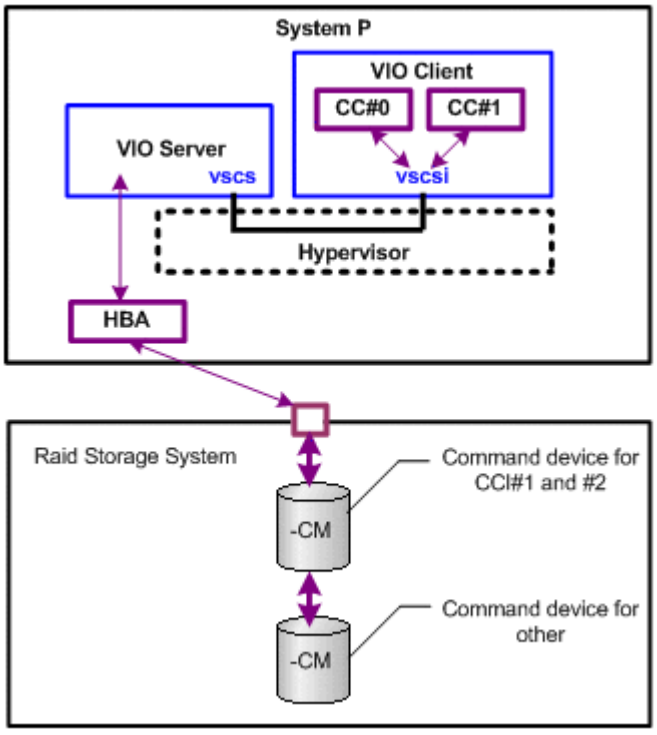

Figure 1-3 CCI Configuration on VIO Client

The restrictions for using CCI on AIX VIO are:

1. **Command device.** CCI uses the SCSI Path-through driver for accessing the command device. Therefore, the command device must be mapped as

RAW device of Physical Mapping Mode. At least one command device must be assigned for each VIO Client. The CCI instance numbers among different VIO Clients must be different, even if the command is assigned for each VIO Client, because the command device cannot distinguish between VIO Clients due to use of the same WWN via vscsi.

2. **LUN sharing between VIO Server and VIO Clients.** It is not possible to share a command device between VIO Server and VIO Clients, and a normal Lun also cannot be shared between VIO Server and VIO Clients.
3. **Volume discovery via vscsi on VIO Client.** The inqraid command discovers the volume information by using SCSI inquiry, but VIO Client cannot report the real SCSI inquiry (Page0 and Page83) as shown below.

   Example for inqraid command:

   ```
   lsdev -Cc disk | /HORCM/usr/bin/inqraid
   hdisk0 -> NOT supported INQ.        [AIX   ] [VDASD        ]
   hdisk1 -> NOT supported INQ.        [AIX   ] [VDASD        ]
   hdisk2 -> NOT supported INQ.        [AIX   ] [VDASD        ]
   :
   :
   hdisk19 -> NOT supported INQ.       [AIX   ] [VDASD        ]
   ```

   The following commands discover the volumes by issuing SCSI inquiry. These commands cannot be used, because there is no port/LDEV for RAID information.

   `raidscan -pd <device>, raidar -pd <device>, raidvchkscan -pd <device>`

   `raidscan -find [conf] , mkconf.sh, inqraid`

   `pairxxx -d[g] <device>, raidvchkdsp -d[g] <device>, raidvchkset -d[g] <device>`

   `\\.\CMD-Serial#-LDEV#-Port#:/dev/rhdisk on horcm.conf`

   Therefore, you need to know the volume mapping information (/dev/rhdisk) on the VIO Client by referring to the physical volume mapping through the VIO Server.
4. **About running on VIO Server.** The volume mapping (/dev/rhdisk) on a VIO Server is a physical connection without converting SCSI Inquiry, so CCI will perform as if running on AIX 5.3. However, IBM does not allow running applications in the VIO server. Since commands or scripts would have to be run outside the restricted shell, it might be necessary to get IBM approval to run in the VIO server. So you would have to change your scripts to run on a VIO server to issue the oem_setup_env command to access the non-restricted shell.

Restrictions on Windows Hyper-V (Windows 2012/2008)

Whether CCI can perform or not depends on the support of the guest OS by Windows Hyper-V, and then the guest OS depends on how Hyper-V supports front-end SCSI interfaces.

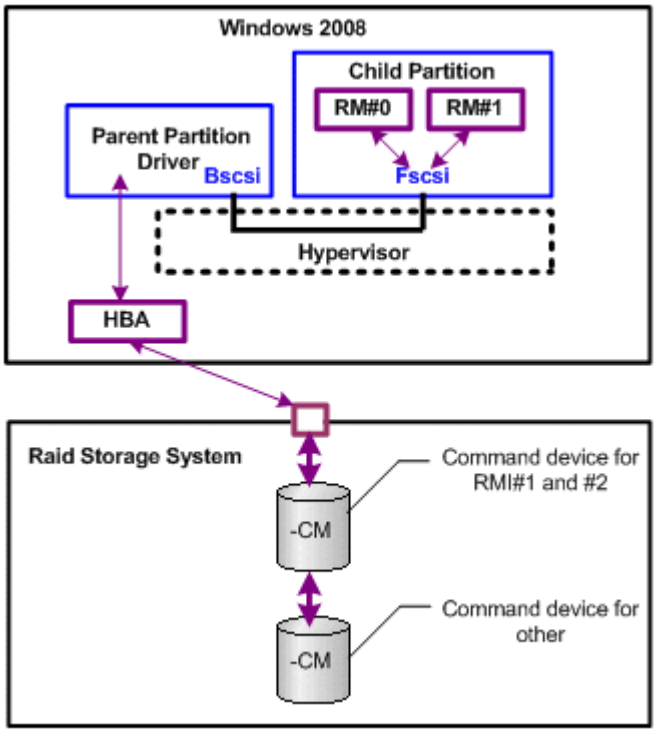

Figure 1-4 CCI Configuration on Hyper-V

The restrictions for using CCI on Hyper-V are as follows:

1. **Guest OS.** CCI needs to use the guest OS that is supported by CCI and also the Hyper-V supported guest OS (e.g., Windows Server 2008, SuSE Linux). For specific support information, refer to the Hitachi Data Systems interoperability matrix at https://support.hds.com.
2. **Command device.** CCI uses the SCSI path-through driver to access the command device. Therefore the command device must be mapped as RAW device of the path-through disk. At least one command device must be assigned for each guest OS (Child Partition).

   The RM instance number among different guest OSs must be used as a different instance number even if the command is assigned for each guest OS. This is because the command device cannot distinguish a difference among the guest OSs because the same WWN via Fscsi is used.
3. **Lun sharing between guest OS and console OS.** It is not possible to share a command device as well as a normal Lun between a guest OS and a console OS.
4. **Running CCI on Console OS.** The console OS (management OS) is a limited Windows, like Windows 2008/2012 Server Core, and the Windows standard driver is used. Also the console OS provides an execution environment to monitor and administer the entire Hyper-V host.

   Therefore, you can run CCI by installing "CCI for Windows NT" on the console OS. In that case, the CCI (RM) instance number between the console OS and the guest OS must be a different instance number, even if the command is assigned for each console and guest OS.

Restrictions on Oracle VM

Whether Command Control Interface runs or not, it depends on the guest OS supported by Oracle VM. The restrictions for using Command Control Interface with Oracle VM are:

- **Guest OS:** Command Control Interface must use the guest OS supported by Command Control Interface and the guest OS supported by Oracle VM.
- **Command device:** You cannot connect the command device of fibre channel directly to the guest OS. If you have to execute the command by an In-Band method, you must configure the system as shown in the figure below. In this configuration, Command Control Interface on the guest domain (RM#1 to RM#n) transfers the command to another Command Control Interface on the control domain (RM#0) by an Out-of-Band method. RM#0 executes the command by In-Band method, and then transfer the result to RM#1 to RM#n. RM#0 fulfills the same role as a virtual command device in the SVP/GUM/CCI server.

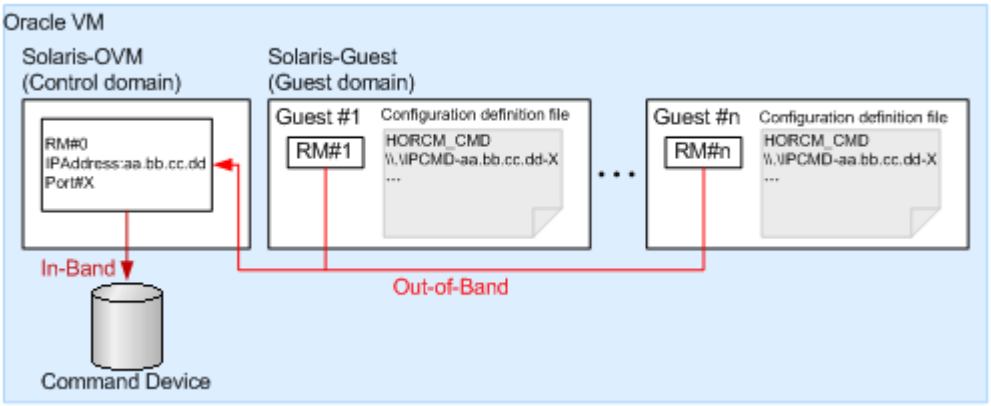

Figure 1-5 CCI configuration of Oracle VM

- Volumes on the guest OS must be mapped physically to the LDEVs on the disk machine.
- If you specify the system disk of OS as an object of copying, the OS might not start on the system disk of the copy destination.

About platforms supporting IPv6

Library and system call for IPv6

CCI uses the following functions of IPv6 library to get and convert from hostname to IPv6 address.

- IPv6 library to resolve hostname and IPv6 address:
  - getaddrinfo()
  - inet_pton()
  - inet_ntop()
- Socket System call to communicate using UDP/IPv6:

- socket(**AF_INET6**)
- bind(), sendmsg(), sendto(), rcvmsg(), recvfrom()…

If CCI links above function in the object(exe), a core dump might occur if an old platform (for example, Windows NT, HP-UX 10.20, Solaris 5) does not support it. So CCI links dynamically above functions by resolving the symbol after determining whether the shared library and function for IPv6 exists. It depends on supporting of the platform whether CCI can support IPv6 or not. If platform does not support IPv6 library, then CCI uses its own internal function corresponding to "inet_pton(),inet_ntop()"; in this case, IPv6 address is not allowed to describe hostname.

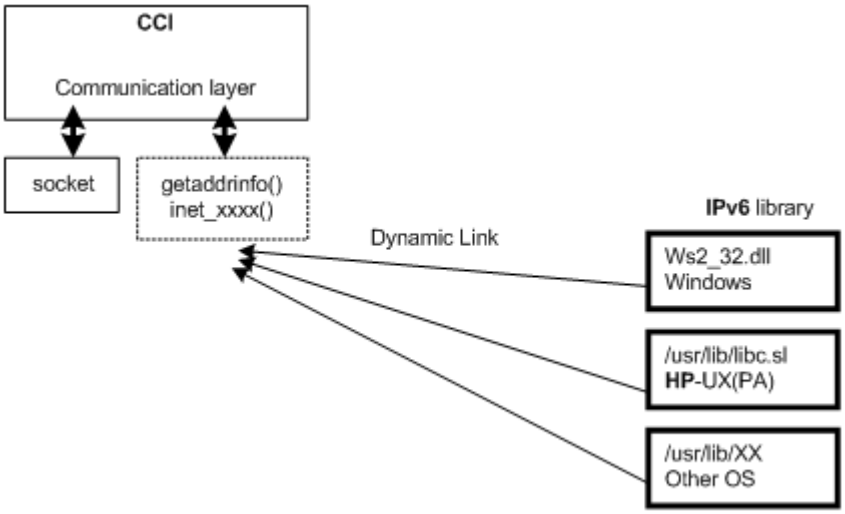

Figure 1-6 Library and System Call for IPv6

Environment variable

CCI loads and links the library for IPv6 by specifying a PATH as follows.

For Windows systems: **Ws2_32.dll**

For HP-UX (PA/IA) systems: **/usr/lib/libc.sl**

However, CCI might need to specify a different PATH to use the library for IPv6. After this consideration, CCI also supports the following environment variables for specifying a PATH:

- **$IPV6_DLLPATH** (valid for only HP-UX, Windows): This variable is used to change the default PATH for loading the Library for IPv6. For example:
  ```
  export IPV6_DLLPATH=/usr/lib/hpux32/lib.so
  horcmstart.sh 10
  ```
- **$IPV6_GET_ADDR:** This variable is used to change "**AI_PASSIVE**" value as default for specifying to the getaddrinfo() function for IPv6. For example:
  ```
  export IPV6_GET_ADDR=9
  horcmstart.sh 10
  ```

HORCM Start-Up Log

Support level of IPv6 feature depends on the platform and OS version. In certain OS platform environments, CCI cannot perform IPv6 communication completely, so CCI logs the results of whether the OS environment supports the IPv6 feature or not.

/HORCM/log/curlog/horcm_*HOST NAME*.log

```
**********************************************************
            -  HORCM STARTUP LOG - Fri Aug 31 19:09:24 2007
**********************************************************
19:09:24-cc2ec-02187- horcmgr started on Fri Aug 31 19:09:24 2007
:
:
19:09:25-3f3f7-02188- ***** starts Loading library for IPv6 ****
[ AF_INET6 = 26, AI_PASSIVE = 1 ]
19:09:25-47ca1-02188- dlsym() : Symbl = 'getaddrinfo' : dlsym:
symbol "getaddrinfo" not found in "/etc/horcmgr"
getaddrinfo() : Unlinked on itself
inet_pton()   : Linked on itself
inet_ntop()   : Linked on itself
19:09:25-5ab3e-02188- ****** finished Loading library *******
:
HORCM set to IPv6 ( INET6 value = 26)
:
```

Porting notice for OpenVMS

In the OpenVMS, the system call on UNIX is supported as the functions of CRTL (C Run Time Library) on the user process. Also the CRTL for OpenVMS does not support the POSIX and POSIX Shell fully as does UNIX. In addition, CCI uses the UNIX domain socket for IPC (Inter Process Communication), but OpenVMS does not support the AF_UNIX socket. As an alternate method, CCI accomplishes IPC between CCI and HORCM daemon by using the Mailbox driver on OpenVMS.

Therefore, CCI has the following restrictions in porting for OpenVMS.

Requirements and restrictions for OpenVMS

(1) Version of OpenVMS

CCI uses the CRTL and needs the following version supported on the ROOT directory for POSIX.

- OpenVMS Version 8.3 or later
- CRTL version must be installed prior to running CCI. (I64VMS C V7.3-18 was used in testing.)

(2) Defining the SYS$POSIX_ROOT

CCI requires that POSIX_ROOT is existing on the system, so you must define the POSIX_ROOT before running CCI. For example:

$ DEFINE/TRANSLATION=(CONCEALED,TERMINAL) SYS$POSIX_ROOT "**Device**:[**directory**]"

where **Device**:[**directory**] is defined as SYS$POSIX_ROOT

(3) IPC method using MailBox driver

As an alternate method of the UNIX domain socket for IPC (Inter Process Communication), CCI use the mailbox driver to enable the communication between CCI and HORCM.

Therefore, if CCI and HORCM are executing in different jobs (different terminal), then you must redefine **LNM$TEMPORARY_MAILBOX** in the **LNM$PROCESS_DIRECTORY** table as follows:

$ DEFINE/TABLE=LNM$PROCESS_DIRECTORY LNM$TEMPORARY_MAILBOX LNM$GROUP

(4) Start-up method for HORCM daemon

HORCM can start as the daemon process from a UNIX Shell. But in the case of 'vfork' of CRTL, if a parent process has exit() then a child process also ends at the same time. In other words, OpenVMS cannot make a daemon process from the POSIX program. Therefore, horcmstart.exe has been changed to wait until HORCM has been exiting by horcmshutdown.exe after start-up of the horcmgr. According to the rule for creating process in OpenVMS, to start-up the horcmstart.exe is to create the detached process or Batch JOB by using DCL command, as this method closely resembles the horcmd process on UNIX.

For example, using the Detached process:

If you want to have the HORCM daemon running in the background, you need to make the Detached LOGINOUT.EXE Process by using the 'RUN /DETACHED' command of the OpenVMS, and need to make the commands file for LOGINOUT.EXE.

The following are examples of "loginhorcm*.com" file given to SYS$INPUT for LOGINOUT.EXE, and are examples that "**VMS4$DKB100:[SYS0.SYSMGR.]**" was defined as SYS$POSIX_ROOT.

loginhorcm0.com

```
$ DEFINE/TRANSLATION=(CONCEALED,TERMINAL) SYS$POSIX_ROOT
"VMS4$DKB100:[SYS0.SYSMGR.]"
$ DEFINE DCL$PATH SYS$POSIX_ROOT:[horcm.usr.bin],SYS$POSIX_ROOT:
[horcm.etc]
$ DEFINE/TABLE=LNM$PROCESS_DIRECTORY LNM$TEMPORARY_MAILBOX LNM$GROUP
$ horcmstart 0
```

loginhorcm1.com

```
$ DEFINE/TRANSLATION=(CONCEALED,TERMINAL) SYS$POSIX_ROOT
"VMS4$DKB100:[SYS0.SYSMGR.]"
$ DEFINE DCL$PATH SYS$POSIX_ROOT:[horcm.usr.bin],SYS$POSIX_ROOT:
[horcm.etc]
$ DEFINE/TABLE=LNM$PROCESS_DIRECTORY LNM$TEMPORARY_MAILBOX LNM$GROUP
$ horcmstart 1
```

```
$ run /DETACHED SYS$SYSTEM:LOGINOUT.EXE /PROCESS_NAME=horcm0 -
_$ /INPUT=VMS4$DKB100:[SYS0.SYSMGR.][horcm]loginhorcm0.com -
_$ /OUTPUT=VMS4$DKB100:[SYS0.SYSMGR.][horcm]run0.out -
_$ /ERROR=VMS4$DKB100:[SYS0.SYSMGR.][horcm]run0.err
%RUN-S-PROC_ID, identification of created process is 00004160
$
$
$$ run /DETACHED SYS$SYSTEM:LOGINOUT.EXE /PROCESS_NAME=horcm1 -
_$ /INPUT=VMS4$DKB100:[SYS0.SYSMGR.][horcm]loginhorcm1.com -
_$ /OUTPUT=VMS4$DKB100:[SYS0.SYSMGR.][horcm]run1.out -
_$ /ERROR=VMS4$DKB100:[SYS0.SYSMGR.][horcm]run1.err
%RUN-S-PROC_ID, identification of created process is 00004166
```

You can also verify that HORCM daemon is running as Detached Process by using 'SHOW PROCESS' command.

```
$ show process horcm0
25-MAR-2003 23:27:27.72   User: SYSTEM           Process ID:
00004160
                          Node: VMS4             Process name:
"HORCM0"
Terminal:
User Identifier:    [SYSTEM]
Base priority:      4
Default file spec:  Not available
Number of Kthreads: 1
Soft CPU Affinity: off
$$ horcmshutdown 0 1
inst 0:
HORCM Shutdown inst 0 !!!
inst 1:
HORCM Shutdown inst 1 !!!
$
```

(5) Command device

CCI uses the SCSI class driver for accessing the command device on the 9900V, because OpenVMS does not provide the raw I/O device such as UNIX, and defines "DG*,DK*,GK*" as the logical name for the device. The SCSI class driver requires the following privileges: DIAGNOSE and PHY_IO or LOG_IO (for details see the OpenVMS manual).

In CCI version 01-12-03/03 or earlier, you need to define the Physical device as either DG* or DK* or GK* by using DEFINE/SYSTEM command. For example:

```
$ show device
Device              Device   Error    Volume     Free  Trans Mnt
Name                Status   Count     Label    Blocks Count Cnt
VMS4$DKB0:          Online       0
VMS4$DKB100:        Mounted      0    ALPHASYS  30782220   414   1
VMS4$DKB200:        Online       0
VMS4$DKB300:        Online       0
VMS4$DQA0:          Online       0
$1$DGA145: (VMS4)   Online       0
$1$DGA146: (VMS4)   Online       0
:
:
$1$DGA153: (VMS4)   Online       0
$ DEFINE/SYSTEM DKA145 $1$DGA145:
```

```
$ DEFINE/SYSTEM DKA146 $1$DGA146:
:
:
$ DEFINE/SYSTEM DKA153 $1$DGA153:
```

(6) -zx option for CCI commands

The -zx option for CCI commands uses the select() function to wait for an event from STDIN. But the OpenVMS select() function does not support any wait events from STDIN, and select() for terminal(STDIN) is unable to echo back the terminal input.

Therefore, the-zx option for CCI commands is not supported, and is deleted from the Help & Usage display for the -zx option.

(7) Syslog function

The OpenVMS does not support the syslog function as does UNIX. Therefore, CCI does not support the syslog function. An an alternative is to use the HORCM logging file for HORCM daemon.

(8) Start up log files

In start up of HORCM, CCI does share a start up log file by two process for start-up, but CRTL does not work correctly to share from two processes.

As workaround, CCI has two start-up log files separated by using PID as follows.

For example, under the SYS$POSIX_ROOT:[HORCM.LOG*.CURLOG] directory:

HORCMLOG_VMS4 HORCM_VMS4_**10530**.LOG HORCM_VMS4_**10531**.LOG

(9) Option syntax and Case sensitivity

VMS users are not accustomed to commands being case sensitive and using option syntax, as on UNIX. Therefore, CCI changes "case sensitivity" and "-xxx" syntax for options in order to match the expectations of VMS users as much as possible. CCI allows "**/xxx**" syntax for options as well as "**-xxx**" option, but this is a minor option.

The followings upper-case strings are not case sensitive:

- **DG* or DK* or GK* for Logical Device Name**
- **-CLI or -FCA(-FHORC) or -FBC(-FMRCF) for the pair* command options**
- **-CLI or -CLIWP or -CLIWN or -CM for the inqraid options**
- **Environmental variable name such as HORCMINST … controlled by CRTL**

Also you need to define the following logical name to your **login.com** in order to distinguish the uppercase and the lowercase:

```
$ DEFINE DECC$ARGV_PARSE_STYLE ENABLE$ SET PROCESS/
PARSE_STYLE=EXTENDED
```

(10) Regarding using spawn command

You can also start the HORCM process easily by using the spawn command. The following examples used SPAWN command on DCL.

For example, using spawn:

```
$ spawn /NOWAIT /PROCESS=horcm0 horcmstart 0
%DCL-S-SPAWNED, process HORCM0 spawned
$
   starting HORCM inst 0
$ spawn /NOWAIT /PROCESS=horcm1 horcmstart 1
%DCL-S-SPAWNED, process HORCM1 spawned
$
   starting HORCM inst 1
$
```

The subprocess (HORCM) created by SPAWN is terminated when the terminal is LOGOFF or the session is terminated. If you want independence Process to the terminal LOGOFF, then use the "RUN /DETACHED" command.

(11) Privileges for using CCI

- **A user account for CCI must have the same privileges as "SYSTEM" that can use the SCSI Class driver and Mailbox driver directly.**

  Some OpenVMS system administrators might not allow CCI to run from the system account (equivalent to root on UNIX). Therefore, create another CCI account on the system, such as "RMadmin," that has the equivalent privileges to "SYSTEM". In this way, it is not necessary for system administrators to share the system passwords.

- **CCI uses the Mailbox driver to enable communication between CCI and HORCM. Therefore, CCI and HORCM must have the same privileges.**

  If CCI and HORCM are executing in different privileges (different user), then CCI hangs or is unable to attach to HORCM because CCI and HORCM are denied communication through the Mailbox.

(12) Installation

CCI is provided a file for installing, for example the following PCSI (PolyCenter Software Installation) file.

- HITACHI-ARMVMS-RM-V0122-2-1.PCSI - HITACHI-I64VMS-RM-V0122-2-1.PCSI

CCI also requires that **POSIX_ROOT** be on the system, so you must define the **POSIX_ROOT** before installing CCI.

It is recommended that you previously define the three logical names shown below for CCI in LOGIN.COM.

```
$ DEFINE/TRANSLATION=(CONCEALED,TERMINAL) SYS$POSIX_ROOT  "Device:
[directory]"
$ DEFINE DCL$PATH SYS$POSIX_ROOT:[horcm.usr.bin],SYS$POSIX_ROOT:
[horcm.etc]
$ DEFINE/TABLE=LNM$PROCESS_DIRECTORY LNM$TEMPORARY_MAILBOX LNM$GROUP
$ DEFINE DECC$ARGV_PARSE_STYLE ENABLE
$ SET PROCESS/PARSE_STYLE=EXTENDED
```

where **Device**:[**directory**] is defined as SYS$POSIX_ROOT

For Installing:

```
$ PRODUCT INSTALL RM /source=Device:[directory]/LOG -
  _$ /destination=SYS$POSIX_ROOT:[000000]
  Device:[directory] where HITACHI-ARMVMS-RM-V0122-2-1.PCSI exists
:
:
$ PRODUCT SHOW PRODUCT RM
---------------------------------------- ----------- ------------
PRODUCT                                     KIT TYPE    STATE
---------------------------------------- ----------- ------------
HITACHI ARMVMS RM V1.22-2           Full LP     Installed
---------------------------------------- ----------- ------------
$ raidqry -h
Model  : RAID-Manager/OpenVMS
Ver&Rev: 01-29-03/05
:
:
```

For Installation history:

```
$ PRODUCT SHOW HISTORY RM /FULL
```

For removing :

```
$ PRODUCT REMOVE RM /LOG
```

(13) About exit code of the command on DCL

CCI return codes are the same for all platforms. However, if the process was invoked by the DCL, the status is interpreted by DCL and a message appears as below.

```
-------------------------on DCL of OpenVMS-----------------------
$ pairdisplay jjj
PAIRDISPLAY: requires '-jjj' or '/jjj' as argument
PAIRDISPLAY: [EX_REQARG] Required Arg list
Refer to the command log(SYS$POSIX_ROOT:[HORCM.LOG]HORCC_RMOVMS.LOG
(/HORCM/log/horcc_rmovms.log)) for details.
$ sh sym $status
  $STATUS == "%X0035A7F1"
$
$ pairdisplay -g aaa
PAIRDISPLAY: [EX_ATTHOR] Can't be attached to HORC manager
Refer to the command log(SYS$POSIX_ROOT:[HORCM.LOG]HORCC_RMOVMS.LOG
(/HORCM/log/horcc_rmovms.log)) for details.
$ sh sym $status
  $STATUS == "%X0035A7D9"
-------------------------on DCL of OpenVMS-----------------------
```

You can calculate the CCI "Exit code" from $status of DCL using the formula below.

```
Exit code of RM command = ( $status % 2048 ) / 8
```

Known issues

Rebooting on PAIR state (Writing disable)

OpenVMS does not show the volumes of writing disable (for example, SVOL_PAIR) at start-up of system, therefore the S-VOLs are hidden when rebooting in PAIR state or SUSPEND(read only) mode. You are able to verify that the "show device" and "inqraid"command does not show the S-VOLs after reboot as below (notice that **DGA148** and **DGA150** devices are SVOL_PAIR).

```
$ sh dev dg
Device                Device     Error    Volume  Free   Trans  Mnt
 Name                 Status     Count    Label  Blocks  Count  Cnt
$1$DGA145:   (VMS4)  Online         0
$1$DGA146:   (VMS4)  Online         0
$1$DGA147:   (VMS4)  Online         0
$1$DGA149:   (VMS4)  Online         0
$1$DGA151:   (VMS4)  Online         0
$1$DGA152:   (VMS4)  Online         0
$1$DGA153:   (VMS4)  Online         0

$ inqraid DKA145-153 -cli
DEVICE_FILE  PORT   SERIAL LDEV CTG H/M/12 SSID R:Group PRODUCT_ID
DKA145       CL1-H   30009   145  -      -    -       -  OPEN-9-CM
DKA146       CL1-H   30009   146  - s/P/ss 0004 5:01-11  OPEN-9
DKA147       CL1-H   30009   147  - s/S/ss 0004 5:01-11  OPEN-9
DKA148       -           -     -  -      -    -       -  -
DKA149       CL1-H   30009   149  - P/s/ss 0004 5:01-11  OPEN-9
DKA150       -           -     -  -      -    -       -  -
DKA151       CL1-H   30009   151  - P/s/ss 0004 5:01-11  OPEN-9
DKA152       CL1-H   30009   152  - s/s/ss 0004 5:01-11  OPEN-9
DKA153       CL1-H   30009   153  - s/s/ss 0004 5:01-11  OPEN-9
$ inqraid DKA148
sys$assign : DKA148 -> errcode = 2312
DKA148 -> OPEN: no such device or address
```

After making the S-VOL for Writing enable by using "**pairsplit**" or "**horctakeover**" command, you need to perform the "**mcr sysman**" command in order to use the S-VOLs for back-up or disaster recovery.

```
$ pairsplit -g CAVG -rw
$ mcr sysman
SYSMAN> io auto
SYSMAN> exit
$ sh dev dg
Device                Device     Error     Volume Free  Trans Mnt
 Name                 Status     Count     Label Blocks Count Cnt
$1$DGA145:   (VMS4)  Online         0
$1$DGA146:   (VMS4)  Online         0
$1$DGA147:   (VMS4)  Online         0
$1$DGA148:   (VMS4)  Online         0
$1$DGA149:   (VMS4)  Online         0
$1$DGA150:   (VMS4)  Online         0
```

```
$1$DGA151:  (VMS4)  Online          0
$1$DGA152:  (VMS4)  Online          0
$1$DGA153:  (VMS4)  Online          0
```

Startup procedures using detached process on DCL

(1) Create the shareable Logical name for RAID if undefined initially.

CCI needs to define the physical device (**1DGA145**…) as either DG* or DK* or GK* by using SHOW DEVICE command and **DEFINE/SYSTEM** command, but then does not need to be mounted in CCI version 01-12-03/03 or earlier.

```
$ show device
Device              Device   Error  Volume    Free   Trans Mnt
Name                Status   Count   Label   Blocks  Count Cnt
$1$DGA145:   (VMS4) Online       0
$1$DGA146:   (VMS4) Online       0
:
:
$1$DGA153:   (VMS4) Online       0
$
$ DEFINE/SYSTEM DKA145 $1$DGA145:
$ DEFINE/SYSTEM DKA146 $1$DGA146:
:
:
$ DEFINE/SYSTEM DKA153 $1$DGA153:
```

(2) Define the CCI environment in LOGIN.COM.

You need to define the Path for the CCI commands to **DCL$PATH** as the foreign command. See the section about Automatic Foreign Commands in the OpenVMS user documentation.

```
$ DEFINE DCL$PATH SYS$POSIX_ROOT:[horcm.usr.bin],SYS$POSIX_ROOT:
[horcm.etc]
```

If CCI and HORCM are executing in different jobs (different terminal), then you must redefine **LNM$TEMPORARY_MAILBOX** in the LNM $PROCESS_DIRECTORY table as follows:

```
$ DEFINE/TABLE=LNM$PROCESS_DIRECTORY LNM$TEMPORARY_MAILBOX LNM$GROUP
```

(3) Discover and describe the command device on SYS$POSIX_ROOT:[etc]horcm0.conf.

```
$ inqraid DKA145-151 -CLI
DEVICE_FILE PORT  SERIAL LDEV CTG H/M/12 SSID R:Group PRODUCT_ID
DKA145     CL1-H   30009  145   -      -    -       -  OPEN-9-CM
DKA146     CL1-H   30009  146   - s/S/ss 0004 5:01-11  OPEN-9
DKA147     CL1-H   30009  147   - s/P/ss 0004 5:01-11  OPEN-9
DKA148     CL1-H   30009  148   - s/S/ss 0004 5:01-11  OPEN-9
DKA149     CL1-H   30009  149   - s/P/ss 0004 5:01-11  OPEN-9
DKA150     CL1-H   30009  150   - s/S/ss 0004 5:01-11  OPEN-9
DKA151     CL1-H   30009  151   - s/P/ss 0004 5:01-11  OPEN-9
SYS$POSIX_ROOT:[etc]horcm0.conf
HORCM_MON
#ip_address        service         poll(10ms)     timeout(10ms)
127.0.0.1          30001           1000              3000
HORCM_CMD
```

```
#dev_name          dev_name        dev_name
DKA145
```

You will have to start HORCM without a description for HORCM_DEV and HORCM_INST because the target ID & LUN are Unknown.

You can determine a mapping of a physical device with a logical name easily by using the **raidscan -find** command option.

(4) Execute an 'horcmstart 0'.

```
$ run /DETACHED SYS$SYSTEM:LOGINOUT.EXE /PROCESS_NAME=horcm0 -
_$ /INPUT=VMS4$DKB100:[SYS0.SYSMGR.][horcm]loginhorcm0.com -
_$ /OUTPUT=VMS4$DKB100:[SYS0.SYSMGR.][horcm]run0.out -
_$ /ERROR=VMS4$DKB100:[SYS0.SYSMGR.][horcm]run0.err
%RUN-S-PROC_ID, identification of created process is 00004160
```

(5) Verify a physical mapping of the logical device.

```
$ HORCMINST := 0
$ raidscan -pi DKA145-151 -find
DEVICE_FILE    UID  S/F PORT  TARG  LUN  SERIAL  LDEV  PRODUCT_ID
DKA145           0   F  CL1-H    0    1   30009   145  OPEN-9-CM
DKA146           0   F  CL1-H    0    2   30009   146  OPEN-9
DKA147           0   F  CL1-H    0    3   30009   147  OPEN-9
DKA148           0   F  CL1-H    0    4   30009   148  OPEN-9
DKA149           0   F  CL1-H    0    5   30009   149  OPEN-9
DKA150           0   F  CL1-H    0    6   30009   150  OPEN-9
DKA151           0   F  CL1-H    0    7   30009   151  OPEN-9
$ horcmshutdown 0
inst 0:
HORCM Shutdown inst 0 !!!
```

(6) Describe the known HORCM_DEV on SYS$POSIX_ROOT:[etc]horcm*.conf

For horcm0.conf

```
HORCM_DEV
#dev_group    dev_name     port#     TargetID        LU#     MU#
VG01          oradb1       CL1-H            0          2       0
VG01          oradb2       CL1-H            0          4       0
VG01          oradb3       CL1-H            0          6       0
HORCM_INST
#dev_group        ip_address      service
VG01              HOSTB           horcm1
```

For horcm1.conf

```
HORCM_DEV
#dev_group    dev_name     port#     TargetID        LU#     MU#
VG01          oradb1       CL1-H            0          3       0
VG01          oradb2       CL1-H            0          5       0
VG01          oradb3       CL1-H            0          7       0
HORCM_INST
#dev_group        ip_address      service
VG01              HOSTA           horcm0
```

Defines the UDP port name for HORCM communication in the **SYS $SYSROOT:[000000.TCPIP$ETC]SERVICES.DAT** file, as in the example below.

```
horcm0 30001/udp horcm1 30002/udp
```

(7) Start **horcm0** and **horcm1** as the Detached process.

```
$ run /DETACHED SYS$SYSTEM:LOGINOUT.EXE /PROCESS_NAME=horcm0 -
_$ /INPUT=VMS4$DKB100:[SYS0.SYSMGR.][horcm]loginhorcm0.com -
_$ /OUTPUT=VMS4$DKB100:[SYS0.SYSMGR.][horcm]run0.out -
_$ /ERROR=VMS4$DKB100:[SYS0.SYSMGR.][horcm]run0.err
%RUN-S-PROC_ID, identification of created process is 00004160
$
$$ run /DETACHED SYS$SYSTEM:LOGINOUT.EXE /PROCESS_NAME=horcm1 -
_$ /INPUT=VMS4$DKB100:[SYS0.SYSMGR.][horcm]loginhorcm1.com -
_$ /OUTPUT=VMS4$DKB100:[SYS0.SYSMGR.][horcm]run1.out -
_$ /ERROR=VMS4$DKB100:[SYS0.SYSMGR.][horcm]run1.err
%RUN-S-PROC_ID, identification of created process is 00004166
```

You can verify that HORCM daemon is running as Detached Process by using the **SHOW PROCESS** command.

```
$ show process horcm0
25-MAR-2003 23:27:27.72  User: SYSTEM     Process ID:   0004160
                         Node: VMS4       Process name:"HORCM0"
Terminal:
User Identifier:    [SYSTEM]
Base priority:      4
Default file spec:  Not available
Number of Kthreads: 1

Soft CPU Affinity: off
```

Command examples in DCL

(1) Setting the environment variable by using Symbol.

```
$ HORCMINST := 0$ HORCC_MRCF := 1
$ raidqry -l
No Group   Hostname   HORCM_ver  Uid  Serial#  Micro_ver Cache(MB)
1  ---     VMS4     01-29-03/05    0   30009  50-04-00/00    8192
$
$ pairdisplay -g VG01 -fdc
Group PairVol(L/R) Device_File M,Seq#,LDEV#.P/S,Status, % ,P-LDEV# M
VG01  oradb1(L)    DKA146     0 30009  146..S-VOL PAIR, 100  147 -
VG01  oradb1(R)    DKA147     0 30009  147..P-VOL PAIR, 100  146 -
VG01  oradb2(L)    DKA148     0 30009  148..S-VOL PAIR, 100  149 -
VG01  oradb2(R)    DKA149     0 30009  149..P-VOL PAIR, 100  148 -
VG01  oradb3(L)    DKA150     0 30009  150..S-VOL PAIR, 100  151 -
VG01  oradb3(R)    DKA151     0 30009  151..P-VOL PAIR, 100  150 -
$
```

(2) Removing the environment variable.

```
$ DELETE/SYMBOL HORCC_MRCF
$ pairdisplay -g VG01 -fdc
Group PairVol(L/R) Device_File  ,Seq#,LDEV#.P/S,Status,Fence,  % ,P-
LDEV# M
VG01 oradb1(L)  DKA146   30009 146..SMPL ---- ------,-----  ---- -
VG01 oradb1(R)  DKA147   30009 147..SMPL ---- ------,-----  ---- -
VG01 oradb2(L)  DKA148   30009 148..SMPL ---- ------,-----  ---- -
VG01 oradb2(R)  DKA149   30009 149..SMPL ---- ------,-----  ---- -
VG01 oradb3(L)  DKA150   30009 150..SMPL ---- ------,-----  ---- -
VG01 oradb3(R)  DKA151   30009 151..SMPL ---- ------,-----  ---- -
$
```

(3) Changing the default log directory.

```
$ HORCC_LOG := /horcm/horcm/TEST
$ pairdisplay
PAIRDISPLAY: requires '-x xxx' as argument
PAIRDISPLAY: [EX_REQARG] Required Arg list
Refer to the command log(SYS$POSIX_ROOT:
[HORCM.HORCM.TEST]HORCC_VMS4.LOG (/HORCM
/HORCM/TEST/horcc_VMS4.log)) for details.
```

(4) Turning back to the default log directory.

```
$ DELETE/SYMBOL HORCC_LOG
```

(5) Specifying the device described in scandev.LIS.

```
$ define dev_file SYS$POSIX_ROOT:[etc]SCANDEV
$ type dev_file
DKA145-150
$
$ pipe type dev_file | inqraid -CLI
DEVICE_FILE  PORT  SERIAL LDEV CTG H/M/12 SSID R:Group PRODUCT_ID
DKA145      CL1-H   30009  145  -       -    -       - OPEN-9-CM
DKA146      CL1-H   30009  146  -  s/S/ss 0004 5:01-11 OPEN-9
DKA147      CL1-H   30009  147  -  s/P/ss 0004 5:01-11 OPEN-9
DKA148      CL1-H   30009  148  -  s/S/ss 0004 5:01-11 OPEN-9
DKA149      CL1-H   30009  149  -  s/P/ss 0004 5:01-11 OPEN-9
DKA150      CL1-H   30009  150  -  s/S/ss 0004 5:01-11 OPEN-9
```

(6) Making the configuration file automatically.

You can omit steps from (3) to (6) on the Start-up procedures by using the mkconf command.

```
$ type dev_file
DKA145-150
$
$ pipe type dev_file | mkconf -g URA -i 9
starting HORCM inst 9
HORCM Shutdown inst 9 !!!
A CONFIG file was successfully completed.
HORCM inst 9 finished successfully.
starting HORCM inst 9
DEVICE_FILE   Group  PairVol    PORT   TARG  LUN M  SERIAL  LDEV
DKA145        -      -          -         -    - -   30009   145
DKA146          URA  URA_000    CL1-H     0    2 0   30009   146
DKA147          URA  URA_001    CL1-H     0    3 0   30009   147
DKA148          URA  URA_002    CL1-H     0    4 0   30009   148
DKA149          URA  URA_003    CL1-H     0    5 0   30009   149
DKA150          URA  URA_004    CL1-H     0    6 0   30009   150
HORCM Shutdown inst 9 !!!
Please check 'SYS$SYSROOT:[SYSMGR]HORCM9.CONF','SYS$SYSROOT:
[SYSMGR.LOG9.CURLOG]
HORCM_*.LOG', and modify 'ip_address & service'.
HORCM inst 9 finished successfully.
$
SYS$SYSROOT:[SYSMGR]horcm9.conf (/sys$sysroot/sysmgr/horcm9.conf)

# Created by mkconf on Thu Mar 13 20:08:41

HORCM_MON
#ip_address        service         poll(10ms)     timeout(10ms)
127.0.0.1          52323                1000             3000
```

```
HORCM_CMD
#dev_name          dev_name       dev_name
#UnitID 0 (Serial# 30009)
DKA145

# ERROR [CMDDEV] DKA145               SER =    30009  LDEV =  145
[ OPEN-9-CM  `
HORCM_DEV
#dev_group   dev_name        port#     TargetID     LU#     MU#
# DKA146         SER =    30009  LDEV =  146 [ FIBRE FCTBL = 3 ]
URA          URA_000         CL1-H            0       2       0
# DKA147         SER =    30009  LDEV =  147 [ FIBRE FCTBL = 3 ]
URA          URA_001         CL1-H            0       3       0
# DKA148         SER =    30009  LDEV =  148 [ FIBRE FCTBL = 3 ]
URA          URA_002         CL1-H            0       4       0
# DKA149         SER =    30009  LDEV =  149 [ FIBRE FCTBL = 3 ]
URA          URA_003         CL1-H            0       5       0
# DKA150         SER =    30009  LDEV =  150 [ FIBRE FCTBL = 3 ]
URA          URA_004         CL1-H            0       6       0

HORCM_INST
#dev_group        ip_address      service
URA              127.0.0.1       52323
```

(7) Using 1* naming as native device name.

You can use the native device without DEFINE/SYSTEM command by specifying 1* naming directly.

```
$ inqraid $1$DGA145-155 -CLI
DEVICE_FILE  PORT  SERIAL LDEV CTG H/M/12 SSID R:Group PRODUCT_ID
$1$DGA145    CL2-H  30009  145   -      -    -       - OPEN-9-CM
$1$DGA146    CL2-H  30009  146   - s/P/ss 0004 5:01-11 OPEN-9
$1$DGA147    CL2-H  30009  147   - s/S/ss 0004 5:01-11 OPEN-9
$1$DGA148    CL2-H  30009  148   0 P/s/ss 0004 5:01-11 OPEN-9

$ pipe show device   | INQRAID -CLI
DEVICE_FILE  PORT  SERIAL LDEV CTG H/M/12 SSID R:Group PRODUCT_ID
$1$DGA145    CL2-H  30009  145   -      -    -       - OPEN-9-CM
$1$DGA146    CL2-H  30009  146   - s/P/ss 0004 5:01-11 OPEN-9
$1$DGA147    CL2-H  30009  147   - s/S/ss 0004 5:01-11 OPEN-9
$1$DGA148    CL2-H  30009  148   0 P/s/ss 0004 5:01-11 OPEN-9

$ pipe show device   | MKCONF -g URA -i 9
starting HORCM inst 9
HORCM Shutdown inst 9 !!!
A CONFIG file was successfully completed.
HORCM inst 9 finished successfully.
starting HORCM inst 9
DEVICE_FILE   Group  PairVol   PORT  TARG  LUN M  SERIAL  LDEV
$1$DGA145     -      -         -        -    - -   30009   145
$1$DGA146     URA    URA_000   CL2-H    0    2 0   30009   146
$1$DGA147     URA    URA_001   CL2-H    0    3 0   30009   147
$1$DGA148     URA    URA_002   CL2-H    0    4 0   30009   148
HORCM Shutdown inst 9 !!!
Please check 'SYS$SYSROOT:[SYSMGR]HORCM9.CONF','SYS$SYSROOT:
[SYSMGR.LOG9.CURLOG]
HORCM_*.LOG', and modify 'ip_address & service'.
HORCM inst 9 finished successfully.
$
```

```
$ pipe show device   | RAIDSCAN -find
DEVICE_FILE   UID  S/F PORT   TARG  LUN  SERIAL  LDEV  PRODUCT_ID
$1$DGA145       0   F  CL2-H     0    1   30009   145  OPEN-9-CM
$1$DGA146       0   F  CL2-H     0    2   30009   146  OPEN-9
$1$DGA147       0   F  CL2-H     0    3   30009   147  OPEN-9
$1$DGA148       0   F  CL2-H     0    4   30009   148  OPEN-9

$ pairdisplay -g BCVG -fdc
Group PairVol(L/R) Device_File M ,Seq#,LDEV#..P/S,Status, % ,P-LDEV#
M
BCVG  oradb1(L)  $1$DGA146  0 30009  146..P-VOL PAIR, 100   147 -
BCVG  oradb1(R)  $1$DGA147  0 30009  147..S-VOL PAIR, 100   146 -
$
$ pairdisplay -dg $1$DGA146
Group PairVol(L/R) (Port#,TID, LU-M) ,Seq#,LDEV#..P/S,Status, Seq#,P-
LDEV# M
BCVG oradb1(L) (CL1-H,0, 2-0) 30009 146..P-VOL PAIR, 30009  147 -
BCVG oradb1(R) (CL1-H,0, 3-0) 30009  47..S-VOL PAIR, -----  146 -
$
```

Start-up procedures in bash

Do not use CCI through the bash, because the bash is not provided as an official release in OpenVMS.

(1) Create the shareable Logical name for RAID if undefined initially.

You need to define the Physical device (**1DGA145**…) as either DG* or DK* or GK* by using the SHOW DEVICE command and the **DEFINE/SYSTEM** command, but then it does not need to be mounted.

```
$ show device
Device              Device   Error  Volume     Free   Trans Mnt
Name                Status   Count   Label    Blocks  Count Cnt
$1$DGA145:  (VMS4)  Online          0
$1$DGA146:  (VMS4)  Online          0
:
:
$1$DGA153:  (VMS4)  Online          0
$$ DEFINE/SYSTEM DKA145 $1$DGA145:
$ DEFINE/SYSTEM DKA146 $1$DGA146:
:
:
$ DEFINE/SYSTEM DKA153 $1$DGA153:
```

(2) Define the CCI environment in LOGIN.COM.

If CCI and HORCM are executing in different jobs (different terminal), then you must redefine **LNM$TEMPORARY_MAILBOX** in the LNM $PROCESS_DIRECTORY table as follows:

$ DEFINE/TABLE=LNM$PROCESS_DIRECTORY LNM $TEMPORARY_MAILBOX LNM$GROUP

(3) Discover and describe the command device on /etc/horcm0.conf.

```
bash$ inqraid DKA145-151 -CLI
DEVICE_FILE  PORT   SERIAL LDEV CTG H/M/12  SSID R:Group PRODUCT_ID
DKA145       CL1-H  30009  145   -      -     -       - OPEN-9-CM
DKA146       CL1-H  30009  146   - s/S/ss  0004 5:01-11 OPEN-9
```

```
DKA147       CL1-H  30009  147   - s/P/ss  0004 5:01-11 OPEN-9
DKA148       CL1-H  30009  148   - s/S/ss  0004 5:01-11 OPEN-9
DKA149       CL1-H  30009  149   - s/P/ss  0004 5:01-11 OPEN-9
DKA150       CL1-H  30009  150   - s/S/ss  0004 5:01-11 OPEN-9
DKA151       CL1-H  30009  151   - s/P/ss  0004 5:01-11 OPEN-9
```

/etc/horcm0.conf

```
HORCM_MON
#ip_address        service         poll(10ms)     timeout(10ms)
127.0.0.1          52000           1000              3000

HORCM_CMD
#dev_name          dev_name        dev_name
DKA145

HORCM_DEV
#dev_group         dev_name        port#     TargetID   LU#   MU#

HORCM_INST
#dev_group         ip_address      service
```

You will have to start HORCM without a description for HORCM_DEV and HORCM_INST **because target ID & Lun are Unknown**.

You can determine a mapping of a physical device with a logical name easily by using the **raidscan -find** command option.

(4) Execute an 'horcmstart 0' as background.

```
bash$ horcmstart 0 &
18
bash$
      starting HORCM inst 0
```

(5) Verify a physical mapping of the logical device.

```
bash$ export HORCMINST=0
bash$ raidscan -pi DKA145-151 -find
DEVICE_FILE   UID  S/F PORT   TARG  LUN  SERIAL  LDEV  PRODUCT_ID
DKA145          0   F  CL1-H     0    1   30009   145  OPEN-9-CM
DKA146          0   F  CL1-H     0    2   30009   146  OPEN-9
DKA147          0   F  CL1-H     0    3   30009   147  OPEN-9
DKA148          0   F  CL1-H     0    4   30009   148  OPEN-9
DKA149          0   F  CL1-H     0    5   30009   149  OPEN-9
DKA150          0   F  CL1-H     0    6   30009   150  OPEN-9
DKA151          0   F  CL1-H     0    7   30009   151  OPEN-9
```

(6) Describe the known HORCM_DEV on /etc/horcm*.conf.

FOR horcm0.conf

```
HORCM_DEV
#dev_group    dev_name    port#    TargetID    LU#    MU#
VG01          oradb1      CL1-H           0      2      0
VG01          oradb2      CL1-H           0      4      0
VG01          oradb3      CL1-H           0      6      0
HORCM_INST
#dev_group         ip_address      service
VG01               HOSTB           horcm1
```

FOR horcm1.conf

```
HORCM_DEV
#dev_group    dev_name    port#    TargetID    LU#    MU#
VG01          oradb1      CL1-H           0      3      0
VG01          oradb2      CL1-H           0      5      0
VG01          oradb3      CL1-H           0      7      0
HORCM_INST
#dev_group        ip_address      service
VG01              HOSTA           horcm0
```

(7) Start 'horcmstart 0 1'.

The subprocess(HORCM) created by bash is terminated when the bash is EXIT.

```
bash$ horcmstart 0 &
19
bash$
      starting HORCM inst 0
bash$ horcmstart 1 &
20
bash$
      starting HORCM inst 1
```

Using CCI with Hitachi and other storage systems

Table 1-5 Relationship between CCI, RAID Manager, and RAID Storage System on page 1-32 shows the related two controls between CCI and the RAID storage system type (Hitachi or HPE). Figure 1-7 Relationship between application, CCI, RAID Manager, and storage system on page 1-32 shows the relationship between the application, CCI, and RAID storage system.

- The following common API/CLI commands are rejected with EX_ERPERM(*1) by connectivity of CCI with RAID storage system:
  `horctakeover`
  `paircurchk`
  `paircreate`
  `pairsplit`
  `pairresync`
  `pairvolchk`
  `pairevtwait`
  `pairdisplay`
  `raidscan` (`-find` option only)
  `raidar`
  `raidvchkset`
  `raidvchkdsp`
  `raidvchkscan`
- The following XP API/CLI commands are rejected with EX_ERPERM(*2) on the storage system even when both CCI and RAID Manager XP (provided by HPE) are installed:
  `pairvolchk -s`
  `pairdisplay -CLI`

`raidscan -CLI`

`paircreate -m noread` for TrueCopy/TrueCopy Async/Universal Replicator

`paircreate -m dif/inc` for ShadowImage

Table 1-5 Relationship between CCI, RAID Manager, and RAID Storage System

Version	Installation Order	RAID System	Common API/CLI	XP API/CLI
CCI 01-08-03/00 or higher	CCI	Hitachi	Enable	Cannot use (except CLI)
		HPE	EX_ERPERM	
	Install CCI after installing RAID Manager XP	Hitachi	Enable	
		HPE	Enable	
RAID Manager XP 01.08.00 or higher (provided by HPE)	RAID Manager XP	HPE	Enable	Enable
		Hitachi	EX_ERPERM	EX_ERPERM
	Install RAID Manager XP after installing CCI	HPE	Enable	Enable
		Hitachi	Enable	EX_ERPERM

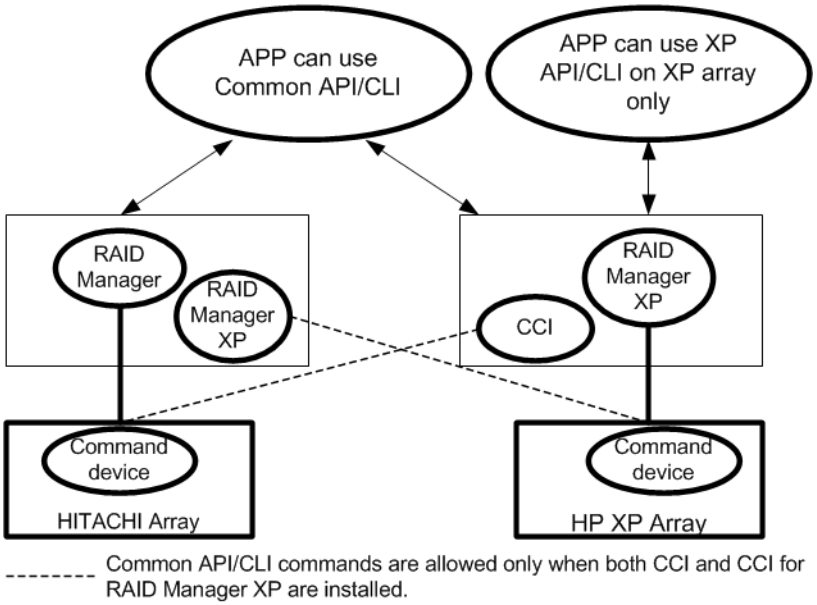

Figure 1-7 Relationship between application, CCI, RAID Manager, and storage system

2

Installing and configuring CCI

This chapter describes and provides instructions for installing and configuring CCI.

- Installing the CCI hardware
- Installing the CCI software

Installing the CCI hardware

Installation of the hardware required for CCI is performed by the user and the HDS representative. To install the hardware required for CCI operations:

1. User:
   a. Make sure that the UNIX/PC server hardware and software are properly installed and configured. For specific support information, refer to the Hitachi Data Systems interoperability matrix at https://support.hds.com.
   b. If you will be performing remote replication operations (for example, Universal Replicator, TrueCopy), identify the primary and secondary volumes, so that the hardware and software components can be installed and configured properly.
2. HDS representative:
   a. Connect the RAID storage systems to the hosts. Refer to the Maintenance Manual for the storage system and the *Open-Systems Host Attachment Guide* (MK-90RD7037). Make sure to set the appropriate system option modes (SOMs) and host mode options (HMOs) for the operational environment.
   b. Configure the RAID storage systems that will contain primary volumes for replication to report sense information to the hosts.
   c. Set the SVP time to the local time so that the time stamps are correct. For VSP Gx00 models and VSP Fx00 models, use the maintenance utility to set the system date and time to the local time.
   d. Remote replication: Install the remote copy connections between the RAID storage systems. For detailed information, see the applicable user guide (for example, *Hitachi Universal Replicator User Guide*).
3. User and HDS representative:
   a. Ensure that the storage systems are accessible via Hitachi Device Manager - Storage Navigator. For details, see the *System Administrator Guide* for your storage system.
   b. Ensure that the storage systems are accessible via Hitachi Command Suite. For details, see the *Hitachi Command Suite User Guide*.
   c. Install and enable the applicable license key of your program product (for example, TrueCopy, ShadowImage, LUN Manager, Universal Replicator for Mainframe, Data Retention Utility) on the storage systems. For details about installing license keys, see the *System Administrator Guide*.
4. User: Configure the RAID storage systems for operations as described in the user documentation. For example, before you can create TrueCopy volume pairs using CCI, you need to configure the ports on the storage systems and establish the MCU-RCU paths.

Installing the CCI software

To install CCI, log in with "root user" or "administrator" privileges. The login user type is determined by the operating system. You can install the CCI software on the host servers with assistance as needed from the HDS representative.

The installation must be done in the following order:

1. Install the CCI software.
2. Set the command device.
3. Create the configuration definition files.
4. Set the environmental variables.

UNIX installation

If you are installing CCI from the media for the program product, use the RMinstsh and RMuninst scripts on the program product media to automatically install and remove the CCI software. (For LINUX/IA64 or LINUX/X64, move to the LINUX/IA64 or LINUX/X64 directory and then execute ../../RMinstsh.) For other media, use the following instructions. The following instructions refer to UNIX commands that might be different on your platform. Consult your OS documentation (for example, UNIX man pages) for platform-specific command information.

To install the CCI software into the root directory:

1. Insert the installation media into the I/O device properly.
2. Move to the current root directory: `# cd /`
3. Copy all files from the installation media using the cpio command:
   ```
   # cpio  -idmu  <  /dev/XXXX                XXXX = I/O device
   ```
   Preserve the directory structure (d flag) and file modification times (m flag), and copy unconditionally (u flag). For floppy disks, load them sequentially, and repeat the command. An I/O device name of floppy disk designates a surface partition of the raw device file (unpartitioned raw device file).
4. Execute the CCI installation command:
   ```
   # /HORCM/horcminstall.sh
   ```
5. Verify installation of the proper version using the raidqry command:
   ```
   # raidqry -h
   Model: RAID-Manager/HP-UX
   Ver&Rev: 01-29-03/05
   Usage: raidqry [options]
   ```

To install the CCI software into a non-root directory:

1. Insert the installation media into the proper I/O device.
2. Move to the desired directory for CCI. The specified directory must be mounted by a partition of except root disk or an external disk.
   ```
   # cd  /Specified Directory
   ```
3. Copy all files from the installation media using the cpio command:

```
# cpio  -idmu  <  /dev/XXXX                XXXX = I/O device
```

Preserve the directory structure (d flag) and file modification times (m flag), and copy unconditionally (u flag). For floppy disks, load them sequentially, and repeat the command. An I/O device name of floppy disk designates a surface partition of the raw device file (unpartitioned raw device file).

4. Make a symbolic link for /HORCM:
```
# ln  -s   /Specified Directory/HORCM   /HORCM
```
5. Execute the CCI installation command:
```
# /HORCM/horcminstall.sh
```
6. Verify installation of the proper version using the raidqry command:
```
# raidqry -h
Model: RAID-Manager/HP-UX
Ver&Rev: 01-29-03/05
Usage: raidqry [options]
```

Changing the CCI user (UNIX systems)

Just after installation, CCI can be operated only by the root user. When operating CCI by assigning a different user for CCI management, you need to change the owner of the CCI directory and owner's privilege, specify environment variables, and so on. Use the following procedure to change the configuration to allow a different user to operate CCI.

To change the CCI user:

1. Change the owner of the following CCI files from the root user to the desired user name:
   - /HORCM/etc/horcmgr
   - All CCI commands in the /HORCM/usr/bin directory
   - /HORCM/log directory
   - All CCI log directories in the /HORCM/log* directories
   - /HORCM/.uds directory
2. Give the newly assigned user the privilege of writing to the following CCI directories:
   - /HORCM/log
   - /HORCM/log* (when the /HORCM/log* directory exists)
   - /HORCM (when the /HORCM/log* directory does not exist)
3. Change the owner of the raw device file of the HORCM_CMD (control device) command device in the configuration definition file from the root user to the desired user name.
4. Optional: Establishing the HORCM (/etc/horcmgr) start environment: If you have designation of the full environment variables (HORCM_LOG HORCM_LOGS), then start the horcmstart.sh command without an argument. In this case, the HORCM_LOG and HORCM_LOGS directories must be owned by the CCI administrator. The environment variable (HORCMINST, HORCM_CONF) establishes as the need arises.

5. Optional: Establishing the command execution environment: If you have designation of the environment variables (HORCC_LOG), then the HORCC_LOG directory must be owned by the CCI administrator. The environment variable (HORCMINST) establishes as the need arises.
6. Establish UNIX domain socket: If the execution user of CCI is different from user of the command, a system administrator needs to change the owner of the following directory, which is created at each HORCM(/etc/horcmgr) start-up:
    - `/HORCM/.uds/.lcmcl` directory

To reset the security of UNIX domain socket to OLD version:

- Gives writing permission to /HORCM/.uds directory
- Starts horcmstart.sh .. setting "HORCM_EVERYCLI=1" environment variable

Note: A user account for the Linux system must have the "CAP_SYS_ADMIN" and "CAP_SYS_RAWIO" privileges to use the SCSI Class driver (Command device). The system administrator can apply these privileges by using the PAM_capability module. However, if the system administrator cannot set those user privileges, then use the following method. This method starts the HORCM daemon only with the root user; as an alternative, you can execute CCI commands.

- **System administrator**: Place the script that starts up horcmstart.sh in the following directory so that the system can start HORCM from /etc/rc.d/rc: **/etc/init.d**
- **Users**: When the log directory is only accessible by the system administrator, you cannot use the **inqraid** or **raidscan -find** commands. Therefore, set the command log directory by setting the environment variables (HORCC_LOG), and executing the RM command.

Note: AIX does not allow ioctl() with the exception of the root user. CCI tries to use **ioctl(DK_PASSTHRU)** or **SCSI_Path_thru** as much as possible, if it fails, changes to **RAW_IO** follows conventional ways. Even so, CCI might encounter the AIX FCP driver, which does not support **ioctl(DK_PASSTHRU)** fully in the customer site. After this consideration, CCI also supports by defining either the following environment variable or **/HORCM/etc/USE_OLD_IOCTLfile(size=0)** that uses the RAW_IO forcibly.

Example:

```
export USE_OLD_IOCTL=1
horcmstart.sh 10
HORCM/etc:
-rw-r--r--  1 root root      0 Nov 11 11:12 USE_OLD_IOCT
-r--r--r--  1 root sys   32651 Nov 10 20:02 horcm.conf
-r-xr--r--  1 root sys  282713 Nov 10 20:02 horcmgr
```

Windows installation

Make sure to install CCI on all servers involved in CCI operations. If network (TCP/IP) is not established, install a network of Windows attachment, and add TCP/IP protocol.

To install the CCI software on a Windows system:

1. Insert the media for the program product into the proper I/O device.
2. Run Setup.exe (`\program\RM\WIN_NT\RMHORCRMXP\Setup.exe` or `\program\RM\WIN_NT\RMHORCRMXP_X64\Setup.exe` on the CD), and follow the instructions on screen to complete the installation. The install directory is HORCM (fixed value) directly under the drive.
3. Reboot the Windows server, and verify that the correct version of the of the CCI software is running on your system by executing the raidqry command:

```
D:\HORCM\etc>  raidqry -h
Model: RAID-Manager/WindowsNT
Ver&Rev: 01-30-03/xx
Usage: raidqry [options] for HORC
```

A warning message for security might appear at the initial start-up depending on the OS settings. Specify "Temporarily Allow" or "Always Allow" in the dialog box.

Installing CCI in multiple drives is not recommended. If you install CCI in multiple drives, CCI installed in the smallest drive might be used preferentially.

Changing the CCI user (Windows systems)

Users who execute CCI commands need "administrator" privileges and the right to access a log directory and the files under it. Use the following procedure to specify a user who does not have "administrator" privileges as a CCI administrator.

System Administrator Tasks

1. Add a user_name to the PhysicalDrive.

   Add the user name of the CCI administrator to the Device Objects of the command device for HORCM_CMD in the configuration definition file. For example:

```
C:\HORCM\tool\>chgacl /A:RMadmin Phys
PhysicalDrive0 -> \Device\Harddisk0\DR0
\\.\PhysicalDrive0 : changed to allow 'RMadmin'
```

2. Add a user_name to the Volume{GUID}.

   If the CCI administrator needs to use the "-x mount/umount" option for CCI commands, the system administrator must add the user name of the CCI administrator to the Device Objects of the Volume{GUID}. For example:

```
C:\HORCM\tool\>chgacl /A:RMadmin Volume
Volume{b0736c01-9b14-11d8-b1b6-806d6172696f} -> \Device\CdRom0
\\.\Volume{b0736c01-9b14-11d8-b1b6-806d6172696f} : changed to
```

```
allow 'RMadmin'
Volume{b0736c02-9b14-11d8-b1b6-806d6172696f} -> \Device\Floppy0
\\.\Volume{b0736c02-9b14-11d8-b1b6-806d6172696f} : changed to
allow 'RMadmin'
Volume{b0736c00-9b14-11d8-b1b6-806d6172696f} -> \Device
\HarddiskVolume1
\\.\Volume{b0736c00-9b14-11d8-b1b6-806d6172696f} : changed to
allow 'RMadmin'
```

3. Add a user_name to the ScsiX.

   If the CCI administrator needs to use the "-x portscan" option for CCI commands, the system administrator must add the user name of the CCI administrator to the Device Objects of the ScsiX. For example:

```
C:\HORCM\tool\>chgacl /A:RMadmin Scsi
Scsi0: -> \Device\Ide\IdePort0
\\.\Scsi0: : changed to allow 'RMadmin'
Scsi1: -> \Device\Ide\IdePort1
\\.\Scsi1: : changed to allow  'RMadmin '
```

Because the ACL (Access Control List) of the Device Objects is set every time Windows starts-up, the Device Objects are also required when Windows starts-up. The ACL is also required when new Device Objects are created.

CCI Administrator Tasks

1. Establish the HORCM (/etc/horcmgr) startup environment.

   By default, copy the configuration definition file in the following directory: **%SystemDrive%:\windows**

   Because users cannot write to this directory, the CCI administrator must change the directory by using the HORCM_CONF variable. For example:

```
C:\HORCM\etc\>set HORCM_CONF=C:\Documents and Settings\RMadmin
\horcm10.conf
C:\HORCM\etc\>set HORCMINST=10
C:\HORCM\etc\>horcmstart   [This must be started without
arguments]
```

   The mountvol command is denied use by user privilege, therefore "the directory mount" option of RM commands using the mountvol command cannot be executed.

   The inqraid "-gvinf" option uses the **%SystemDrive%:\windows** directory, so this option cannot use unless system administrator allow to write.

   However, CCI can change from the **%SystemDrive%:\windows** directory to the **%TEMP%** directory by setting the "HORCM_USE_TEMP" environment variable.

   For example:

```
C:\HORCM\etc\>set HORCM_USE_TEMP=1
C:\HORCM\etc\>inqraid $Phys -gvinf
```

2. Ensure that CCI command and the HORCM have the same privileges. If CCI command and the HORCM are executing different privileges (different users), then CCI command can not attach to HORCM (CCI command and HORCM are denied communication through the Mailslot).

However, CCI does permit a HORCM connection through the "HORCM_EVERYCLI" environment variable, as shown in the following example.

```
C:\HORCM\etc\>set HORCM_CONF=C:\Documents and Settings\RMadmin
\horcm10.conf
C:\HORCM\etc\>set HORCMINST=10
C:\HORCM\etc\>set HORCM_EVERYCLI=1
C:\HORCM\etc\>horcmstart  [This must be started without
arguments]
```

In this example, users who execute CCI commands must be restricted to use only CCI commands. This can be done using the Windows "explore" or "cacls" commands.

OpenVMS installation

Make sure to install CCI on all servers involved in CCI operations. Establish the network (TCP/IP), if not already established. CCI is provided as the following PolyCenter Software Installation (PCSI) file:

HITACHI-ARMVMS-RM-V0122-2-1.PCSI HITACHI-I64VMS-RM-V0122-2-1.PCSI

Follow the requirements and restrictions in Porting notice for OpenVMS on page 1-17.

CCI also requires that POSIX_ROOT exist on the system, so you must define the POSIX_ROOT before installing the CCI software. It is recommended that you define the following three logical names for CCI in **LOGIN.COM**:

```
$ DEFINE/TRANSLATION=(CONCEALED,TERMINAL) SYS$POSIX_ROOT "Device:
[directory]"
$ DEFINE DCL$PATH SYS$POSIX_ROOT:[horcm.usr.bin],SYS$POSIX_ROOT:
[horcm.etc]
$ DEFINE/TABLE=LNM$PROCESS_DIRECTORY LNM$TEMPORARY_MAILBOX LNM$GROUP
$ DEFINE DECC$ARGV_PARSE_STYLE ENABLE
$ SET PROCESS/PARSE_STYLE=EXTENDED
```

where Device:[directory] is defined as SYS$POSIX_ROOT

To install the CCI software on an OpenVMS system:

1. Insert and mount the provided CD or diskette.
2. Execute the following command:

   ```
   $ PRODUCT INSTALL RM /source=Device:[PROGRAM.RM.OVMS]/LOG -
   _$ /destination=SYS$POSIX_ROOT:[000000]
                Device:[PROGRAM.RM.OVMS] where HITACH-ARMVMS-RM-
   V0122-2-1.PCSI exists
   ```

3. Verify installation of the proper version using the raidqry command:

   ```
   $ raidqry -h
   Model: RAID-Manager/OpenVMS
   Ver&Rev: 01-29-03/05
   Usage: raidqry [options]
   ```

4. Follow the requirements and restrictions in Porting notice for OpenVMS on page 1-17.

Installing CCI on a PC with the VSP Gx00 models storage management software

CCI is supplied with the storage management software for VSP Gx00 models.

Installing CCI on the PC where the storage management software for VSP Gx00 models is installed allows you to use CCI of the appropriate version. The installation procedure is described below.

Note: If you installed CCI in a drive where the storage management software for VSP Gx00 models is not installed, remove CCI first, and then install it again in the drive where the storage management software is installed.

1. Right-click `<storage-management-software-installation-path>\wk\supervisor\restapi\uninstall.bat` to run as administrator.
2. When the HORCM folder is located in the same drive as the storage management software, use Windows Explore or other methods to delete the HORCM folder.

   If you installed CCI in a drive where the storage management software for VSP Gx00 models is not installed, you must remove CCI and reinstall it in the same drive as the storage management software. In this case, before installing the storage management software in step 3 below, use Windows Explorer to remove the HORCM folder located in the same folder as the storage management software.
3. Install CCI by folllowing the procedure described in Windows installation on page 2-6 in the same drive as the storage management software.
4. Right-click `<storage-management-software-installation-path>\wk\supervisor\restapi\install.bat` to run as administrator.

In-band and out-of-band operations

CCI operations can be performed using either the in-band method (all storage systems) or the out-of-band method (VSP and later).

- In-band (host-based) method. CCI commands are transferred from the client or server to the command device in the storage system via the host fibre-channel or iSCSI interface. The command device must be defined in the configuration definition file, as shown in the following figure.
- Out-of-band (LAN-based) method. CCI commands are transferred from a client PC via the LAN. For CCI on USP V/VM, to execute a command from a client PC which is not connected directly to storage systems, you must write a shell script to log in a CCI server (in-band method) via Telnet or SSH.

  For CCI on models after VSP, you can create a virtual command device in the SVP by specifying the IP address in the configuration definition file.

  For CCI on VSP Gx00 models and VSP Fx00 models, you can create a virtual command device in GUM in a storage system by specifying the IP address of a storage system.

  By creating a virtual command device, you can execute the same script as the in-band method from a client PC which is not connected directly to a

storage system. CCI commands are transferred to the virtual command device from the client PC, and then executed in storage systems.

A virtual command device can also be created on the CCI server, which is a remote CCI installation that is connected by LAN. The location of the virtual command device depends on the type of storage system. The following table lists the storage system types and indicates the allowable locations of the virtual command device.

Storage system type	Location of virtual command device		
	SVP	GUM	CCI server[2]
VSP Gx00 models, VSP Fx00 models	OK[1]	OK	OK
VSP G1000, G1500, and VSP F1500	OK	Not allowed	OK
HUS VM	OK	Not allowed	OK
VSP	OK	Not allowed	OK

Notes:

1. CCI on the SVP must be configured as a CCI server in advance.
2. A CCI server is a remote CCI server connected via LAN.

The following figure shows a system configuration example and a setting example of a command device and a virtual command device by the in-band and out-of-band methods.

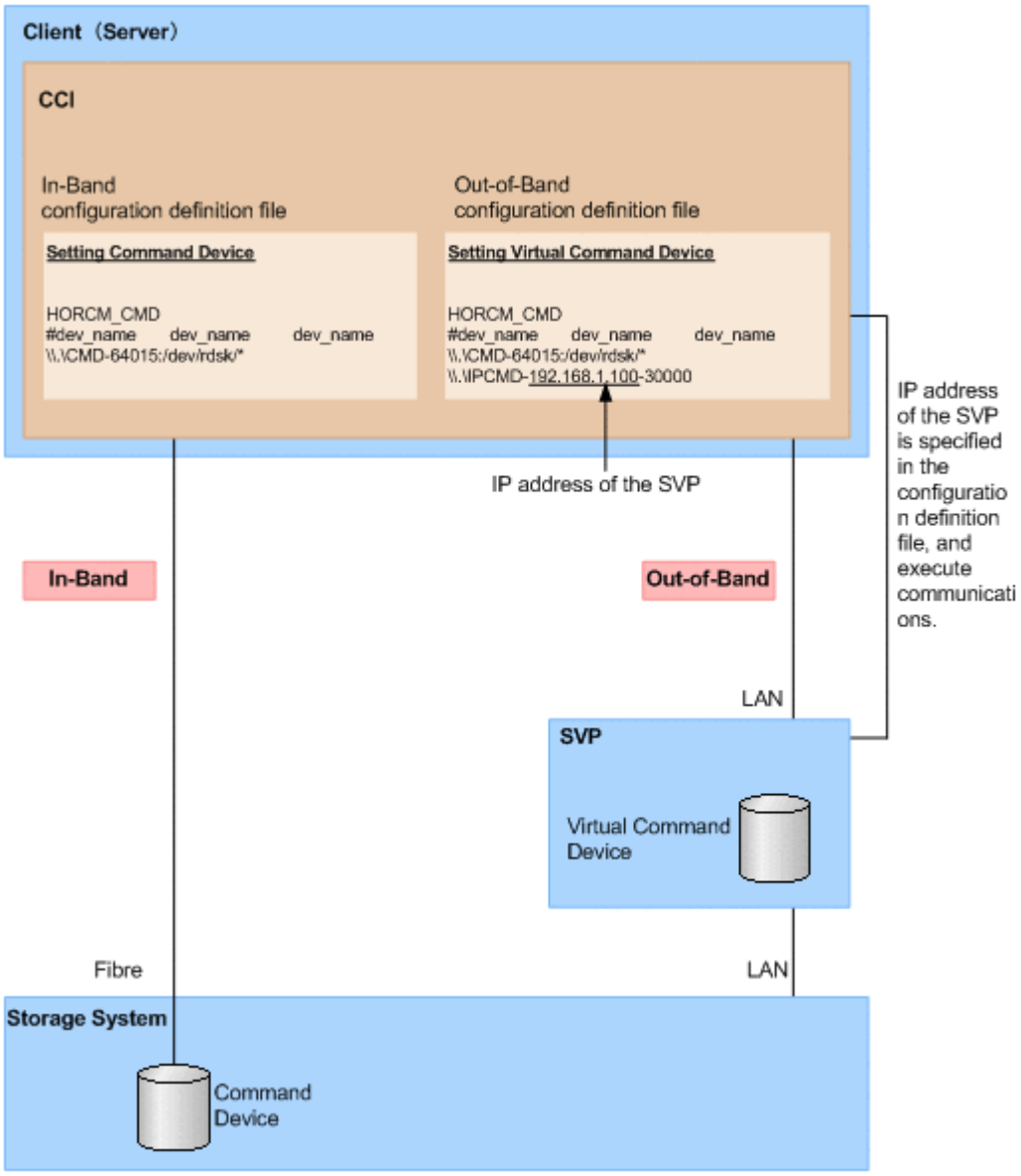

Figure 2-1 System Configuration Example and Setting Example of Command Device and Virtual Command Device by In-Band and Out-of-Band Methods (VSP G1000, G1500, and VSP F1500, VSP, HUS VM shown)

In the following figure, CCI B is the CCI server for CCI A. You can issue commands from CCI A to the storage system through the virtual command device of CCI B. You can also issue commands from CCI B directly to the storage system (without CCI A). When you issue commands directly from CCI B, CCI A is optional.

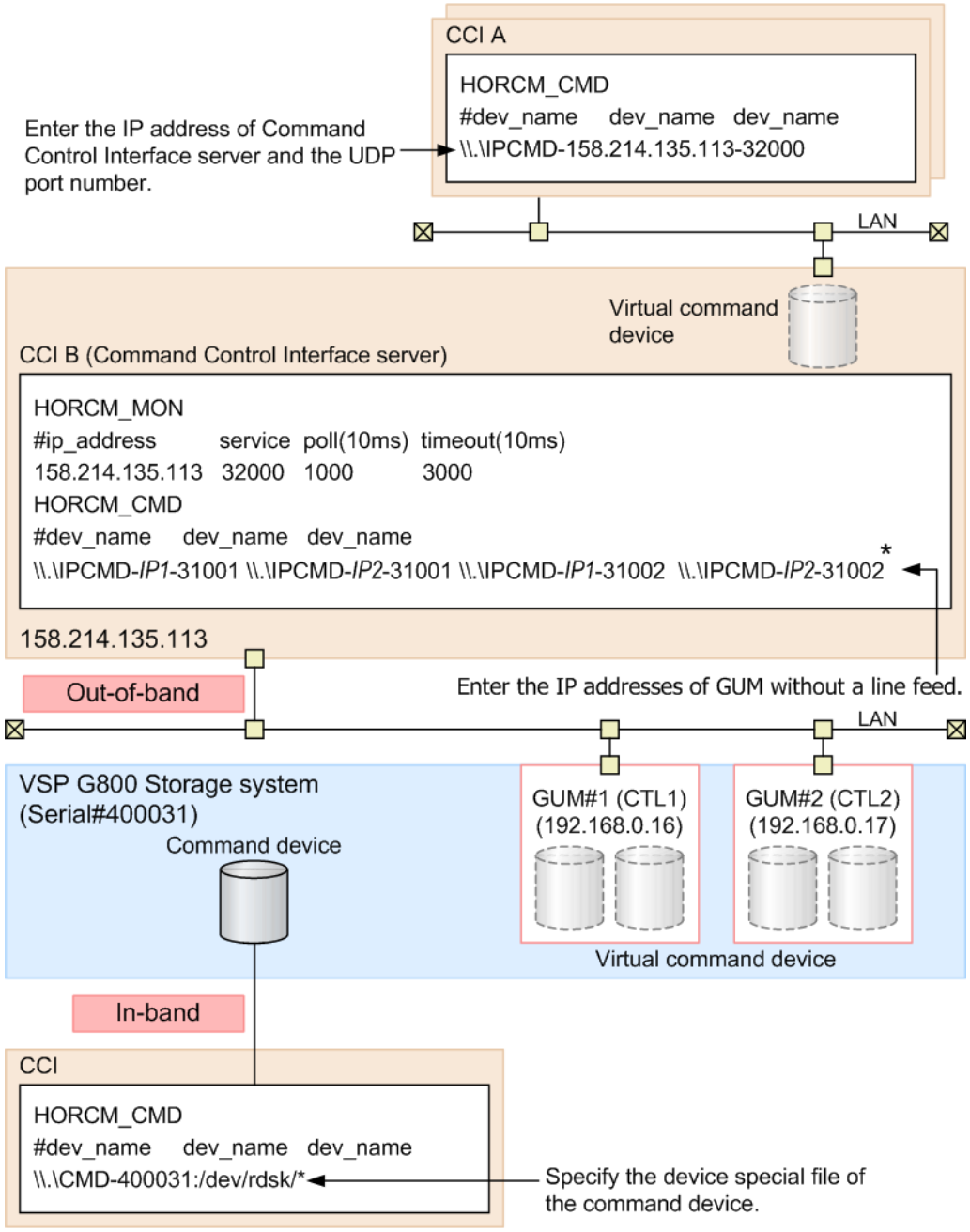

* When you write the configuration definition file, replace *IP1* with IP address of GUM#1 and *IP2* with IP address of GUM#2.

Figure 2-2 System Configuration Example and Setting Example of Command Device and Virtual Command Device by In-Band and Out-of-Band Methods (VSP Gx00 models or VSP Fx00 models)

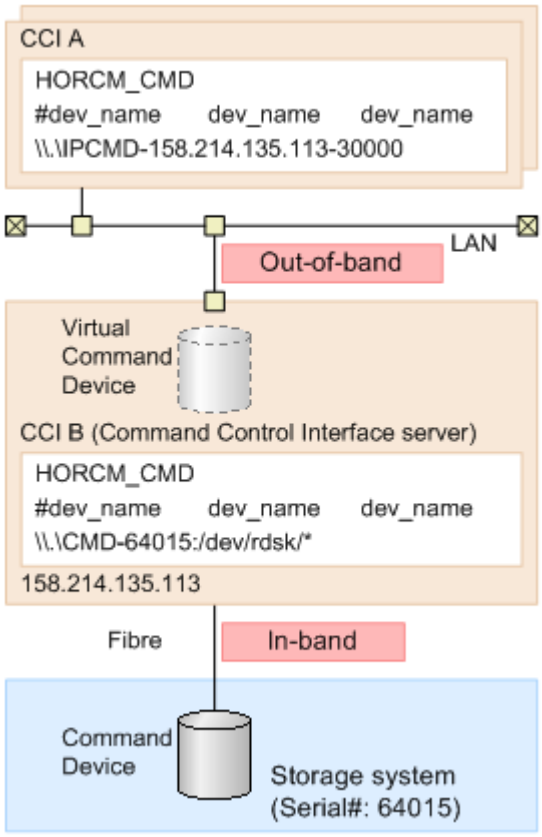

Figure 2-3 System configuration example when the CCI server is connected to the storage system by in-band

Setting up UDP ports

This section contains information about setting up strict firewalls.

If you do not have a HORCM_MON IP address in your configuration definition file, CCI (horcm) opens the following ports on horcmstart:

- For in-band or out-of-band: [31000 + horcminstance + 1]
- For out-of-band: [34000 + horcminstance + 1]

If you have a HORCM_MON IP address in your configuration definition file, you need to open up the port that is defined in this entry.

Setting the command device

For in-band CCI operations, commands are issued to the RAID storage system via the command device. The command device is a user-selected, dedicated logical volume on the storage system that functions as the interface to the CCI software on the host. The command device is dedicated to CCI operations and cannot be used by any other applications. The command device accepts read and write commands that are executed by the storage system and returns read requests to the host.

The command device can be any OPEN-V device that is accessible to the host. A LUSE volume cannot be used as a command device. The command device uses 16 MB, and the remaining volume space is reserved for CCI and its utilities. A Virtual LUN volume as small as 36 MB can be used as a command device.

First you set the command device using Hitachi Command Suite or Device Manager - Storage Navigator, and then you define the command device in the HORCM_CMD section of the configuration definition file for the CCI instance on the attached host. When you use a command for provisioning, user authentication is required. Set enable the user authentication on the security attribute of a command device.

For specifying the command device and the virtual command device, you can enter up to 511 characters on a line.

To set a command device:

1. Make sure the device that will be set as a command device does not contain any user data. Once a volume is set as a command device, it is inaccessible to the host.
2. Log on to Hitachi Command Suite or Storage Navigator, and connect to the storage system on which you want to set a command device.
3. Configure the device as needed before setting it as a command device. For example, you can create a custom-size device that has 36 MB of storage capacity for use as a command device. For instructions, see the Provisioning manual or the Virtual LUN manual for the storage system.
4. Locate and select the device, and set the device as a command device. If you want to use the CCI Data Protection Facility, also enable command device security at this time. For instructions, see the Provisioning manual or the LUN Manager manual for the storage system. For information about the Protection Facility, see the *Command Control Interface User and Reference Guide*.
5. Write down the system raw device name (character-type device file name) of the command device (for example, /dev/rdsk/c0t0d1s2 in Solaris, \\.\CMD-Ser#-ldev#-Port# in Windows). You will need this information when you define the command device in the configuration definition file.
6. To set an alternate command device, repeat this procedure for another volume. For details about alternate command devices, see About alternate command devices on page 2-16.



Note:

- For Solaris operations, the command device must be labeled.
- To enable dual pathing of the command device under Solaris systems, include all paths to the command device on a single line in the HORCM_CMD section of the configuration definition file. Example 2-1 Example of dual path for command device for Solaris systems on page 2-15 shows an example with two controller paths (c1 and c2) to the command device. Putting the path information on separate lines might

cause parsing issues, and failover might not occur unless the HORCM startup script is restarted on the Solaris system.

```
HORCM_CMD
#dev_name dev_name dev_name
/dev/rdsk/c1t66d36s2 /dev/rdsk/c2t66d36s2
```

Example 2-1 Example of dual path for command device for Solaris systems

Setting the command device and virtual command device

For executing a command by the in-band method, set an LU path in a configuration definition file and create a command device. The command device in the storage system specified by the LU path accepts the command from the client, and executes the operation instruction.

Meanwhile, for executing a command by the out-of-band method, create a virtual command device. The virtual command device creates an IP address of the SVP, a UDP communication port number (fixed at 31001), and a storage system unit number in the configuration definition file.

By creating the virtual command device, transfer the command from the client or the server via LAN to the virtual command device of the set IP address in the SVP, and assign an operation instruction to the storage system.

A setting example of a command device and a virtual command device (by the in-band and out-of-band methods) in a configuration definition file is shown below. For details, see the *Command Control Interface User and Reference Guide*.

```
HORCM_CMD
#dev_name                          dev_name          dev_name
\\.\CMD-64015:/dev/rdsk/*
```

Example 2-2 Setting Example of Command Device in Configuration Definition File (in-band method)

Example for SVP IP address 192.168.1.100 and UDP communication port number 31001:

```
HORCM_CMD
#dev_name                          dev_name          dev_name
\\.\IPCMD-192.168.1.100-31001
```

Example 2-3 Setting Example of Virtual Command Device in Configuration Definition File (out-of-band method)

Example for GUM IP addresses 192.168.0.16, 192.168.0.17 and UDP communication port numbers 31001, 31002. In this case, enter the IP addresses without line feed.

```
HORCM_CMD
#dev_name                          dev_name          dev_name
\\.\IPCMD-192.168.0.16-31001 \\.\IPCMD-192.168.0.17-31001 \\.
\IPCMD-192.168.0.16-31002 \\.\IPCMD-192.168.0.17-31002
```

Example 2-4 Setting Example of Virtual Command Device in Configuration Definition File (out-of-band method)

About alternate command devices

If CCI receives an error notification in reply to a read or write request to a command device, the CCI software can switch to an alternate command device, if one is defined. If a command device is unavailable (for example, blocked due to online maintenance), you can switch to an alternate command device manually. If no alternate command device is defined or available, all commands terminate abnormally, and the host cannot issue CCI commands to the storage system. To ensure that CCI operations continue when a command device becomes unavailable, you should set one or more alternate command devices.

Because the use of alternate I/O pathing depends on the platform, restrictions are placed upon it. For example, on HP-UX systems only devices subject to the LVM can use the alternate path PV-LINK. To prevent command device failure, CCI supports an alternate command device function.

- **Definition of alternate command devices.** To use an alternate command device, define two or more command devices for the HORCM_CMD item in the configuration definition file. When two or more devices are defined, they are recognized as alternate command devices. If an alternate command device is not defined in the configuration definition file, CCI cannot switch to the alternate command device.
- **Timing of alternate command devices.** When the HORCM receives an error notification in reply from the operating system via the raw I/O interface, the command device is alternated. It is possible to alternate the command device forcibly by issuing an alternating command provided by TrueCopy (horcctl -C).
- **Operation of alternating command.** If the command device is blocked due to online maintenance (for example, microcode replacement), the alternating command should be issued in advance. When the alternating command is issued again after completion of the online maintenance, the previous command device is activated again.
- **Multiple command devices on HORCM startup.** If at least one command device is available during one or more the command devices that was described to the configuration definition file, then HORCM starts with a warning message to startup log by using available command device. The user needs to confirm that all command devices can be changed by using horcctl -C command option, or HORCM has been started without warning message to the HORCM start up log.

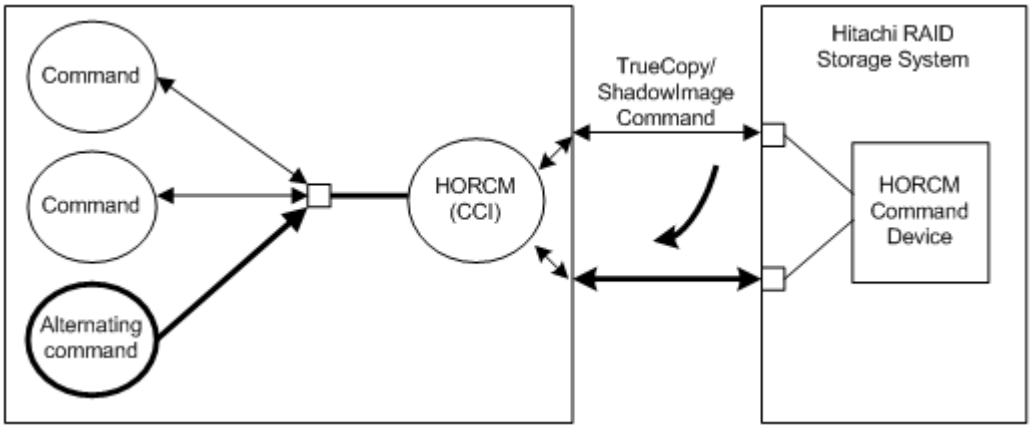

Figure 2-4 Alternate Command Device Function

Creating/editing the configuration definition file

The configuration definition file is a text file that is created and edited using any standard text editor (for example, UNIX vi editor, Windows Notepad). The configuration definition file defines correspondences between the server and the volumes used by the server. There is a configuration definition file for each host server. When the CCI software starts up, it refers to the definitions in the configuration definition file.

The configuration definition file defines the devices in copy pairs and is used for host management of the copy pairs, including ShadowImage, ShadowImage for Mainframe, TrueCopy, TrueCopy for Mainframe, Copy-on-Write Snapshot, Thin Image, Universal Replicator, and Universal Replicator for Mainframe. ShadowImage, ShadowImage for Mainframe, Copy-on-Write Snapshot, and Thin Image use the same configuration files and commands, and the RAID storage system determines the type of copy pair based on the S-VOL characteristics and (for Copy-on-Write Snapshot and Thin Image) the pool type.

The configuration definition file contains the following sections:

- **HORCM_MON:** Defines information about the local host.
- **HORCM_CMD:** Defines information about the command (CMD) devices.
- **HORCM_VCMD:** Defines information about the virtual storage machine.
- **HORCM_DEV or HORCM_LDEV:** Defines information about the copy pairs.
- **HORM_INST or INSTP:** Defines information about the remote host.
- **HORCM_LDEVG:** Defines information about the device group.
- **HORCM_ALLOW_INST:** Defines information about user permissions.

A sample configuration definition file, HORCM_CONF (/HORCM/etc/horcm.conf), is included with the CCI software. This file should be used as the basis for creating your configuration definition files. The system administrator should make a copy of the sample file, set the necessary parameters in the copied file, and place the file in the proper directory.

The following table lists the parameters defined in the configuration file and specifies the default value, type, and limit for each parameter. For details about parameters in the configuration file, see the manual *Command Control Interface User and Reference Guide*. See Sample configuration definition files on page B-2 for detailed descriptions of configuration definition files for sample CCI configurations.

Table 2-1 Configuration (HORCM_CONF) parameters

Parameter	Default	Type	Limit
ip_address	None	Character string	64 characters
Service	None	Character string or numeric value	15 characters
poll (10 ms)	1000	Numeric value*	None
timeout (10 ms)	3000	Numeric value*	None
dev_name for HORCM_DEV	None	Character string	31 characters
dev_group	None	Character string	31 characters Recommended value = 8 char. or less
port #	None	Character string	31 characters
target ID	None	Numeric value*	7 characters
LU#	None	Numeric value*	7 characters
MU#	0	Numeric value*	7 characters
Serial#	None	Numeric value*	12 characters
CU:LDEV(LDEV#)	None	Numeric value	6 characters
dev_name for HORCM_CMD	None	Character string	63 characters Recommended value = 8 char. or less
*Use decimal notation (not hexadecimal) for these numeric values.			

Note:

- Do not edit the configuration definition file while CCI is running. Shut down CCI, edit the configuration file as needed, and then restart CCI. When you change the system configuration, it is required to shut down CCI once and rewrite the configuration definition file to match with the change and then restart CCI. When you change the storage system configuration (microprogram, cache capacity, LU path, and so on), you must restart CCI regardless of the necessity of the configuration definition file editing. When you restart CCI, confirm that there is no contradiction in the connection configuration by using the "-c" option of the **`pairdisplay`** command and the **`raidqry`** command. However, you cannot confirm the consistency of the P-VOL and S-VOL capacity with the "-c" option of **`pairdisplay`** command. Confirm the capacity of each volume by using the `raidcom` command.

- Do not mix pairs created with the "At-Time Split" option (-m grp) and pairs created without this option in the same group defined in the CCI configuration file. If you do, a pairsplit operation might end abnormally, or S-VOLs of the P-VOLs in the same consistency group (CTG) might not be created correctly at the time the pairsplit request is received.



Note: If the hardware configuration is changed during the time an OS is running in Linux, the name of a special file corresponding to the command device might be changed. At this time, if HORCM was started by specifying the special file name in the configuration definition file, HORCM cannot detect the command device, and the communication with the storage system might fail.
To prevent this failure, specify the path name allocated by udev to the configuration definition file before booting HORCM. Use the following procedure to specify the path name. In this example, the path name for `/dev/sdgh` can be found.

1. Find the special file name of the command device by using `inqraid` command. Command example:
   ```
   [root@myhost ~]# ls /dev/sd* | /HORCM/usr/bin/inqraid -CLI |
   grep CM sda CL1-B 30095 0 - - 0000 A:00000 OPEN-V-CM sdgh CL1-
   A 30095 0 - - 0000 A:00000 OPEN-V-CM [root@myhost ~]#
   ```
2. Find the path name from the `by-path` directory. Command example:
   ```
   [root@myhost ~]# ls -l /dev/disk/by-path/ | grep sdgh
   lrwxrwxrwx. 1 root root 10 Jun 11 17:04 2015 pci-0000:08:00.0-
   fc-0x50060e8010311940-lun-0 -> ../../sdgh [root@myhost ~]#
   ```
   In this example, "pci-0000:08:00.0-fc-0x50060e8010311940-lun-0" is the path name.
3. Enter the path name to HORCM_CMD in the configuration definition file as follows.
   ```
   HORCM_CMD /dev/disk/by-path/pci-0000:08:00.0-
   fc-0x50060e8010311940-lun-0
   ```
4. Boot the HORCM instance as usual.

3

Upgrading CCI

For upgrading the CCI software, use the RMuninst scripts on the media for the program product.

For other media, please use the instructions in this chapter to upgrade the CCI software. The instructions might be different on your platform. Please consult your operating system documentation (for example, UNIX man pages) for platform-specific command information.

- Upgrading CCI in a UNIX environment
- Upgrading CCI in a Windows environment
- Upgrading CCI in an OpenVMS environment
- Upgrading CCI on a PC with the VSP Gx00 models storage management software

Upgrading CCI in a UNIX environment

Use the RMinstsh script on the media for the program product to upgrade the CCI software to a later version.

For other media, use the following instructions to upgrade the CCI software to a later version. The following instructions refer to UNIX commands that might be different on your platform. Please consult your operating system documentation (for example, UNIX man pages) for platform-specific command information.

To update the CCI software version on a UNIX system:

1. Confirm that HORCM is not running. If it is running, shut it down:

   One CCI instance: # horcmshutdown.sh Two CCI instances: # horcmshutdown.sh 0 1

   If CCI commands are running in the interactive mode, terminate the interactive mode and exit these commands using -q option.
2. Insert the installation media into the proper I/O device. Use the RMinstsh (RMINSTSH) under `./program/RM` directory on the CD for the installation. For LINUX/IA64 and LINUX/X64, execute `../../RMinstsh` after moving to LINUX/IA64 or LINUX/X64 directory.
3. Move to the directory containing the HORCM directory (for example, # cd / for the root directory).
4. Copy all files from the installation media using the cpio command: `# cpio -idmu < /dev/XXXX`

   where XXXX = I/O device

   Preserve the directory structure (d flag) and file modification times (m flag), and copy unconditionally (u flag). For floppy disks, load them sequentially, and repeat the command. An input/output device name of floppy disk designates a surface partition of the raw device file (unpartitioned raw device file).
5. Execute the CCI installation command: `# /HORCM/horcminstall.sh`
6. Verify installation of the proper version using the raidqry command:

   ```
   # raidqry -h
   Model: RAID-Manager/HP-UX
   Ver&Rev: 01-29-03/05
   Usage: raidqry [options]
   ```
7. Changing the CCI user: see Changing the CCI user (UNIX systems) on page 2-4 to ensure that the CCI user is appropriately set for the upgraded/installed files.

Upgrading CCI in a Windows environment



Caution: When you upgrade the CCI software, the sample script file is overwritten. If you have edited the sample script file and want to keep the changes, first back up the edited sample script file, and then upgrade the CCI software. After the upgrade installation, restore the data of the sample script

file using the backup file. For details about the sample script file, see the *CCI Command Control Interface User and Reference Guide*.

To update the CCI software version on a Windows system:

1. You can upgrade the CCI software only when CCI is not running. If CCI is running, shut down CCI using the **horcmshutdown** command to ensure a normal end to all functions.
2. On the Control panel select **Add or Remove Programs**.
3. When the Add/Remove Program Properties window opens, select **RAID Manager for WindowsNT** from the program products list.
4. Click **Remove** to remove the CCI software.
5. Insert the installation media for the program product into the proper I/O device.
6. Execute Setup.exe (\program\RM\WIN_NT\RMHORC\Setup.exe or \program\RM\WIN_NT\RMHORC_X64\Setup.exe on the CD) and follow the instructions on the screen to complete the installation. The installation directory is HORCM (fixed value) at the root directory.
7. In the InstallShield window, follow the instructions on screen to install the CCI software.
8. Reboot the Windows server, and verify that the correct version of the CCI software is running on your system by executing the `raidqry -h` command. Example:

   ```
   C:\HORCM\etc>raidqry -h
   Model  : RAID-Manager/WindowsNT
   Ver&Rev: 01-30-03/xx
   Usage  : raidqry [options] for HORC
   ```

9. Changing the CCI user: see Changing the CCI user (Windows systems) on page 2-6 to ensure that the CCI user is appropriately set for the upgraded/installed files.

Upgrading CCI in an OpenVMS environment

To update the CCI software version on an OpenVMS system:

1. You can upgrade the CCI software only when CCI is not running. If CCI is running, shut down CCI using the **horcmshutdown** command to ensure a normal end to all functions:

   $horcmshutdown for one HORCM instance $horcmshutdown 0 1 for two HORCM instances

   When a command is being used in interactive mode, terminate it using the "-q" option.
2. Insert and mount the provided installation media.
3. Execute the following command:

   ```
   $ PRODUCT INSTALL RM /source=Device:[PROGRAM.RM.OVMS]/LOG
                  Device:[PROGRAM.RM.OVMS] where HITACH-ARMVMS-RM-
   V0122-2-1.PCSI exists
   ```

4. Verify installation of the proper version using the raidqry command:

```
$ raidqry -h
Model: RAID-Manager/OpenVMS
Ver&Rev: 01-29-03/05
Usage: raidqry [options]
```

5. Follow the requirements and restrictions in Porting notice for OpenVMS on page 1-17.

Upgrading CCI on a PC with the VSP Gx00 models storage management software

This section describes how to upgrade CCI in an environment in which CCI is installed by the procedure described in Installing CCI on a PC with the VSP Gx00 models storage management software on page 2-9.

Note: If you installed CCI in a drive where the storage management software for VSP Gx00 models is not installed, remove CCI first, and then install it again in the drive where the storage management software is installed. For the installation procedure, see Installing CCI on a PC with the VSP Gx00 models storage management software on page 2-9.

1. Right-click `<storage-management-software-installation-path> \wk \supervisor\restapi\uninstall.bat` to run as administrator.
2. Perform the procedure described in Upgrading CCI in a Windows environment on page 3-2. Select the drive where the storage management software is installed.
3. Right-click `<storage-management-software-installation-path>\wk \supervisor\restapi\install.bat` to run as administrator.

4

Removing CCI

This chapter describes and provides instructions for removing the CCI software.

- Removing CCI in a UNIX environment
- Removing CCI in a Windows environment
- Removing CCI in an OpenVMS environment
- Removing CCI on a PC with the VSP Gx00 models storage management software
- Removing the CCI components

Removing CCI in a UNIX environment

To remove the CCI software:

1. If you are discontinuing local or remote copy functions (for example, ShadowImage, TrueCopy), delete all volume pairs and wait until the volumes are in simplex status.

   If you will continue copy operations using Hitachi Command Suite or Storage Navigator, do not delete any volume pairs.
2. You can remove the CCI software only when CCI is not running. If CCI is running, shut down CCI using the **horcmshutdown.sh** command to ensure a normal end to all functions:

   One CCI instance: `# horcmshutdown.sh` Two CCI instances: `# horcmshutdown.sh 0 1`

   If CCI commands are running in the interactive mode, terminate the interactive mode and exit these commands using **-q** option.
3. Use the `RMuninst` script on the installation media for the program product to remove the CCI software.

If you do not have the installation media for the program product, you can remove the CCI software manually as follows:

1. When HORCM is installed in the root directory (/HORCM is not a symbolic link) (see Example 4-1 Uninstalling the CCI Software from a Root Directory on page 4-2):
   a. Execute the horcmuninstall command: `# /HORCM/horcmuninstall.sh`
   b. Move to the root directory: `# cd /`
   c. Delete the product using the rm command: `# rm -rf /HORCM`
2. When HORCM is not installed in the root directory (/HORCM is a symbolic link) (see Example 4-2 Uninstalling the CCI Software from a Non-Root Directory on page 4-2):
   a. Execute the horcmuninstall command: `# HORCM/horcmuninstall.sh`
   b. Move to the root directory: `# cd /`
   c. Delete the symbolic link for /HORCM: `# rm /HORCM`
   d. Delete the product using the rm command: `# rm -rf /Directory/HORCM`

```
#/HORCM/horcmuninstall.sh          -> Issue the uninstall command.
#cd  /                             -> Change directories.
#rm -rf /HORCM                     -> Delete the CCI directory.
```

Example 4-1 Uninstalling the CCI Software from a Root Directory

```
#/HORCM/horcmuninstall.sh           -> Issue the uninstall command.
#cd /                               -> Change directories.
#rm /HORCM                          -> Delete the CCI link.
#rm -rf /non-root_directory_name/HORCM ->Delete the CCI directory.
```

Example 4-2 Uninstalling the CCI Software from a Non-Root Directory

Removing CCI in a Windows environment

To remove the CCI software on a Windows system:

1. If you are discontinuing local and/or remote copy functions (for example, ShadowImage, TrueCopy), delete all volume pairs and wait until the volumes are in simplex status. If you will continue copy operations using Hitachi Command Suite or Storage Navigator, do not delete any volume pairs.
2. You can remove the CCI software only when CCI is not running. If CCI software is running, shut down CCI using the **horcmshutdown** command to ensure a normal end to all functions:

   One CCI instance: **D:\HORCM\etc> horcmshutdown** Two CCI instances: **D:\HORCM\etc> horcmshutdown 0 1**
3. Delete the CCI software using the **Add or Remove Programs** control panel:

   a. Open the Control Panel, and double-click **Add or Remove Programs**.

   b. On the **Add or Remove Programs** dialog, select **RAID Manager for WindowsNT** in the program list, and click **Remove**.

Removing CCI in an OpenVMS environment

To remove the CCI software on an OpenVMS system:

1. If you are discontinuing local and/or remote copy functions (for example, ShadowImage, TrueCopy), delete all volume pairs and wait until the volumes are in simplex status. If you will continue copy operations using Hitachi Command Suite or Storage Navigator, do not delete any volume pairs.
2. You can remove the CCI software only when CCI is not running. If CCI software is running, shut down CCI using the **horcmshutdown** command to ensure a normal end to all functions:

   For one instance: **$ horcmshutdown** For two instances: **$ horcmshutdown 0 1**

   If a command is being used in interactive mode, terminate it using the **-q** option.
3. Delete the installed CCI software by using the following command:

   $ PRODUCT REMOVE RM /LOG

Removing CCI on a PC with the VSP Gx00 models storage management software

This section describes how to remove CCI in an environment in which CCI is installed by the procedure described in Installing CCI on a PC with the VSP Gx00 models storage management software on page 2-9.

1. Right-click `<storage-management-software-installation-path> \wk \supervisor\restapi\uninstall.bat` to run as administrator.
2. Perform the procedure described in Removing CCI in a Windows environment on page 4-3.
3. Perform the procedure described in the sections for upgrading the storage management software, the SVP software, and the firmware of the applicable hardware installation guides for VSP Gx00 models listed below.
   - *Hitachi Virtual Storage Platform G800 Hardware Installation Guide*, *Hitachi Virtual Storage Platform F800 Hardware Reference Guide*
   - *Hitachi Virtual Storage Platform G400, G600 Hardware Installation Guide*, *Hitachi Virtual Storage Platform F400, F600 Hardware Reference Guide*, *Hitachi Virtual Storage Platform G400, G600 Hardware Reference Guide*
   - *Hitachi Virtual Storage Platform G200 Hardware Reference Guide*

Removing the CCI components

After removing the CCI software, perform the following tasks to remove the remaining CCI components:

1. Release command device security using Hitachi LUN Manager.
2. Delete the command devices using Hitachi LUN Manager.

You can now configure the volumes that were used as command devices for operations from the connected hosts.

5

Troubleshooting

This chapter provides troubleshooting information for CCI.

- Troubleshooting

Troubleshooting

If you have a problem installing or upgrading the CCI software, make sure that all system requirements and restrictions have been met. If you need to call Hitachi Data Systems customer support, please provide as much information about the problem as possible, including:

- The circumstances surrounding the error or failure.
- The content of any error messages displayed on the host systems.
- The content of any error messages displayed by Device Manager - Storage Navigator.
- The Device Manager - Storage Navigator configuration information (use the Dump Tool).
- The service information messages (SIMs), including reference codes and severity levels, displayed by Device Manager - Storage Navigator.

The Hitachi Data Systems customer support staff is available 24 hours a day, seven days a week. If you need technical support, log on to Hitachi Data Systems Support Connect for contact information: https://support.hds.com/en_us/contact-us.html.

A

Fibre-to-SCSI address conversion

Disks connected with fibre channel display as SCSI disks on UNIX hosts. Disks connected with fibre channel connections can be fully utilized. CCI converts fibre-channel physical addresses to SCSI target IDs (TIDs) using a conversion table (see Figure A-1 Example Fibre Address Conversion on page A-2). Table A-1 Limits for Target IDs and LUNs on page A-2 shows the current limits for SCSI TIDs and LUNs on various operating systems.

- Fibre/FCoE-to-SCSI address conversion
- LUN configurations on the RAID storage systems
- Fibre address conversion tables

Fibre/FCoE-to-SCSI address conversion

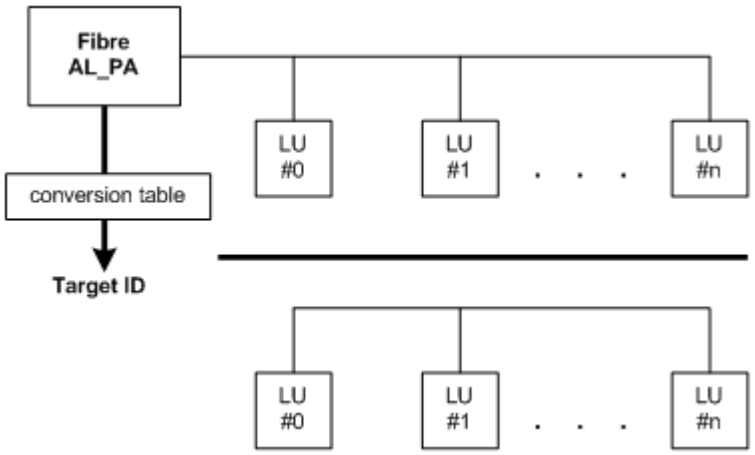

Figure A-1 Example Fibre Address Conversion

For iSCSI, the AL_PA is the fixed value 0xFE.

Table A-1 Limits for Target IDs and LUNs

-	HP-UX, other Systems		Solaris, IRIX Systems		Windows Systems	
Port	**TID**	**LUN**	**TID**	**LUN**	**TID**	**LUN**
Fibre	0 to 15	0 to 1023	0 to 125	0 to 1023	0 to 31	0 to 1023
SCSI	0 to 15	0 to 7	0 to 15	0 to 7	0 to 15	0 to 7

Conversion table for Windows. The conversion table for Windows is based on conversion by an Emulex driver. If the fibre-channel adapter is different (for example, Qlogic, HPE), the target ID that is indicated by the **raidscan** command might be different from the target ID on the Windows host.

Example A-1 Using Raidscan to Display TID and LUN for Fibre-Channel Devices on page A-3 shows an example of using the **raidscan** command to display the TID and LUN of Harddisk6 (HP driver). You must start HORCM without the descriptions of HORCM_DEV or HORCM_INST in the configuration definition file because of the unknown TIDs and LUNs.

```
C:\>raidscan -pd hd6 -x drivescan hd6
Harddisk 6... Port[ 2] PhId[ 4] TId[ 3] Lun[  5] [HITACHI     ]
[OPEN-3         ]
              Port[CL1-J] Ser#[   30053] LDEV#[  14(0x00E)]
              HORC = SMPL  HOMRCF[MU#0 = SMPL MU#1 = SMPL MU#2 =
SMPL]
              RAID5[Group  1- 2] SSID = 0x0004
PORT# /ALPA/C,TID#,LU#.Num(LDEV#....)...P/S, Status,Fence,LDEV#,P-
Seq#,P-LDEV#
CL1-J /  e2/4,  29,  0.1(9).............SMPL  ----  ------ ----,
-----  ----
CL1-J /  e2/4,  29,  1.1(10)............SMPL  ----  ------ ----,
-----  ----
CL1-J /  e2/4,  29,  2.1(11)............SMPL  ----  ------ ----,
-----  ----
CL1-J /  e2/4,  29,  3.1(12)............SMPL  ----  ------ ----,
```

```
-----  ----
CL1-J /  e2/4,  29,  4.1(13).....SMPL  ----  ------ ----,
-----  ----
CL1-J /  e2/4,  29,  5.1(14).....SMPL  ----  ------ ----,
-----  ----
CL1-J /  e2/4,  29,  6.1(15).....SMPL  ----  ------ ----,
-----  ----
Specified device is LDEV# 0014
```

Example A-1 Using Raidscan to Display TID and LUN for Fibre-Channel Devices

In this case, the target ID indicated by the **raidscan** command must be used in the configuration definition file. This can be accomplished using either of the following two methods:

- Using default conversion table. Use the TID# and LU# indicated by the **raidscan** command in the HORCM configuration definition file (TID=29 LUN=5 in Example A-1 Using Raidscan to Display TID and LUN for Fibre-Channel Devices on page A-3).
- Changing default conversion table. Change the default conversion table using the HORCMFCTBL environmental variable (see Example A-2 Using HORCMFCTBL to Change the Default Fibre Conversion Table on page A-4) (TID=3 LUN=5 in Example A-2 Using HORCMFCTBL to Change the Default Fibre Conversion Table on page A-4).

```
C:\> set HORCMFCTBL=X                          → 'X' is fibre
conversion table number.
C:\> horcmstart ...                            → Start of HORCM.
:
:
Result of "set HORCMFCTBL=X" command:
C:\>raidscan -pd hd6 -x drivescan hd6
Harddisk 6... Port[ 2] PhId[ 4] TId[ 3] Lun[  5] [HITACHI     ]
[OPEN-3         ]
              Port[CL1-J] Ser#[   30053] LDEV#[  14(0x00E)]
              HORC = SMPL  HOMRCF[MU#0 = SMPL MU#1 = SMPL MU#2 =
SMPL]
              RAID5[Group  1- 2] SSID = 0x0004
PORT# /ALPA/C,TID#,LU#.Num(LDEV#....)...P/S,Status,Fence,LDEV#,P-
Seq#,P-LDEV#
CL1-J /  e2/0,   3,  0.1(9).....SMPL  ----  ------ ----,
-----  ----
CL1-J /  e2/0,   3,  1.1(10).....SMPL  ----  ------ ----,
-----  ----
CL1-J /  e2/0,   3,  2.1(11).....SMPL  ----  ------ ----,
-----  ----
CL1-J /  e2/0,   3,  3.1(12).....SMPL  ----  ------ ----,
-----  ----
CL1-J /  e2/0,   3,  4.1(13).....SMPL  ----  ------ ----,
-----  ----
CL1-J /  e2/0,   3,  5.1(14).....SMPL  ----  ------ ----,
-----  ----
CL1-J /  e2/0,   3,  6.1(15).....SMPL  ----  ------ ----,
```

```
-----  ----
Specified device is LDEV# 0014
```

Example A-2 Using HORCMFCTBL to Change the Default Fibre Conversion Table

LUN configurations on the RAID storage systems

The RAID storage systems (9900V and later) manage the LUN configuration on a port through the LUN security as shown in the following figure.

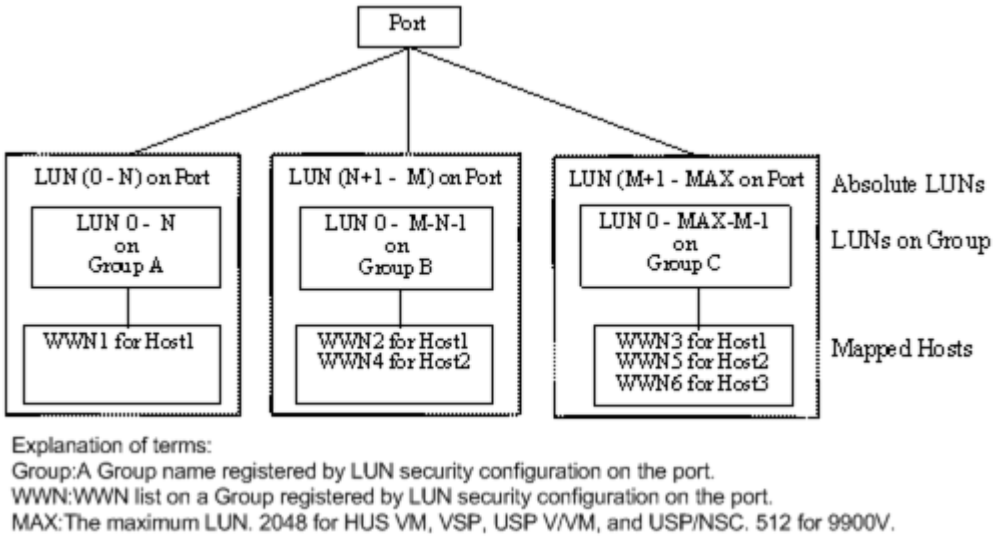

Figure A-2 LUN Configuration

CCI uses absolute LUNs to scan a port, whereas the LUNs on a group are mapped for the host system so that the target ID & LUN, which is indicated by the **raidscan** command, is different from the target ID & LUN shown by the host system. In this case, the target ID & LUN indicated by the **raidscan** command should be used.

In this case, you must start HORCM without a description for HORCM_DEV and HORCM_INST because target ID & LUN are unknown. Use the port, target ID, and LUN displayed by the raidscan -find or raidscan -find conf command for HORCM_DEV (see Example A-3 Displaying the Port, TID, and LUN Using raidscan on page A-4).

For details on LUN discovery based on a host group, see Host Group Control in the *Command Control Interface User and Reference Guide*.

```
# ls /dev/rdsk/* | raidscan -find
DEVICE_FILE     UID  S/F PORT   TARG  LUN    SERIAL  LDEV  PRODUCT_ID
/dev/rdsk/c0t0d4  0    S  CL1-M     0    4     31168   216  OPEN-3-
CVS-CM
/dev/rdsk/c0t0d1  0    S  CL1-M     0    1     31168   117  OPEN-3-CVS
/dev/rdsk/c1t0d1  -    -  CL1-M     -    -     31170   121  OPEN-3-CVS
```

Example A-3 Displaying the Port, TID, and LUN Using raidscan

UID: displays the UnitID for multiple RAID configuration. If UID appears as '-' then the command device for HORCM_CMD is not found.

S/F: displays that a PORT is SCSI or fibre.

PORT: displays the RAID storage system port number.

TARG: displays the target ID (converted by the fibre conversion table, see Fibre address conversion tables on page A-5).

LUN: displays the Logical Unit Number (converted by the fibre conversion table).

SERIAL: displays the production number (serial#) of the RAID storage system.

LDEV: displays the LDEV# within the RAID storage system.

PRODUCT_ID: displays product-id field in the STD inquiry page.

Fibre address conversion tables

Table A-2 Fibre Address Conversion Table for HP-UX Systems (Table0) on page A-6, Table A-3 Fibre Address Conversion Table for Solaris and IRIX Systems (Table1) on page A-6, Table A-4 Fibre Address Conversion Table for Windows Systems (Table2) on page A-7 and show the fibre address conversion tables:

- Table number 0 = HP-UX systems (see Table A-2 Fibre Address Conversion Table for HP-UX Systems (Table0) on page A-6)
- Table number 1 = Solaris and IRIX systems (see Table A-3 Fibre Address Conversion Table for Solaris and IRIX Systems (Table1) on page A-6)
- Table number 2 = Windows systems (see Table A-4 Fibre Address Conversion Table for Windows Systems (Table2) on page A-7)

The conversion table for Windows systems is based on the Emulex driver. If a different fibre-channel adapter is used, the target ID indicated by the raidscan command might be different than the target ID indicated by the Windows system.

Note on Table 3 for other Platforms: Table 3 is used to indicate the LUN without Target ID for unknown FC_AL conversion table or fibre-channel fabric (fibre-channel world wide name). In this case, the Target ID is always zero, thus **Table 3 is not described in this document**. Table 3 is used as the default for platforms other than those listed above. If the host will use the WWN notation for the device files, then this table number should be changed by using the $HORCMFCTBL variable.

If the TID displayed on the system is different than the TID indicated in the fibre address conversion table, you must use the TID (or LU#) returned by the raidscan command to specify the device(s).

Table A-2 Fibre Address Conversion Table for HP-UX Systems (Table0)

C0		C1		C2		C3		C4		C5		C6		C7	
AL-PA	TID	AL-PA	TID	AL-PA	TID	AL-PA	TID	AL-PA	TID	AL-PA	TID	AL-PA	TID	AL-PA	TID
EF	0	CD	0	B2	0	98	0	72	0	55	0	3A	0	25	0
E8	1	CC	1	B1	1	97	1	71	1	54	1	39	1	23	1
E4	2	CB	2	AE	2	90	2	6E	2	53	2	36	2	1F	2
E2	3	CA	3	AD	3	8F	3	6D	3	52	3	35	3	1E	3
E1	4	C9	4	AC	4	88	4	6C	4	51	4	34	4	1D	4
E0	5	C7	5	AB	5	84	5	6B	5	4E	5	33	5	1B	5
DC	6	C6	6	AA	6	82	6	6A	6	4D	6	32	6	18	6
DA	7	C5	7	A9	7	81	7	69	7	4C	7	31	7	17	7
D9	8	C3	8	A7	8	80	8	67	8	4B	8	2E	8	10	8
D6	9	BC	9	A6	9	7C	9	66	9	4A	9	2D	9	0F	9
D5	10	BA	10	A5	10	7A	10	65	10	49	10	2C	10	08	10
D4	11	B9	11	A3	11	79	11	63	11	47	11	2B	11	04	11
D3	12	B6	12	9F	12	76	12	5C	12	46	12	2A	12	02	12
D2	13	B5	13	9E	13	75	13	5A	13	45	13	29	13	01	13
D1	14	B4	14	9D	14	74	14	59	14	43	14	27	14	-	-
CE	15	B3	15	9B	15	73	15	56	15	3C	15	26	15	-	-

Table A-3 Fibre Address Conversion Table for Solaris and IRIX Systems (Table1)

C0		C1		C2		C3		C4		C5		C6		C7	
AL-PA	TID	AL-PA	TID	AL-PA	TID	AL-PA	TID	AL-PA	TID	AL-PA	TID	AL-PA	TID	AL-PA	TID
EF	0	CD	16	B2	32	98	48	72	64	55	80	3A	96	25	112
E8	1	CC	17	B1	33	97	49	71	65	54	81	39	97	23	113
E4	2	CB	18	AE	34	90	50	6E	66	53	82	36	98	1F	114
E2	3	CA	19	AD	35	8F	51	6D	67	52	83	35	99	1E	115
E1	4	C9	20	AC	36	88	52	6C	68	51	84	34	100	1D	116
E0	5	C7	21	AB	37	84	53	6B	69	4E	85	33	101	1B	117
DC	6	C6	22	AA	38	82	54	6A	70	4D	86	32	101	18	118

C0		C1		C2		C3		C4		C5		C6		C7	
AL-PA	TID	AL-PA	TID	AL-PA	TID	AL-PA	TID	AL-PA	TID	AL-PA	TID	AL-PA	TID	AL-PA	TID
DA	7	C5	23	A9	39	81	55	69	71	4C	87	31	103	17	119
D9	8	C3	24	A7	40	80	56	67	72	4B	88	2E	104	10	120
D6	9	BC	25	A6	41	7C	57	66	73	4A	89	2D	105	0F	121
D5	10	BA	26	A5	42	7A	58	65	74	49	90	2C	106	08	122
D4	11	B9	27	A3	43	79	59	63	75	47	91	2B	107	04	123
D3	12	B6	28	9F	44	76	60	5C	76	46	92	2A	108	02	124
D2	13	B5	29	9E	45	75	61	5A	77	45	93	29	109	01	125
D1	14	B4	30	9D	46	74	62	59	78	43	94	27	110	-	-
CE	15	B3	31	9B	47	73	63	56	79	3C	95	26	111	-	-

Table A-4 Fibre Address Conversion Table for Windows Systems (Table2)

C5 (PhId5)		C4 (PhId4)				C3 (PhId3)				C2 (PhId2)				C1 (PhId1)			
AL-PA	TID	AL-PA	TID	AL-PA	TID	AL-PA	TID	AL-PA	TID	AL-PA	TID	AL-PA	TID	AL-PA	TID	AL-PA	TID
-	-	-	-	CC	15	-	-	98	15	-	-	56	15	-	-	27	15
-	-	E4	30	CB	14	B1	30	97	14	72	30	55	14	3C	30	26	14
-	-	E2	29	CA	13	AE	29	90	13	71	29	54	13	3A	29	25	13
-	-	E1	28	C9	12	AD	28	8F	12	6E	28	53	12	39	28	23	12
-	-	E0	27	C7	11	AC	27	88	11	6D	27	52	11	36	27	1F	11
-	-	DC	26	C6	10	AB	26	84	10	6C	26	51	10	35	26	1E	10
-	-	DA	25	C5	9	AA	25	82	9	6B	25	4E	9	34	25	1D	9
-	-	D9	24	C3	8	A9	24	81	8	6A	24	4D	8	33	24	1B	8
-	-	D6	23	BC	7	A7	23	80	7	69	23	4C	7	32	23	18	7
-	-	D5	22	BA	6	A6	22	7C	6	67	22	4B	6	31	22	17	6
-	-	D4	21	B9	5	A5	21	7A	5	66	21	4A	5	2E	21	10	5

C5 (PhId5)		C4 (PhId4)				C3 (PhId3)				C2 (PhId2)				C1 (PhId1)			
AL-PA	TID	AL-PA	TID	AL-PA	TID	AL-PA	TID	AL-PA	TID	AL-PA	TID	AL-PA	TID	AL-PA	TID	AL-PA	TID
-	-	D3	20	B6	4	A3	20	79	4	65	20	49	4	2D	20	0F	4
-	-	D2	19	B5	3	9F	19	76	3	63	19	47	3	2C	19	08	3
-	-	D1	18	B4	2	9E	18	75	2	5C	18	46	2	2B	18	04	2
EF	1	CE	17	B3	1	9D	17	74	1	5A	17	45	1	2A	17	02	1
E8	0	CD	16	B2	0	9B	16	73	0	59	16	43	0	29	16	01	1

B

Sample configuration definition files

This chapter describes sample configuration definition files for typical CCI configurations.

- Sample configuration definition files
- Examples of CCI configurations

Sample configuration definition files

Figure B-1 Configuration Definition of Paired Volumes on page B-2 illustrates the configuration definition of paired volumes.

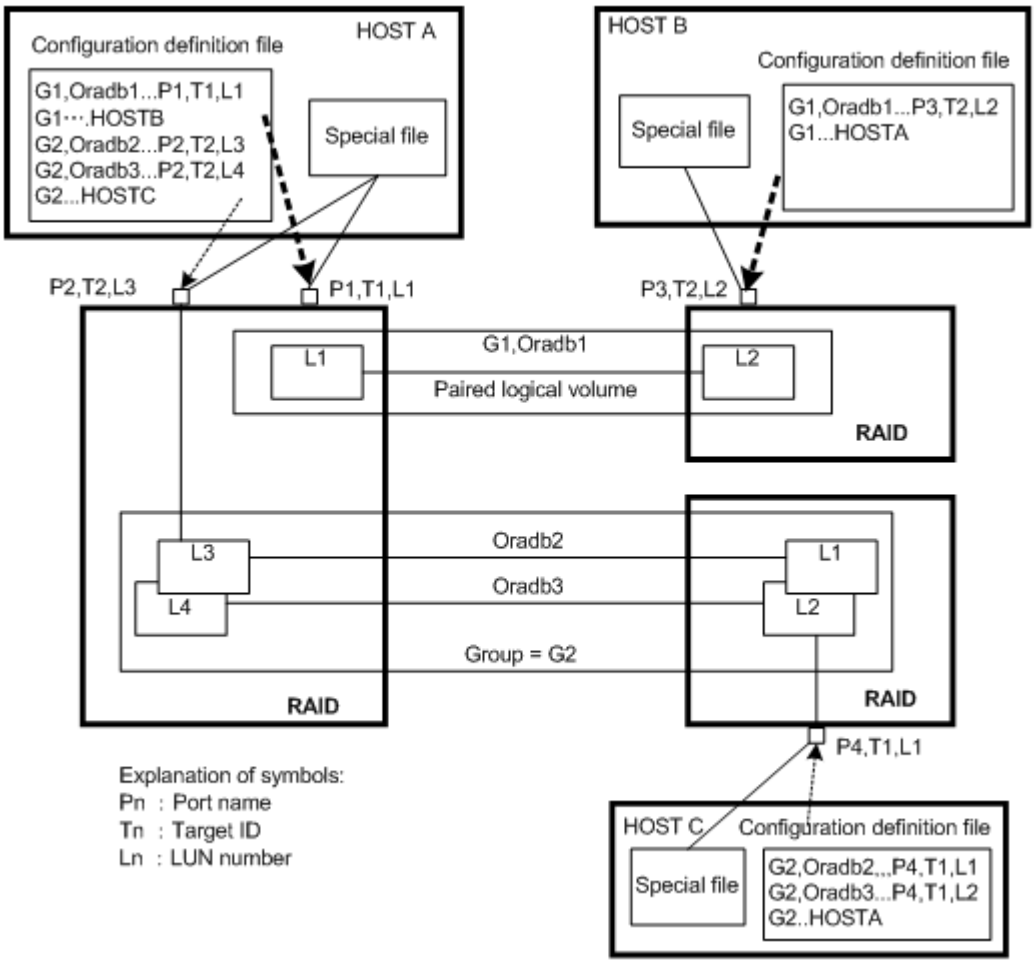

Figure B-1 Configuration Definition of Paired Volumes

The following example shows a sample configuration file for a UNIX-based operating system.

Configuration File Example – UNIX-Based Servers (# indicates a comment)

```
HORCM_MON
#ip_address    service     poll(10ms)    timeout(10ms)
HST1           horcm       1000          3000
HORCM_CMD
#unitID 0... (seq#30014)
#dev_name dev_name    dev_name
/dev/rdsk/c0t0d0
#unitID 1... (seq#30015)
#dev_name dev_name    dev_name
/dev/rdsk/c1t0d0
HORCM_DEV
#dev_group  dev_name    port#     TargetID  LU#    MU#
```

```
oradb        oradb1      CL1-A         3       1       0
oradb        oradb2      CL1-A         3       1       1
oralog       oralog1     CL1-A         5       0
oralog       oralog2     CL1-A1        5       0
oralog       oralog3     CL1-A1        5       1
oralog       oralog4     CL1-A1        5       1       h1
HORCM_INST
#dev_group   ip_address     service
oradb         HST2          horcm
oradb         HST3          horcm
oralog        HST3          horcm
```

Figure B-2 Configuration File Example – Windows Servers on page B-3 shows a sample configuration file for a Windows operating system.

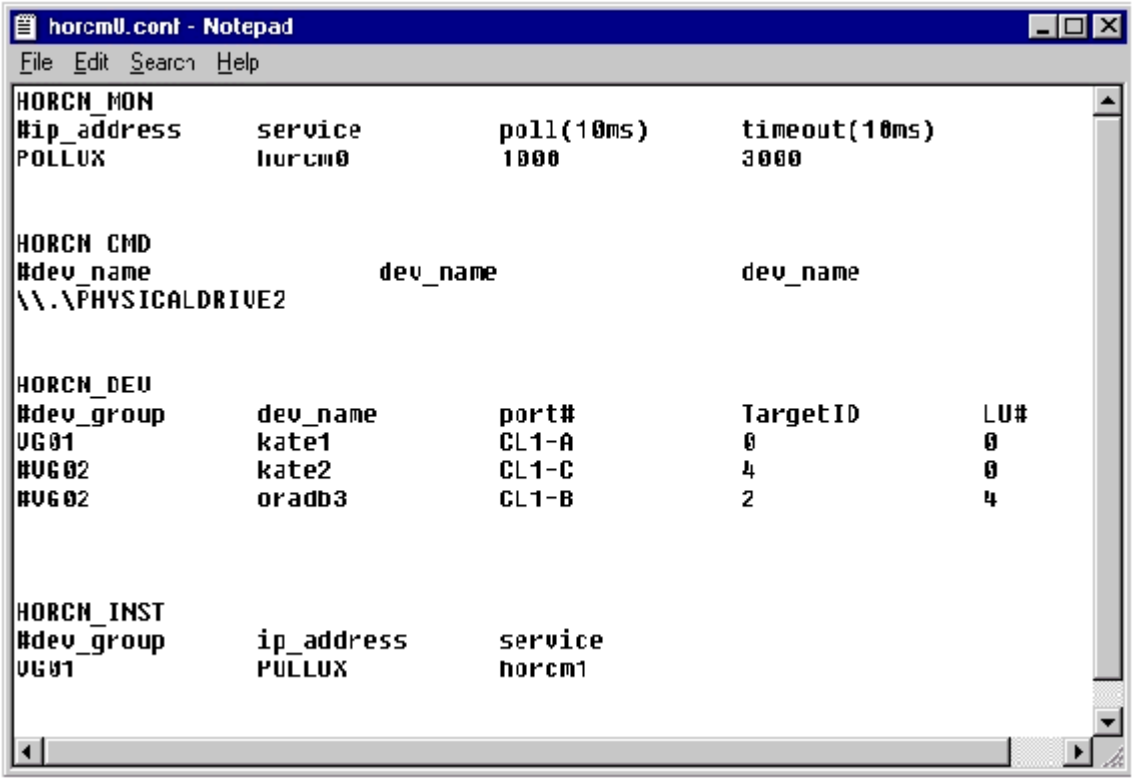

Figure B-2 Configuration File Example – Windows Servers

The configuration file sets the following parameters:

- (1) HORCM_MON on page B-4
- (2a) HORCM_CMD (in-band method) on page B-4
- (3) HORCM_VCMD on page B-10
- (4) HORCM_DEV on page B-10
- (5) HORCM_INST on page B-13
- (6) HORCM_INSTP on page B-17
- (7) HORCM_LDEV on page B-18
- (8) HORCM_LDEVG on page B-18
- (9) HORCM_ALLOW_INST on page B-19

(1) HORCM_MON

The monitor parameter (HORCM_MON) defines the following values:

- Ip_address: Specifies the local host name or the IP address of the local host. When you specify the name of a local host that has multiple IP addresses, one of the IP addresses is selected at random and used. If you want to use all IP addresses, specify NONE for IPv4 or NONE6 for IPv6.
- Service: Specifies the UDP port name assigned to the HORCM communication path, which is registered in "/etc/services" ("%windir%\system32\drivers\etc\services" in Windows, "SYS$SYSROOT:[000000.TCPIP$ETC]SERVICES.DAT" in OpenVMS). If a port number is specified instead of a port name, the port number is used.
- Poll: Specifies the interval for monitoring paired volumes in increments of 10 ms. To reduce the HORCM daemon load, make this interval longer. If set to -1, the paired volumes are not monitored. The value of -1 is specified when two or more CCI instances run on a single machine.
- Timeout: The time-out period of communication with the remote server.

  If HORCM_MON is not specified, then the following defaults are set:

  ```
  #ip_address service poll(10ms) timeout(10ms)NONE default_port
  1000 3000
  ```

  default_port:

  For none specified HORCM instance: "31000 + 0"

  For instance HORCM X : "31000 + X + 1"

(2a) HORCM_CMD (in-band method)

When using the in-band method, define the UNIX device path or Windows physical device number and specify a command device that can be accessed by CCI for HORCM_CMD. You can specify multiple command devices in HORCM_CMD to provide failover in case the original command device becomes unavailable.



Tip:

- To enhance redundancy, you can make multiple command devices available for a single storage system. This configuration is called command device alternative configuration. For this configuration, command devices are listed horizontally in a line in the configuration definition file. CMD1 and CMD2 in the following example are command devices of the same storage system:

  ```
  HORCM_CMD CMD1 CMD2
  ```

- Aside from the command device alternative configuration, to control multiple storage systems in one configuration definition file, you can list command devices of each storage system in one configuration definition file. In this case, command devices are listed vertically. CMD1 and CMD2 in the following example are command devices of different storage systems:

  ```
  HORCM_CMD CMD1 CMD2
  ```

- When you specify a command device or a virtual command device, you can enter a maximum of 511 characters for each line.

The command device must be mapped to the SCSI/fibre using LUN Manager first. The mapped command devices can be identified by the "-CM" at the end of product ID displayed by the inqraid command. The following are the examples for the inqraid command.

Example for the inqraid command (UNIX host)

```
# ls /dev/rdsk/c1t0* | /HORCM/usr/bin/inqraid -CLI -sort
DEVICE_FILE PORT SERIAL LDEV CTG H/M/12 SSID R:Group PRODUCT_ID
c1t0d0s2 CL2-E 63502 576 - - - - OPEN-V-CM
c1t0d1s2 CL2-E 63502 577 - s/s/ss 0006 1:02-01 OPEN-V -SUN
c1t0d2s2 CL2-E 63502 578 - s/s/ss 0006 1:02-01 OPEN-V -SUN
```

The command device is /dev/rdsk/c1t0d2s2.

Example for the inqraid command (Windows host)

```
D:\HORCM\etc>inqraid $Phys -CLI
\\.\PhysicalDrive1:
# Harddisk1 -> [VOL61459_449_DA7C0D92] [OPEN-3 ]
\\.\PhysicalDrive2:
# Harddisk2 -> [VOL61459_450_DA7C0D93] [OPEN-3-CM ]
```

The command device is \\.\PhysicalDrive2.

After the process of command device mapping, set HORCM_CMD of the configuration definition file as follows.

- \\.\CMD-<Serial Number>:<Device special file name>

  <Serial Number>: Sets the serial number. For VSP G1000, G1500, and VSP F1500, add a "3" at the beginning of the serial number. For example, for serial number 12345, enter 312345.

  <Device special file name>: Sets the device special file name of a command device.

Example

When the serial number, 64015 and device special file name, /dev/rdsk/*is specified:

```
HORCM_CMD
#dev_name dev_name dev_name
\\.\CMD-64015:/dev/rdsk/*
```

Caution: To enable dual path of the command device under UNIX systems, make sure to include all paths to the command device on a single line in the HORCM_CMD section of the configuration definition file. Entering path information on separate lines might cause syntax parsing issues, and failover might not occur unless the HORCM startup script is restarted on the UNIX system.

When two or more storage systems are connected, CCI identifies each storage system using unit IDs. The unit ID is assigned sequentially in the order described in HORCM_CMD of the configuration definition file. For a

command device alternative configuration, a special file for multiple command devices is written.

Caution: When storage systems are shared by two or more servers, unit IDs and serial numbers must be consistent among the servers. List serial numbers of the storage systems in HORCM_CMD of the configuration definition file in the same order. The following figure illustrates unit IDs when multiple servers share multiple storage systems.

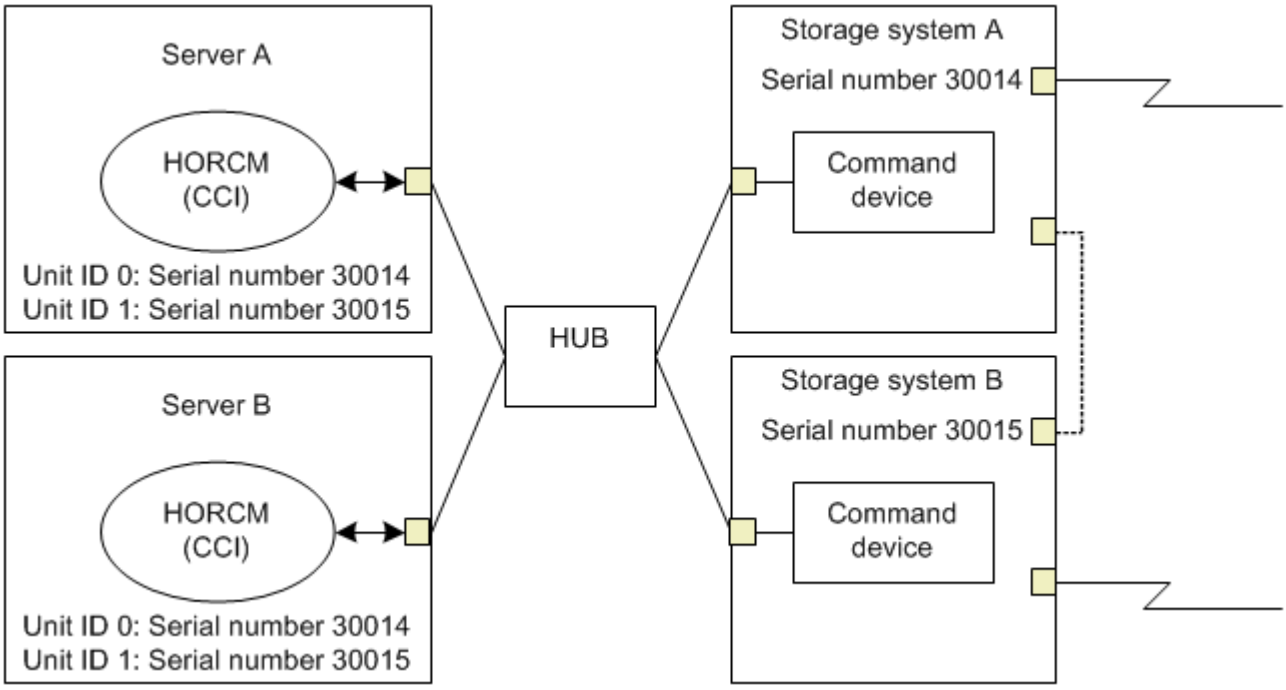

Figure B-3 Configuration and unit IDs for multiple storage systems

For Windows 2000, 2003, 2008, and 2012

Normally, physical drives are specified for command devices in storage systems. However, CCI provides a method that is not affected by changes of physical drives in Windows 2000, 2003, 2008, and 2012 by using the following naming format to specify the serial number, LDEV number, and port number in that order:

```
\\.\CMD-Ser#-ldev#-Port#
```

Note: For VSP G1000, G1500, and VSP F1500, add a "3" to the beginning of the serial number (for example, enter "312345" for serial number "12345").

The following example specifies 30095 for the storage system's serial number, 250 for the LDEV number, and CL1-A for the port number:

```
HORCM_CMD
#dev_name dev_name dev_name
\\.\CMD-30095-250-CL1-A
```

- Minimum specification
  For the command device with serial number 30095, specify as follows:
  ```
  \\.\CMD-30095
  ```

- Command devices in the multi-path environment
  Specify serial number 30095, and LDEV number 250 as follows:
  `\\.\CMD-30095-250`
- Other specifications
  Specify serial number 30095, LDEV number 250, and port number CLI-A as follows:
  `\\.\CMD-30095-250-CL1-A`
  or
  `\\.\CMD-30095-250-CL1`

For UNIX

Device files are specified for command devices in UNIX. However, CCI provides a method that is not affected by changes of device files in UNIX by using the following naming format specifying the serial number, LDEV number, and port number in that order:
`\\.\CMD-Ser#-ldev#-Port#:HINT`



Note: For VSP G1000, G1500, and VSP F1500, add a "3" to the beginning of the serial number (for example, enter "312345" for serial number "12345").

The following example specifies 30095 for the storage system's serial number, 250 for the LDEV number, and CL1-A for the port number:

```
HORCM_CMD
#dev_name dev_name dev_name
\\.\CMD-30095-250-CL1-A:/dev/rdsk/
```

HINT provides a path to scan and specifies a directory ending with a slash (/) or a name pattern including the directory. Device files are searched via a name filter similar to the inqraid command.

- To find command devices from /dev/rdsk/, enter: `' /dev/rdsk/*`
- To find command devices from /dev/rdsk/c10, enter: `' /dev/rdsk/c10*`
- To find command devices from /dev/rhdisk, enter: `' /dev/rhdisk*`

For a command device alternative configuration, HINT of the second command device can be omitted. In this case, command devices are searched from the device file that was scanned first.

```
HORCM_CMD
#dev_name dev_name dev_name
\\.\ CMD-30095-CL1:/dev/rdsk/ \\.\ CMD-30095-CL2
```

- Minimum specification
  For the command device of a storage system with serial number 30095, specify as follows:
  `\\.\CMD-30095:/dev/rdsk/`
- Command devices in the multi-path environment
  Specify storage system’s serial number 30095 and LDEV number 250 as follows:
  `\\.\CMD-30095-250:/dev/rdsk/`
- Other specifications

An alternate path with storage system's serial number 30095 and LDEV number 250 can be specified as follows:

```
\\.\CMD-30095-250-CL1:/dev/rdsk/  \\.\CMD-30095-250-CL2
\\.\CMD-30095:/dev/rdsk/c1  \\.\CMD-30095:/dev/rdsk/c2
```

For Linux

Note the following important information when using CCI on a Linux host.

Note: If the hardware configuration is changed during the time an OS is running in Linux, the name of a special file corresponding to the command device might be changed. At this time, if HORCM was started by specifying the special file name in the configuration definition file, HORCM cannot detect the command device, and the communication with the storage system might fail.
To prevent this failure, specify the path name allocated by udev to the configuration definition file before booting HORCM. Use the following procedure to specify the path name. In this example, the path name for `/dev/sdgh` can be found.

1. Find the special file name of the command device by using `inqraid` command. Command example:

   ```
   [root@myhost ~]# ls /dev/sd* | /HORCM/usr/bin/inqraid -CLI |
   grep CM sda CL1-B 30095 0 - - 0000 A:00000 OPEN-V-CM sdgh CL1-
   A 30095 0 - - 0000 A:00000 OPEN-V-CM [root@myhost ~]#
   ```

2. Find the path name from the `by-path` directory. Command example:

   ```
   [root@myhost ~]# ls -l /dev/disk/by-path/ | grep sdgh
   lrwxrwxrwx. 1 root root 10 Jun 11 17:04 2015 pci-0000:08:00.0-
   fc-0x50060e8010311940-lun-0 -> ../../sdgh [root@myhost ~]#
   ```

   In this example, "pci-0000:08:00.0-fc-0x50060e8010311940-lun-0" is the path name.

3. Enter the path name to HORCM_CMD in the configuration definition file as follows.

   ```
   HORCM_CMD /dev/disk/by-path/pci-0000:08:00.0-
   fc-0x50060e8010311940-lun-0
   ```

4. Boot the HORCM instance as usual.

(2b) HORCM_CMD (out-of-band method)

When executing commands using the out-of-band method, use a virtual command device instead of a command device. By specifying the location to create a virtual command device in HORCM_CMD, you can create a virtual command device.

The location where the virtual command device can be created is different according to the type of the storage system. For details about locations, see the section *System configuration using CCI* in the *Command Control Interface User and Reference Guide*.

Tip: When you specify a command device or a virtual command device, you can enter a maximum of 511 characters for each line.

To create a virtual command device on an SVP (VSP, HUS VM, VSP G1000, G1500, and VSP F1500)

Specify the following to HORCM_CMD of the configuration definition file.

```
\\.\IPCMD-<SVP IP address>-<UDP communication port number>[-Unit ID]
```

- <SVP IP address>: Sets an IP address of SVP.
- <UDP communication port number>: Sets the UDP communication port number. This value (31001) is fixed.
- [-Unit ID]: Sets the unit ID of the storage system for the multiple units connection configuration. This can be omitted.

To create a virtual command device on a GUM (VSP Gx00 models, VSP Fx00 models)

Specify the following to HORCM_CMD of the configuration definition file:

```
\\.\IPCMD-<GUM IP address>-<UDP communication port number>[-Unit ID]
```

- <GUM IP address>: Sets an IP address of GUM.
- <UDP communication port number>: Sets the UDP communication port number. These values (31001 and 31002) are fixed.
- [-Unit ID]: Sets the unit ID of the storage system for the multiple units connection configuration. This can be omitted.

Note: To use GUM, we recommend that you set the combination of all GUM IP addresses in the storage system and the UDP communication port numbers by an alternative configuration. See the following examples for how to set the combination.

To use a CCI server port as a virtual command device:

Specify the following in HORCM_CMD of the configuration definition file:

```
\\.\IPCMD-<CCI server IP address>-<CCI port number>[-Unit ID]
```

- `<CCI server IP address>`: Sets the IP address of the CCI server.
- `<CCI port number>`: Sets the CCI port number.
- `[-Unit ID]`: Sets the unit ID of the storage system for the multiple units connection configuration. This can be omitted.

Examples

The following expresses the case of IPv4.

```
HORCM_CMD
#dev_name dev_name dev_name
\\.\IPCMD-158.214.135.113-31001
```

The following expresses the case of IPv6.

```
HORCM_CMD
#dev_name dev_name dev_name
\\.\IPCMD-fe80::209:6bff:febe:3c17-31001
```

The following expresses the case when both the in-band and out-band methods are used:

```
HORCM_CMD
#dev_name dev_name dev_name
\\.\CMD-64015:/dev/rdsk/*  \\.\IPCMD-158.214.135.113-31001
```

The following expresses the case when both the in-band and out-band methods are used in a command device alternative configuration:

```
HORCM_CMD
#dev_name dev_name
\\.\CMD-64015:/dev/rdsk/*  \\.\IPCMD-158.214.135.113-31001
HORCM_CMD
#dev_name dev_name
\\.\IPCMD-158.214.135.113-31001  \\.\CMD-64015:/dev/rdsk/*
```

The following expresses the case of virtual command devices in a cascade configuration (three units):

```
HORCM_CMD
#dev_name dev_name dev_name
\\.\IPCMD-158.214.135.113-31001
\\.\IPCMD-158.214.135.114-31001
\\.\IPCMD-158.214.135.115-31001
```

The following expresses the case of alternative configuration of the combination of all GUM IP addresses in the storage system and the UDP communication port numbers. In this case, enter the IP address without a line feed.

```
HORCM_CMD
#dev_name dev_name dev_name
\\.\IPCMD-192.168.0.16-31001
\\.\IPCMD-192.168.0.17-31001
\\.\IPCMD-192.168.0.16-31002
\\.\IPCMD-192.168.0.17-31002
```

An IP address and a port number can be expressed using a host name and a service name.

(3) HORCM_VCMD

This parameter specifies the serial number of the virtual storage machine to be operated by this instance.

You cannot use virtual storage machines whose serial numbers are not specified in HORCM_VCMD. To use more than one virtual storage machine from a CCI instance, specify each serial number on a separate line in HORCM_VCMD. To use the virtual storage machine specified in the second line or higher of HORCM_VCMD, use the command options (for example, -s <seq#> or -u <unit id>). If you omit these command options, the first virtual storage machine specified is used. If you specify a virtual storage machine whose serial number is not specified in HORCM_VCMD using the command option (-s <seq#> or -u <Unit ID>), the EX_ENOUNT error occurs.

(4) HORCM_DEV

The device parameter (HORCM_DEV) defines the RAID storage system device addresses for the paired logical volume names. When the server is connected to two or more storage systems, the unit ID is expressed by port number extension. Each group name is a unique name discriminated by a server

which uses the volumes, the data attributes of the volumes (such as database data, log file, UNIX file), recovery level, and so on. The group and paired logical volume names described in this item must reside in the remote server. The hardware SCSI/fibre port, target ID, and LUN as hardware components need not be the same.

The following values are defined in the HORCM_DEV parameter:

- dev_group: Names a group of paired logical volumes. A command is executed for all corresponding volumes according to this group name.
- dev_name: Names the paired logical volume within a group (i.e., name of the special file or unique logical volume). The name of paired logical volume must be different than the "dev name" on another group.
- Port#: Defines the RAID storage system port number of the volume that corresponds with the dev_name volume. The following "n" shows unit ID when the server is connected to two or more storage systems (for example, CL1-A1 = CL1-A in unit ID 1). If the "n" option is omitted, the unit ID is 0. The port is not case sensitive (for example, CL1-A= cl1-a= CL1-a= cl1-A).

Port	Basic				Option				Option				Option			
CL1	An	Bn	Cn	Dn	En	Fn	Gn	Hn	Jn	Kn	Ln	Mn	Nn	Pn	Qn	Rn
CL2	An	Bn	Cn	Dn	En	Fn	Gn	Hn	Jn	Kn	Ln	Mn	Nn	Pn	Qn	Rn

The following ports can only be specified for the 9900V:

Port	Basic				Option				Option				Option			
CL3	an	bn	cn	dn	en	fn	gn	hn	jn	kn	ln	mn	nn	pn	qn	rn
CL4	an	bn	cn	dn	en	fn	gn	hn	jn	kn	ln	mn	nn	pn	qn	rn

For 9900V, CCI supports four types of port names for host groups:

- Specifying the port name without a host group:
  CL1-A**n** where **n** : unit ID for multiple RAID storage systems
- Specifying the port with a host group:
  CL1-A-**g** where **g** : host group
  CL1-A**n**-**g** where **n**-**g** : host group=**g** on CL1-A in unit ID=**n**

The following ports can only be specified for TagmaStore USP/TagmaStore NSC and USP V/VM:

Port	Basic				Option				Option				Option			
CL5	an	bn	cn	dn	en	fn	gn	hn	jn	kn	ln	mn	nn	pn	qn	rn
CL6	an	bn	cn	dn	en	fn	gn	hn	jn	kn	ln	mn	nn	pn	qn	rn
CL7	an	bn	cn	dn	en	fn	gn	hn	jn	kn	ln	mn	nn	pn	qn	rn
CL8	an	bn	cn	dn	en	fn	gn	hn	jn	kn	ln	mn	nn	pn	qn	rn

Port	Basic				Option				Option				Option			
CL9	an	bn	cn	dn	en	fn	gn	hn	jn	kn	ln	mn	nn	pn	qn	rn
CLA	an	bn	cn	dn	en	fn	gn	hn	jn	kn	ln	mn	nn	pn	qn	rn
CLB	an	bn	cn	dn	en	fn	gn	hn	jn	kn	ln	mn	nn	pn	qn	rn
CLC	an	bn	cn	dn	en	fn	gn	hn	jn	kn	ln	mn	nn	pn	qn	rn
CLD	an	bn	cn	dn	en	fn	gn	hn	jn	kn	ln	mn	nn	pn	qn	rn
CLE	an	bn	cn	dn	en	fn	gn	hn	jn	kn	ln	mn	nn	pn	qn	rn
CLF	an	bn	cn	dn	en	fn	gn	hn	jn	kn	ln	mn	nn	pn	qn	rn
CLG	an	bn	cn	dn	en	fn	gn	hn	jn	kn	ln	mn	nn	pn	qn	rn

- Target ID: Defines the SCSI/fibre target ID number of the physical volume on the specified port. See Fibre/FCoE-to-SCSI address conversion on page A-2 for further information about fibre address conversion.
- LU#: Defines the SCSI/fibre logical unit number (LU#) of the physical volume on the specified target ID and port.

For fibre channel, if the TID and LU# displayed on the system are different from the TID on the fibre address conversion table, then use the TID and LU# indicated by the **raidscan** command in the CCI configuration file.

- MU# for ShadowImage/Copy-on-Write Snapshot: Defines the mirror unit number (0 - 2) if using redundant mirror for the identical LU on ShadowImage. If this number is omitted it is assumed to be zero (0). The cascaded mirroring of the S-VOL is expressed as virtual volumes using the mirror descriptors (MU#1-2) in the configuration definition file. The MU#0 of a mirror descriptor is used for connection of the S-VOL. The mirror descriptor (MU#0-2) can be used on ShadowImage and Copy-on-Write Snapshot. MU#3-63 can be used only on Copy-on-Write Snapshot.

Note: When you enter the MU number for a ShadowImage/Copy-on-Write Snapshot pair into the configuration definition file, enter only the number, for example, "0" or "1".

Feature	SMPL		P-VOL		S-VOL	
	MU#0-2	MU#3-63	MU#0-2	MU#3-63	MU#0	MU#1-63
ShadowImage	Valid	Not valid	Valid	Not valid	Valid	Not valid
Copy-on-Write Snapshot	Valid	Valid	Valid	Valid	Valid	Not valid

- MU# for TrueCopy/Universal Replicator/global-active device: Defines the mirror unit number (0 - 3) if using redundant mirror for the identical LU on TC/UR/GAD. If this number is omitted, it is assumed to be (MU#0). You can specify only MU#0 for TrueCopy, and 4 MU numbers (MU#0 - 3) for Universal Replicator and global-active device.

Note: When you enter the MU number for a TC/UR/GAD pair into the configuration definition file, add an "h" before the number, for example, "h0" or "h1".

State/ Feature	SMPL		P-VOL		S-VOL	
	MU#0	MU#1 - 3	MU#0	MU#1 - 3	MU#0	MU#1 - 3
TrueCopy	Valid	Not valid	Valid	Not valid	Valid	Not valid
Universal Replicator/ global-active device	Valid	Valid	Valid	Valid	Valid	Valid

(5) HORCM_INST

The instance parameter (HORCM_INST) defines the network address (IP address) of the remote server (active or standby). It is used to refer to or change the status of the paired volume in the remote server (active or standby). When the primary volume is shared by two or more servers, there are two or more remote servers using the secondary volume. Thus, it is necessary to describe the addresses of all of these servers.

The following values are defined in the HORCM_INST parameter:

- dev_group: The server name described in dev_group of HORC_DEV.
- ip_address: The network address of the specified remote server.
- service: The port name assigned to the HORCM communication path (registered in the `/etc/services` file). If a port number is specified instead of a port name, the port number is used.

A configuration for multiple networks can be found using `raidqry -r <group>` command option on each host. The current network address of HORCM can be changed using `horcctl -NC <group>` on each host.

When you use all IP addresses of the local host in the configuration for multiple networks, specify NONE (IPv4) or NONE6 (IPv6) as the ip_address of HORCM_MON parameter.

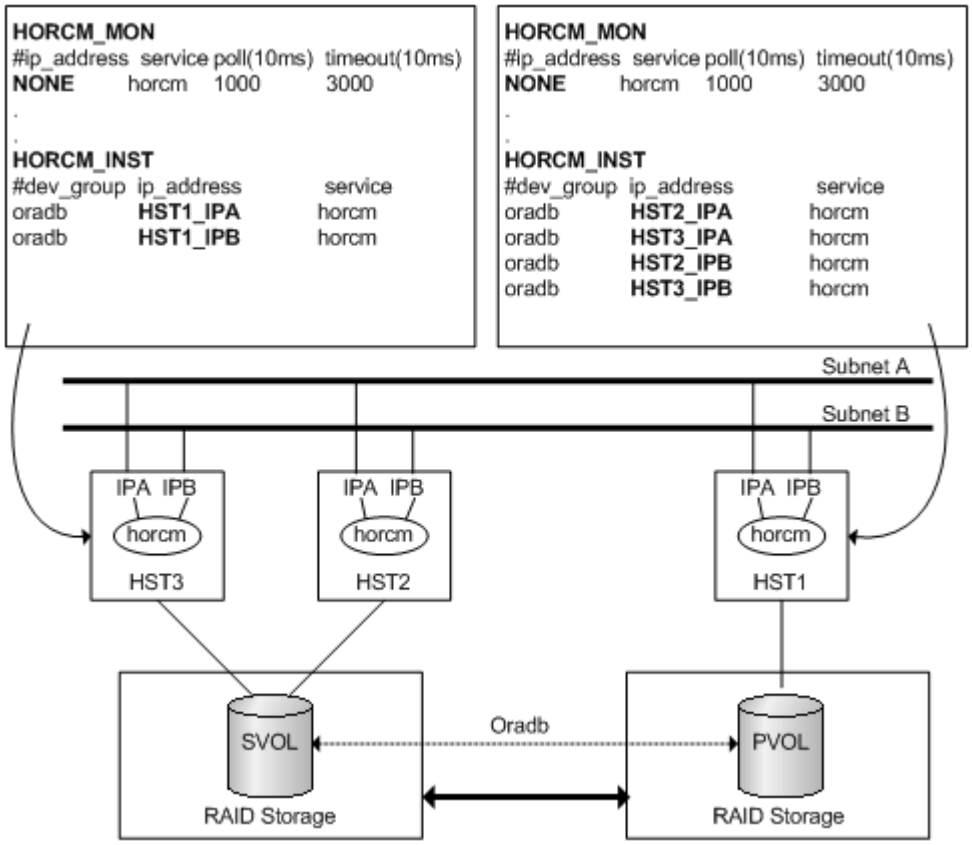

Figure B-4 Configuration for Multiple Networks

For example:

```
# horcctl -ND -g IP46G
Current network address = 158.214.135.106,services = 50060# horcctl -
NC -g IP46G
Changed network address(158.214.135.106,50060 ->
fe80::39e7:7667:9897:2142,50060)
```

For IPv6 only, the configuration must be defined as HORCM/IPv6.

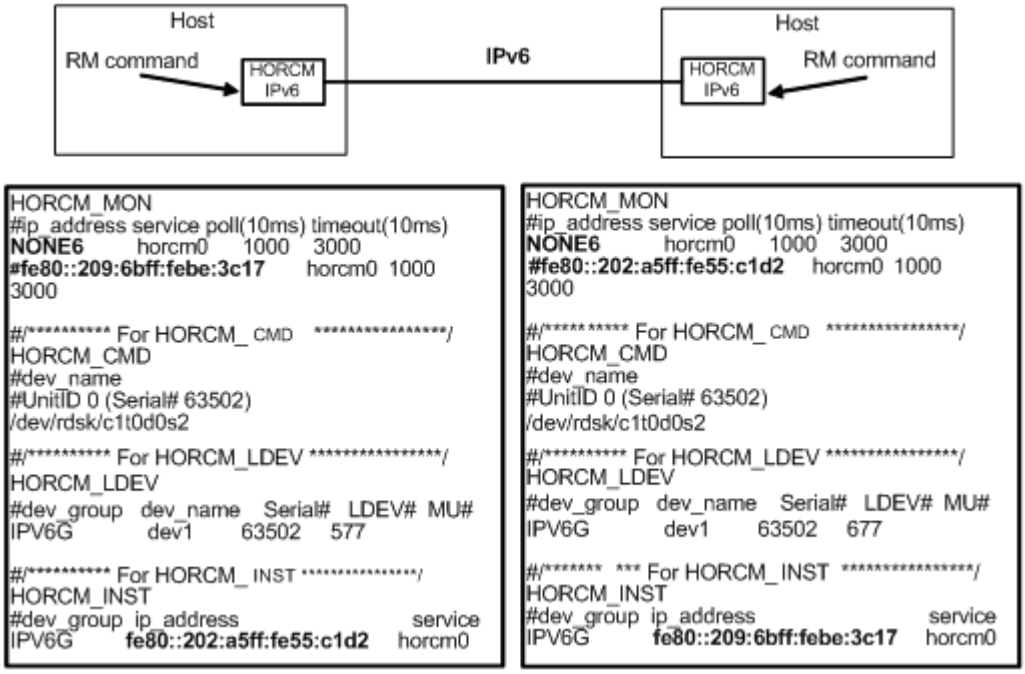

Figure B-5 Network Configuration for IPv6

It is possible to communicate between HORCM/IPv4 and HORCM/IPv6 using IPv4 mapped to IPv6.

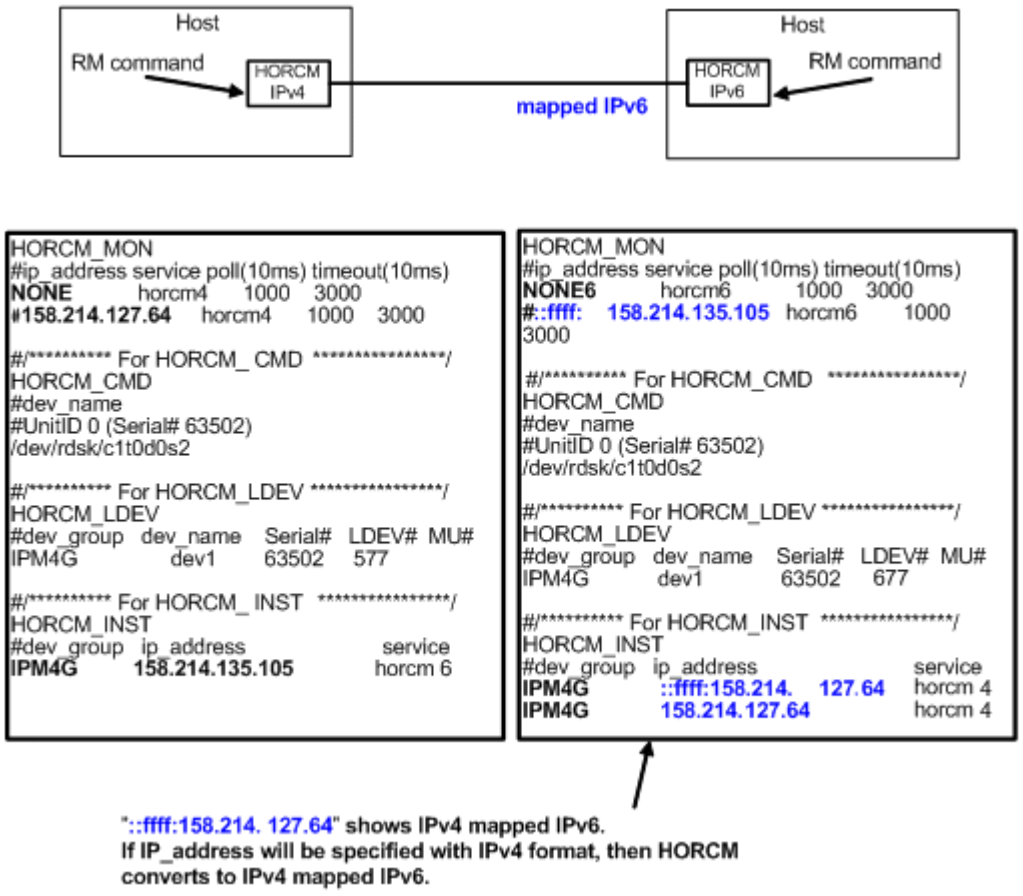

Figure B-6 Network Configuration for IPv4 Mapped IPv6

In the case of mixed IPv4 and IPv6, it is possible to communicate between HORCM/IPv4 and HORCM/IPv6 and HORCM/IPv6 using IPv4 mapped to IPv6 and native IPv6.

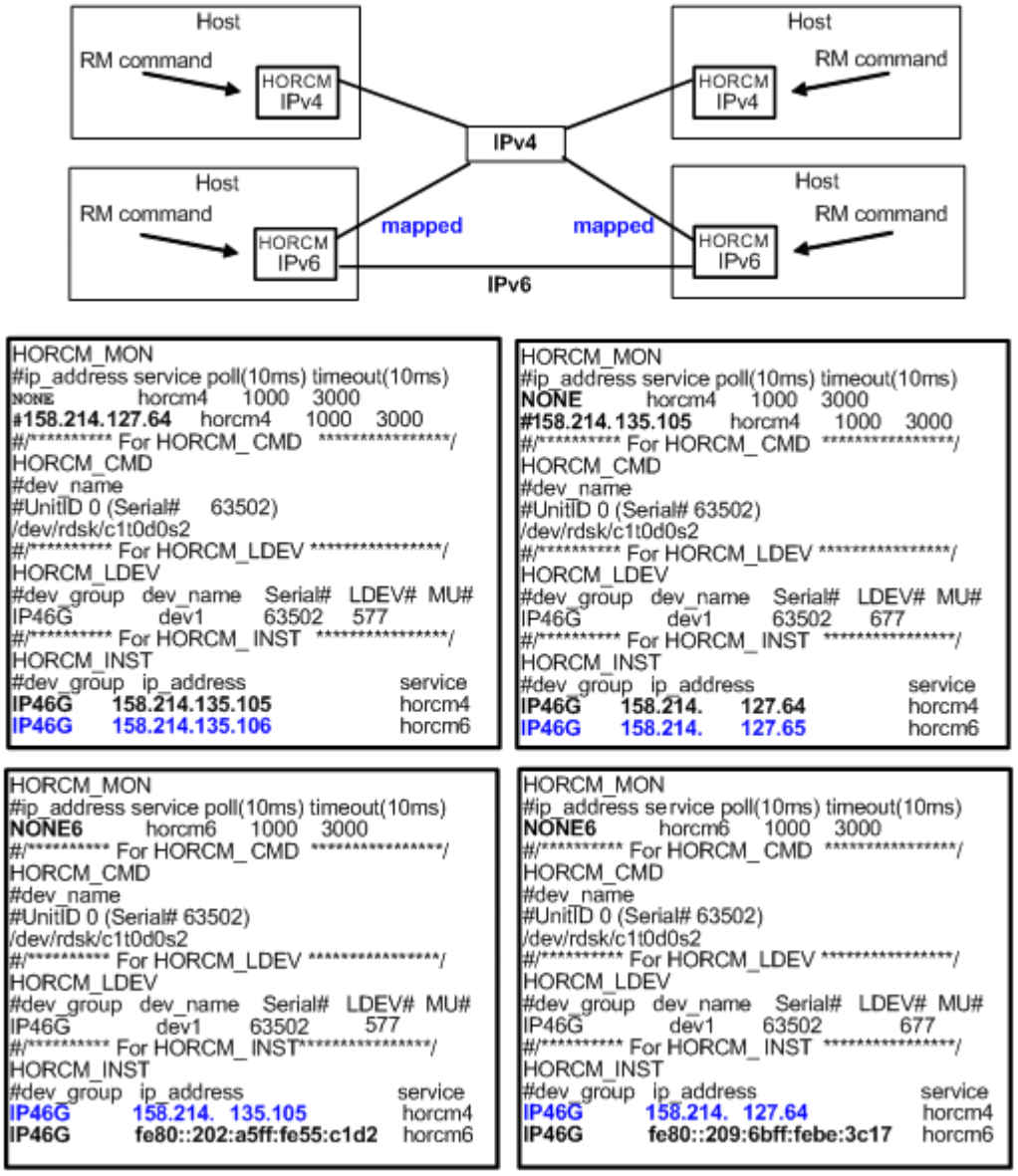

Figure B-7 Network Configuration for Mixed IPv4 and IPv6

(6) HORCM_INSTP

This parameter is used to specify "pathID" for TrueCopy, Universal Replicator, and global-active device link as well as "HORCM_INST". PathID must be specified from 1 to 255. If you do not specify the PathID, the behavior is the same as when 'HORCM_INST' is used.

```
HORCM_INSTP
dev_group          ip_address       service    pathID
VG01               HSTA             horcm      1
VG02               HSTA             horcm      2
```

Note: The path ID can be specified at TrueCopy, Universal Replicator, Universal Replicator for Mainframe, and global-active device. However, the path ID cannot be specified at UR/URz when connecting TagmaStore USP/

TagmaStore NSC or USP V/VM. The same path ID must be specified between the site of P-VOL and S-VOL because the path ID is used at the paircreate command.

(7) HORCM_LDEV

The HORCM_LDEV parameter is used for specifying stable LDEV# and Serial# as the physical volumes corresponding to the paired logical volume names. Each group name is unique and typically has a name fitting its use (for example, database data, Redo log file, UNIX file). The group and paired logical volume names described in this item must also be known to the remote server.

- dev_group: This parameter is the same as HORCM_DEV parameter.
- dev_name: This parameter is the same as HORCM_DEV parameter.
- MU#: This parameter is the same as HORCM_DEV parameter.
- Serial#: This parameter is used to describe the Serial number of RAID box. For VSP G1000, G1500, and VSP F1500, add a "3" at the beginning of the serial number (for example, enter "312345" (6 digits) for VSP G1000, G1500, and VSP F1500 serial number 12345).
- CU:LDEV(LDEV#): This parameter is used to describe the LDEV number in the RAID storage system and supports three types of format as LDEV#.

```
#dev_group    dev_name     Serial#         CU:LDEV(LDEV#)    MU#
     oradb    dev1         30095           02:40               0
     oradb    dev2         30095           02:41               0
```

  - Specifying "CU:LDEV" in hex. Example for LDEV# 260

    01: 04
  - Specifying "LDEV" in decimal used by the inqraid command of CCI. Example for LDEV# 260

    260
  - Specifying "LDEV" in hex used by the inqraid command of CCI. Example for LDEV# 260

    0x104

(8) HORCM_LDEVG

The HORCM_LDEVG parameter defines the device group information that the CCI instance reads. For details about device group, see the *Command Control Interface User and Reference Guide*.

The following values are defined.

- Copy group: specifies a name of copy group. This is equivalent to the dev_group of HORCM_DEV and HORCM_LDEV parameters.

  CCI operates by using the information defined here.
- ldev_group: Specifies a name of device group that the CCI instance reads.
- Serial#: Specifies the storage system serial number. For VSP G1000, G1500, and VSP F1500, add a "3" at the beginning of the serial number

(for example, enter "312345" (6 digits) for VSP G1000, G1500, and VSP F1500 serial number 12345).

```
HORCM_LDEVG
#Copy_Group  ldev_group  Serial#
ora          grp1        64034
```

(9) HORCM_ALLOW_INST

This parameter is used to restrict the users using the virtual command device. The following IP addresses and port numbers are allowed:

For IPv4:

```
HORCM_ALLOW_INST
#ip_address      service
158.214.135.113  34000
158.214.135.114  34000
```

For IPv6:

```
HORCM_ALLOW_INST
#ip_address                service
fe80::209:6bff:febe:3c17   34000
```

`service` in the above example means the initiator port number of HORCM.

If CCI clients not defined HORCM_ALLOW_INST, HORCM instance starting up is rejected by SCSI check condition (SKEY=0x05, ASX=0xfe) and CCI cannot be started up.

Examples of CCI configurations

The following examples show CCI configurations, the configuration definition file(s) for each configuration, and examples of CCI command use for each configuration.

The command device is defined using the system raw device name (character-type device file name). For example, the command devices for the following figure would be:

- HP-UX:

  ```
  HORCM_CMD of HOSTA = /dev/rdsk/c0t0d1
  HORCM_CMD of HOSTB = /dev/rdsk/c1t0d1
  ```

- Solaris:

  ```
  HORCM_CMD of HOSTA = /dev/rdsk/c0t0d1s2
  HORCM_CMD of HOSTB = /dev/rdsk/c1t0d1s2
  ```

  For Solaris operations with CCI version 01-09-03/04 and higher, the command device does not need to be labeled during format command.

- AIX:

  ```
  HORCM_CMD of HOSTA = /dev/rhdiskXX
  HORCM_CMD of HOSTB = /dev/rhdiskXX
  ```

  where XX = device number assigned by AIX

- Tru64 UNIX:

```
HORCM_CMD of HOSTA = /dev/rrzbXXc
HORCM_CMD of HOSTB = /dev/rrzbXXc
```

where XX = device number assigned by Tru64 UNIX

- Windows:

```
HORCM_CMD of HOSTA = \\.\CMD-Ser#-ldev#-Port#
HORCM_CMD of HOSTB = \\.\CMD-Ser#-ldev#-Port#
```

- Linux, z/Linux:

```
HORCM_CMD of HOSTA = /dev/sdX
HORCM_CMD of HOSTB = /dev/sdX
```

where X = device number assigned by Linux, z/Linux

- IRIX:

```
HORCM_CMD for HOSTA/dev/rdsk/dks0d0l1vol    or /dev/rdsk/
node_wwn/lun1vol/c0p0
HORCM_CMD for HOSTB/dev/rdsk/dks1d0l1vol    or /dev/rdsk/
node_wwn/lun1vol/c1p0
```

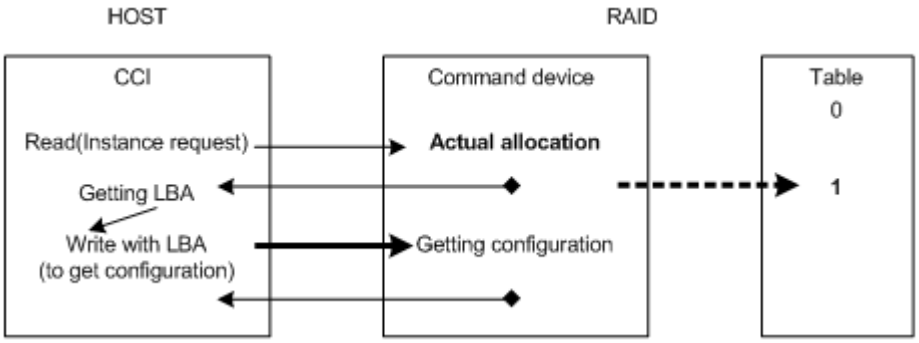

Figure B-8 TrueCopy Remote Configuration Example

Example of CCI commands with HOSTA:

- Designate a group name (Oradb) and a local host P-VOL a case.

```
# paircreate  -g Oradb  -f never  -vl
```

This command creates pairs for all LUs assigned to group Oradb in the configuration definition file (two pairs for the configuration in the above figure).

- Designate a volume name (oradev1) and a local host P-VOL a case.

```
# paircreate  -g Oradb  -d oradev1  -f never  -vl
```

This command creates pairs for all LUs designated as oradev1 in the configuration definition file (CL1-A,T1,L1 and CL1-D,T2,L1 for the configuration in the above figure).

- Designate a group name and display pair status.

```
# pairdisplay  -g Oradb
Group  PairVol(L/R)  (P,T#,L#),   Seq#,  LDEV#..P/S,  Status,
Fence, Seq#, P-LDEV# M
oradb  oradev1(L)   (CL1-A, 1,1) 30053  18...P-VOL   COPY
NEVER, 30054  19     -
oradb  oradev1(R)   (CL1-D, 2,1) 30054  19...S-VOL   COPY
NEVER, -----  18     -
```

```
oradb  oradev2(L)   (CL1-A, 1,2) 30053  20...P-VOL   COPY
NEVER, 30054  21     -
oradb  oradev2(R)   (CL1-D, 2,2) 30054  21...S-VOL   COPY
NEVER , ----- 20     -
```

Example of CCI commands with HOSTB:

- Designate a group name and a remote host P-VOL a case.

  ```
  # paircreate  -g Oradb  -f  never  -vr
  ```

This command creates pairs for all LU designated as Oradb in the configuration definition file (two pairs for the configuration in the above figure).

- Designate a volume name (oradev1) and a remote host P-VOL a case.

  ```
  # paircreate  -g Oradb  -d  oradev1  -f  never  -vr
  ```

This command creates pairs for all LUs designated as oradev1 in the configuration definition file (CL1-A,T1,L1 and CL1-D,T2,L1 for the configuration in the above figure).

- Designate a group name and display pair status.

  ```
  # pairdisplay  -g  Oradb
  Group  PairVol(L/R)  (P,T#,L#),  Seq#,  LDEV#..P/S,  Status,
  Fence, Seq#, P-LDEV# M
  oradb  oradev1(L)   (CL1-D, 2,1) 30054  19...S-VOL   COPY
  NEVER, -----  18     -
  oradb  oradev1(R)   (CL1-A, 1,1) 30053  18...P-VOL   COPY
  NEVER, 30054  19     -
  oradb  oradev2(L)   (CL1-D, 2,2) 30054  21...S-VOL   COPY
  NEVER, -----  20     -
  oradb  oradev2(R)   (CL1-A, 1,2) 30053  20...P-VOL   COPY
  NEVER, 30054  21     -
  ```

The command device is defined using the system raw device name (character-type device file name). For example, the command devices for the following figure would be:

- **HP-UX:**

  ```
  HORCM_CMD of HOSTA = /dev/rdsk/c0t0d1
  HORCM_CMD of HOSTB = /dev/rdsk/c1t0d1
  ```

- **Solaris:**

  ```
  HORCM_CMD of HOSTA = /dev/rdsk/c0t0d1s2
  HORCM_CMD of HOSTB = /dev/rdsk/c1t0d1s2
  ```

  For Solaris operations with CCI version 01-09-03/04 and higher, the command device does not need to be labeled during format command.

- **AIX:**

  ```
  HORCM_CMD of HOSTA = /dev/rhdiskXX
  HORCM_CMD of HOSTB = /dev/rhdiskXX
  ```

  where XX = device number assigned by AIX

- **Tru64 UNIX:**

  ```
  HORCM_CMD of HOSTA = /dev/rdisk/dskXXc
  HORCM_CMD of HOSTB = /dev/rdisk/dskXXc
  ```

  where XX = device number assigned by Tru64 UNIX

- **Windows:**

```
HORCM_CMD of HOSTA = \\.\CMD-Ser#-ldev#-Port#
HORCM_CMD of HOSTB = \\.\CMD-Ser#-ldev#-Port#
```

- **Linux, z/Linux:**

```
HORCM_CMD of HOSTA = /dev/sdX
HORCM_CMD of HOSTB = /dev/sdX
```

  where X = disk number assigned by Linux, z/Linux

- **IRIX64:**

```
HORCM_CMD for HOSTA .../dev/rdsk/dks0d0l1vol    or /dev/rdsk/
node_wwn/lun1vol/c0p0
HORCM_CMD for HOSTB .../dev/rdsk/dks1d0l1vol    or /dev/rdsk/
node_wwn/lun1vol/c1p0
```

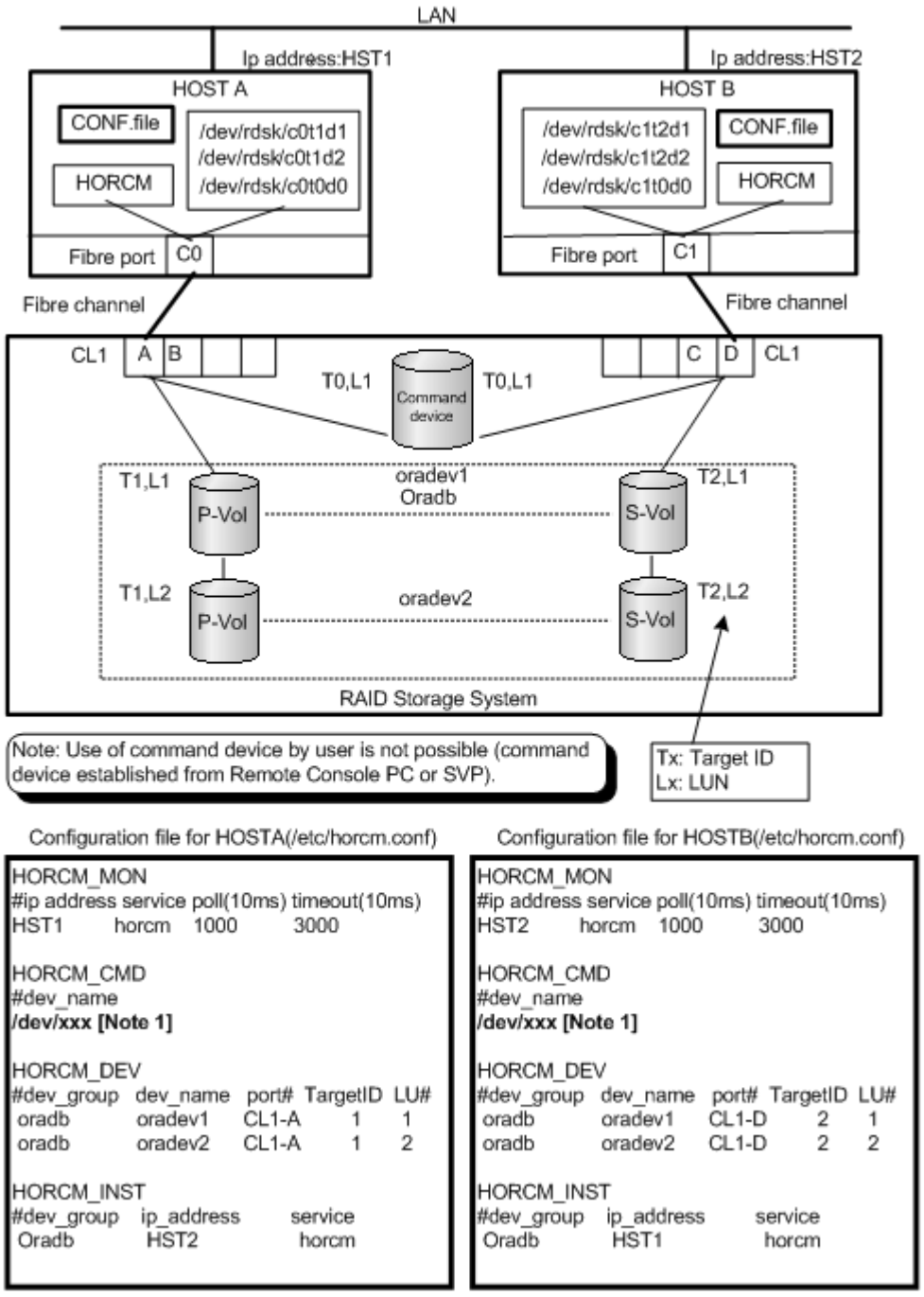

Figure B-9 TrueCopy Local Configuration Example

[Note 1] : Input the raw device (character device) name of UNIX/Windows system for command device.

Example of CCI commands with HOSTA:

- Designate a group name (Oradb) and a local host P- VOL a case.

```
# paircreate  -g Oradb  -f  never  -vl
```

This command creates pairs for all LUs assigned to group Oradb in the configuration definition file (two pairs for the configuration in above figure).

- Designate a volume name (oradev1) and a local host P-VOL a case.

```
# paircreate   -g Oradb  -d oradev1  -f  never   -vl
```

This command creates pairs for all LUs designated as oradev1 in the configuration definition file (CL1-A,T1,L1 and CL1-D,T2,L1 for the configuration in above figure).

- Designate a group name and display pair status.

```
# pairdisplay  -g Oradb
Group  PairVol(L/R) (P,T#,L#),   Seq#,  LDEV#..P/S,  Status,
Fence, Seq#, P-LDEV# M
oradb  oradev1(L)   (CL1-A, 1,1) 30053  18..  P-VOL  COPY
NEVER, 30053  19     -
oradb  oradev1(R)   (CL1-D, 2,1) 30053  19..  S-VOL  COPY
NEVER, -----  18     -
oradb  oradev2(L)   (CL1-A, 1,2) 30053  20..  P-VOL  COPY
NEVER, 30053  21     -
oradb  oradev2(R)   (CL1-D, 2,2) 30053  21..  S-VOL  COPY
NEVER, -----  20     -
```

Example of CCI commands with HOSTB:

- Designate a group name and a remote host P-VOL a case.

```
# paircreate  -g Oradb  -f  never  -vr
```

This command creates pairs for all LU designated as Oradb in the configuration definition file (two pairs for the configuration in figure above).

- Designate a volume name (oradev1) and a remote host P-VOL a case.

```
# paircreate  -g Oradb  -d  oradev1  -f  never  -vr
```

This command creates pairs for all LUs designated as oradev1 in the configuration definition file (CL1-A,T1,L1 and CL1-D,T2,L1 for the configuration in above figure).

- Designate a group name and display pair status.

```
# pairdisplay  -g  Oradb
Group   PairVol(L/R)   (P,T#,L#), Seq#,LDEV#..P/S,  Status,
Fence,Seq#,P-LDEV# M
oradb   oradev1(L)   (CL1-D, 2,1) 30053   19.. S-VOL COPY
NEVER ,-----    18  -
oradb   oradev1(R)   (CL1-A, 1,1) 30053   18.. P-VOL COPY
NEVER ,30053    19  -
oradb   oradev2(L)   (CL1-D, 2,2) 30053   21.. S-VOL COPY
NEVER ,-----    20  -
oradb   oradev2(R)   (CL1-A, 1,2) 30053   20.. P-VOL COPY
NEVER ,30053    21  -
```

The command device is defined using the system raw device name (character-type device file name). The command device defined in the configuration definition file must be established in a way to be following either every instance. If one command device is used between different instances on the same SCSI port, then the number of instances is up to 16

per command device. If this restriction is exceeded, then use a different LU path for each instance. For example, the command devices for the following figure would be:

- **HP-UX:**

```
HORCM_CMD of HORCMINST0 = /dev/rdsk/c0t0d1
HORCM_CMD of HORCMINST1 = /dev/rdsk/c1t0d1
```

- **Solaris:**

```
HORCM_CMD of HORCMINST0 = /dev/rdsk/c0t0d1s2
HORCM_CMD of HORCMINST1 = /dev/rdsk/c1t0d1s2
```

  For Solaris operations with CCI version 01-09-03/04 and higher, the command device does not need to be labeled during format command.

- **AIX:**

```
HORCM_CMD of HORCMINST0 = /dev/rhdiskXX
HORCM_CMD of HORCMINST1 = /dev/rhdiskXX
```

  where XX = device number assigned by AIX

- **Tru64 UNIX:**

```
HORCM_CMD of HORCMINST0 = /dev/rrzbXXc
HORCM_CMD of HORCMINST1 = /dev/rrzbXXc
```

  where XX = device number assigned by Tru64 UNIX

- **Windows:**

```
HORCM_CMD of HORCMINST0 = \\.\CMD-Ser#-ldev#-Port#
HORCM_CMD of HORCMINST1 = \\.\CMD-Ser#-ldev#-Port#
```

- **Linux, z/Linux:**

```
HORCM_CMD of HORCMINST0 = /dev/sdX
HORCM_CMD of HORCMINST1 = /dev/sdX
```

  where X = device number assigned by Linux, z/Linux

- **IRIX64:**

```
HORCM_CMD for HOSTA (/etc/horcm0.conf)...
/dev/rdsk/dks0d0l1vol  or  /dev/rdsk/node_wwn/lun1vol/c0p0
HORCM_CMD for HOSTB (/etc/horcm1.conf)...
/dev/rdsk/dks1d0l1vol  or  /dev/rdsk/node_wwn/lun1vol/c1p0
```

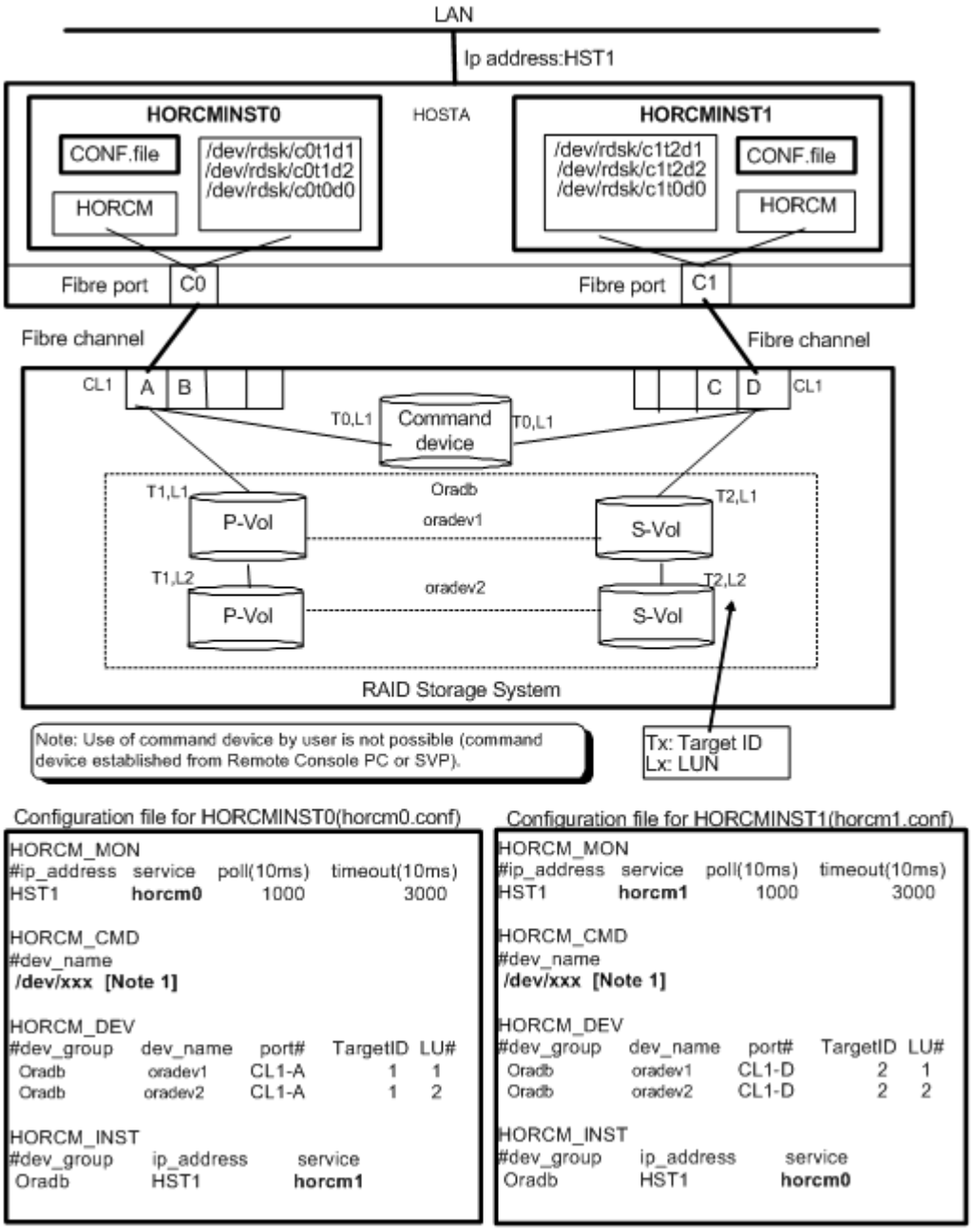

Figure B-10 TrueCopy Configuration Example for Two Instances

[Note 1] : Input the raw device (character device) name of UNIX/Windows system for command device.

Example of CCI commands with Instance-0 on HOSTA:

- When the command execution environment is not set, set an instance number.

For C shell: # setenv HORCMINST 0

For Windows: set HORCMINST=0

- Designate a group name (Oradb) and a local instance P- VOL a case.

```
# paircreate  -g Oradb  -f never  -vl
```

This command creates pairs for all LUs assigned to group Oradb in the configuration definition file (two pairs for the configuration in above figure).

- Designate a volume name (oradev1) and a local instance P-VOL a case.

```
# paircreate   -g Oradb  -d oradev1  -f never   -vl
```

This command creates pairs for all LUs designated as oradev1 in the configuration definition file (CL1-A,T1,L1 and CL1-D,T2,L1 for the configuration in above figure).

- Designate a group name and display pair status.

```
# pairdisplay  -g Oradb
Group  PairVol(L/R) (P,T#,L#),   Seq#,  LDEV#.. P/S, Status,
Fence, Seq#,  P-LDEV# M
oradb  oradev1(L)   (CL1-A, 1,1) 30053  18..   P-VOL COPY
NEVER, 30053  19      -
oradb  oradev1(R)   (CL1-D, 2,1) 30053  19..   S-VOL COPY
NEVER, -----  18      -
oradb  oradev2(L)   (CL1-A, 1,2) 30053  20..   P-VOL COPY
NEVER, 30053  21      -
oradb  oradev2(R)   (CL1-D, 2,2) 30053  21..   S-VOL COPY
NEVER, -----  20      -
```

Example of CCI commands with Instance-1 on HOSTA:

- When the command execution environment is not set, set an instance number.

For C shell: # setenv HORCMINST 1

For Windows: set HORCMINST=1

- Designate a group name and a remote instance P-VOL a case.

```
# paircreate  -g Oradb  -f  never  -vr
```

This command creates pairs for all LU designated as Oradb in the configuration definition file (two pairs for the configuration in above figure).

- Designate a volume name (oradev1) and a remote instance P-VOL a case.

```
# paircreate  -g Oradb  -d  oradev1  -f  never  -vr
```

This command creates pairs for all LUs designated as oradev1 in the configuration definition file (CL1-A,T1,L1 and CL1-D,T2,L1 for the configuration in above figure).

- Designate a group name and display pair status.

```
# pairdisplay  -g  Oradb
Group  PairVol(L/R) (P,T#,L#),   Seq#,   LDEV#.. P/S,  Status,
Fence,  Seq#,  P-LDEV#  M
oradb  oradev1(L)   (CL1-D, 2,1) 30053   19..    S-VOL COPY
NEVER , -----  18       -
oradb  oradev1(R)   (CL1-A, 1,1) 30053   18..    P-VOL COPY
NEVER , 30053  19       -
```

```
oradb  oradev2(L)   (CL1-D, 2,2) 30053   21..    S-VOL COPY
NEVER , -----  20       -
oradb  oradev2(R)   (CL1-A, 1,2) 30053   20..    P-VOL COPY
NEVER , 30053  21       -
```

The command device is defined using the system raw device name (character-type device file name). For example, the command devices for the following figures would be:

- **HP-UX:**

  ```
  HORCM_CMD of HOSTA = /dev/rdsk/c0t0d1
  HORCM_CMD of HOSTB = /dev/rdsk/c1t0d1
  HORCM_CMD of HOSTC = /dev/rdsk/c1t0d1
  HORCM_CMD of HOSTD = /dev/rdsk/c1t0d1
  ```

- **Solaris:**

  ```
  HORCM_CMD of HOSTA = /dev/rdsk/c0t0d1s2
  HORCM_CMD of HOSTB = /dev/rdsk/c1t0d1s2
  HORCM_CMD of HOSTC = /dev/rdsk/c1t0d1s2
  HORCM_CMD of HOSTD = /dev/rdsk/c1t0d1s2
  ```

  For Solaris operations with CCI version 01-09-03/04 and higher, the command device does not need to be labeled during format command.

- **AIX:**

  ```
  HORCM_CMD of HOSTA = /dev/rhdiskXX
  HORCM_CMD of HOSTB = /dev/rhdiskXX
  HORCM_CMD of HOSTC = /dev/rhdiskXX
  HORCM_CMD of HOSTD = /dev/rhdiskXX
  ```

  where XX = device number created automatically by AIX

- **Tru64 UNIX:**

  ```
  HORCM_CMD of HOSTA = /dev/rrzbXXc
  HORCM_CMD of HOSTB = /dev/rrzbXXc
  HORCM_CMD of HOSTC = /dev/rrzbXXc
  HORCM_CMD of HOSTD = /dev/rrzbXXc
  ```

  where XX = device number defined by Tru64 UNIX

- **Windows:**

  ```
  HORCM_CMD of HOSTA = \\.\CMD-Ser#-ldev#-Port#
  HORCM_CMD of HOSTB = \\.\CMD-Ser#-ldev#-Port#
  HORCM_CMD of HOSTC = \\.\CMD-Ser#-ldev#-Port#
  HORCM_CMD of HOSTD = \\.\CMD-Ser#-ldev#-Port#
  ```

- **Linux, z/Linux:**

  ```
  HORCM_CMD of HOSTA = /dev/sdX
  HORCM_CMD of HOSTB = /dev/sdX
  HORCM_CMD of HOSTC = /dev/sdX
  HORCM_CMD of HOSTD = /dev/sdX
  ```

  where X = disk number defined by Linux, z/Linux

- **IRIX64:**

  ```
  HORCM_CMD for HOSTA ... /dev/rdsk/dks0d0l1vol  or /dev/rdsk/
  node_wwn/lun1vol/c0p0
  HORCM_CMD for HOSTB ... /dev/rdsk/dks1d0l1vol  or /dev/rdsk/
  node_wwn/lun1vol/c1p0
  ```

```
HORCM_CMD for HOSTC ... /dev/rdsk/dks1d0l1vol  or /dev/rdsk/
node_wwn/lun1vol/c1p0
HORCM_CMD for HOSTD ... /dev/rdsk/dks1d0l1vol  or /dev/rdsk/
node_wwn/lun1vol/c1p0
```

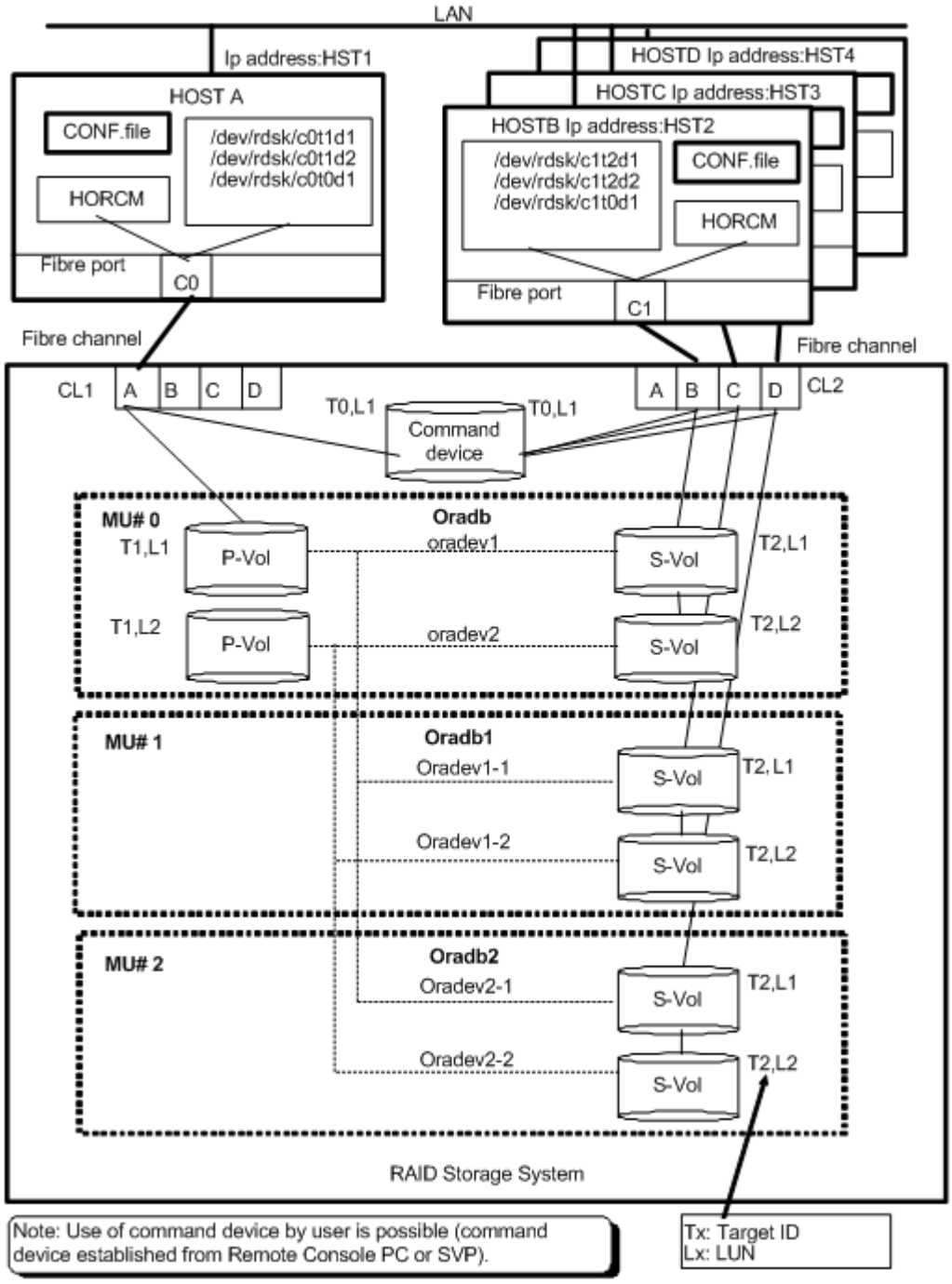

Figure B-11 ShadowImage Configuration Example (continues on the next page)

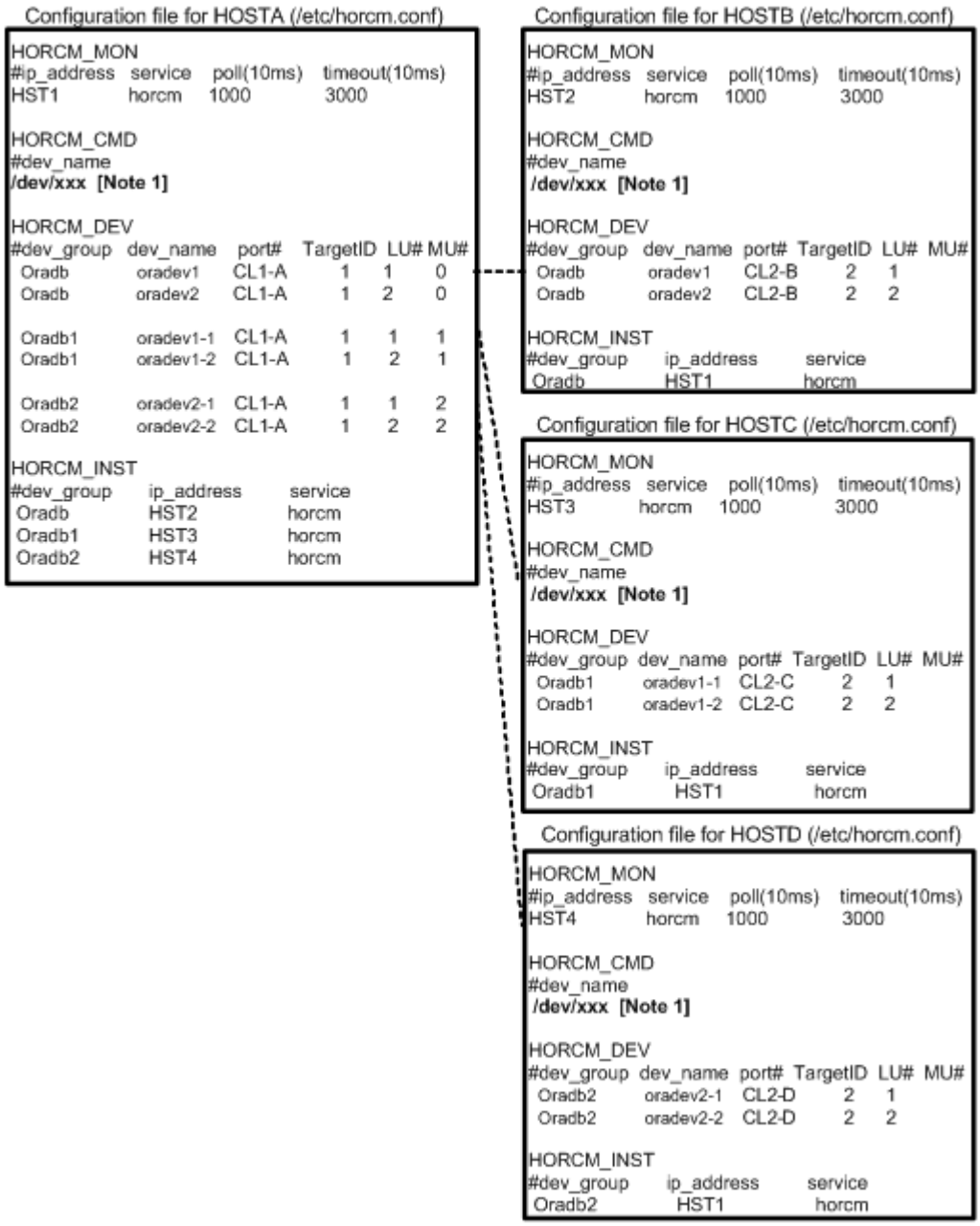

Figure B-12 ShadowImage Configuration Example (continued)

[Note 1] : Input the raw device (character device) name of UNIX/Windows system for command device.

Example of CCI commands with HOSTA (group Oradb):

- When the command execution environment is not set, set HORCC_MRCF to the environment variable.

For C shell: # setenv HORCC_MRCF 1

Windows: set HORCC_MRCF=1

- Designate a group name (Oradb) and a local host P-VOL a case.

```
# paircreate  -g Oradb -vl
```

This command creates pairs for all LUs assigned to group Oradb in the configuration definition file (two pairs for the configuration in above figure).

- Designate a volume name (oradev1) and a local host P-VOL a case.

```
# paircreate  -g Oradb  -d oradev1 -vl
```

This command creates pairs for all LUs designated as oradev1 in the configuration definition file (CL1-A,T1,L1 and CL1-D,T2,L1 for the configuration in the above figure).

- Designate a group name and display pair status.

```
# pairdisplay  -g Oradb
Group   PairVol(L/R) (Port#,TID,LU-M), Seq#,  LDEV#..P/S,
Status, Seq#,  P-LDEV#  M
oradb   oradev1(L)   (CL1-A, 1,1 - 0)  30053  18..P-VOL
COPY    30053   20      -
oradb   oradev1(R)   (CL2-B, 2,1 - 0)  30053  20..S-VOL
COPY    -----   18      -
oradb   oradev2(L)   (CL1-A, 1,2 - 0)  30053  19..P-VOL
COPY    30053   21      -
oradb   oradev2(R)   (CL2-B, 2,2 - 0)  30053  21..S-VOL
COPY    -----   19      -
```

Example of CCI commands with HOSTB (group Oradb):

- When the command execution environment is not set, set HORCC_MRCF to the environment variable.

For C shell: # setenv HORCC_MRCF 1

Windows: set HORCC_MRCF=1

- Designate a group name and a remote host P-VOL a case.

```
# paircreate  -g Oradb  -vr
```

This command creates pairs for all LUs assigned to group Oradb in the configuration definition file (two pairs for the configuration in the above figure).

- Designate a volume name (oradev1) and a remote host P-VOL a case.

```
# paircreate  -g Oradb  -d  oradev1  -vr
```

This command creates pairs for all LUs designated as oradev1 in the configuration definition file (CL1-A,T1,L1 and CL1-D,T2,L1 for the configuration in the above figure).

- Designate a group name and display pair status.

```
# pairdisplay  -g  Oradb
Group   PairVol(L/R) (Port#,TID,LU-M), Seq#,  LDEV#..P/S,
Status, Seq#, P-LDEV#  M
oradb   oradev1(L)   (CL2-B, 2,1 - 0)  30053  20..S-VOL
COPY    -----    18    -
oradb   oradev1(R)   (CL1-A, 1,1 - 0)  30053  18..P-VOL
COPY    30053    20    -
```

```
oradb   oradev2(L)   (CL2-B, 2,2 - 0)  30053  21..S-VOL
COPY    -----    19    -
oradb   oradev2(R)   (CL1-A, 1,2 - 0)  30053  19..P-VOL
COPY    30053    21    -
```

Example of CCI commands with HOSTA (group Oradb1):

- When the command execution environment is not set, set HORCC_MRCF to the environment variable.

For C shell: # setenv HORCC_MRCF 1

For Windows: set HORCC_MRCF=1

- Designate a group name (Oradb1) and a local host P-VOL a case.

```
# paircreate  -g Oradb1 -vl
```

This command creates pairs for all LUs assigned to group Oradb1 in the configuration definition file (two pairs for the configuration in the above figure).

- Designate a volume name (oradev1-1) and a local host P-VOL a case.

```
# paircreate  -g Oradb1  -d oradev1-1 -vl
```

This command creates pairs for all LUs designated as oradev1-1 in the configuration definition file (CL1-A,T1,L1 and CL1-D,T2,L1 for the configuration in the above figure).

- Designate a group name, and display pair status.

```
# pairdisplay  -g Oradb1
Group    PairVol(L/R) (Port#,TID,LU-M),    Seq#,LDEV#..P/S,
Status, Seq#,P-LDEV# M
oradb1   oradev1-1(L) (CL1-A,  1,  1 - 1)  30053  18..P-VOL
COPY  30053      22  -
oradb1   oradev1-1(R) (CL2-C,  2,  1 - 0)  30053  22..S-VOL
COPY  -----      18  -
oradb1   oradev1-2(L) (CL1-A,  1,  2 - 1)  30053  19..P-VOL
COPY  30053      23  -
oradb1   oradev1-2(R) (CL2-C,  2,  2 - 0)  30053  23..S-VOL
COPY  -----      19  -
```

Example of CCI commands with HOSTC (group Oradb1):

- When the command execution environment is not set, set HORCC_MRCF to the environment variable.

For C shell: # setenv HORCC_MRCF 1

For Windows: set HORCC_MRCF=1

- Designate a group name and a remote host P-VOL a case.

```
# paircreate  -g Oradb1  -vr
```

This command creates pairs for all LUs assigned to group Oradb1 in the configuration definition file (two pairs for the configuration in the above figure).

- Designate a volume name (oradev1-1) and a remote host P-VOL a case.

```
# paircreate  -g Oradb1  -d  oradev1-1  -vr
```

This command creates pairs for all LUs designated as oradev1-1 in the configuration definition file (CL1-A,T1,L1 and CL1-D,T2,L1 for the configuration in the above figure).

- Designate a group name and display pair status.

```
# pairdisplay  -g  Oradb1
Group   PairVol(L/R) (Port#,TID,LU-M),  Seq#,  LDEV#..P/S,
Status, Seq#, P-LDEV# M
oradb1  oradev1-1(L) (CL2-C, 2, 1 - 0)  30053  22..S-VOL
COPY    -----   18    -
oradb1  oradev1-1(R) (CL1-A, 1, 1 - 1)  30053  18..P-VOL
COPY    30053   22    -
oradb1  oradev1-2(L) (CL2-C, 2, 2 - 0)  30053  23..S-VOL
COPY    -----   19    -
oradb1  oradev1-2(R) (CL1-A, 1, 2 - 1)  30053  19..P-VOL
COPY    30053   23    -
```

Example of CCI commands with HOSTA (group Oradb2):

- When the command execution environment is not set, set HORCC_MRCF to the environment variable.

For C shell: # setenv HORCC_MRCF 1

For Windows: set HORCC_MRCF=1

- Designate a group name (Oradb2) and a local host P-VOL a case.

```
# paircreate  -g Oradb2 -vl
```

This command creates pairs for all LUs assigned to group Oradb2 in the configuration definition file (two pairs for the configuration in above figure).

- Designate a volume name (oradev2-1) and a local host P-VOL a case.

```
# paircreate  -g Oradb2  -d oradev2-1 -vl
```

This command creates pairs for all LUs designated as oradev2-1 in the configuration definition file (CL1-A,T1,L1 and CL1-D,T2,L1 for the configuration in the above figure).

- Designate a group name and display pair status.

```
# pairdisplay  -g Oradb2
Group   PairVol(L/R) (Port#,TID,LU-M),  Seq#,  LDEV#..P/S,
Status, Seq#, P-LDEV#  M
oradb2  oradev2-1(L) (CL1-A, 1, 1 - 2)  30053  18..P-VOL
COPY    30053  24      -
oradb2  oradev2-1(R) (CL2-D, 2, 1 - 0)  30053  24..S-VOL
COPY    -----  18      -
oradb2  oradev2-2(L) (CL1-A, 1, 2 - 2)  30053  19..P-VOL
COPY    30053  25      -
oradb2  oradev2-2(R) (CL2-D, 2, 2 - 0)  30053  25..S-VOL
COPY    -----  19      -
```

Example of CCI commands with HOSTD (group Oradb2):

- When the command execution environment is not set, set HORCC_MRCF to the environment variable.

For C shell: # setenv HORCC_MRCF 1

For Windows: set HORCC_MRCF=1

- Designate a group name and a remote host P-VOL a case.

```
# paircreate  -g Oradb2  -vr
```

This command creates pairs for all LUs assigned to group Oradb2 in the configuration definition file (two pairs for the configuration in the above figure).

- Designate a volume name (oradev2-1) and a remote host P-VOL a case.

```
# paircreate  -g Oradb2  -d  oradev2-1  -vr
```

This command creates pairs for all LUs designated as oradev2-1 in the configuration definition file (CL1-A,T1,L1 and CL1-D,T2,L1 for the configuration in the above figure).

- Designate a group name and display pair status.

```
# pairdisplay  -g  Oradb2
Group   PairVol(L/R) (Port#,TID,LU-M),   Seq#,  LDEV#..P/S,
Status, Seq#,P-LDEV# M
oradb2  oradev2-1(L) (CL2-D, 2, 1 - 0)   30053  24..S-VOL
COPY   -----    18   -
oradb2  oradev2-1(R) (CL1-A, 1, 1 - 2)   30053  18..P-VOL
COPY   30053    24  -
oradb2  oradev2-2(L) (CL2-D, 2, 2 - 0)   30053  25..S-VOL
COPY   -----    19  -
oradb2  oradev2-2(R) (CL1-A, 1, 2 - 2)   30053  19..P-VOL
COPY   30053    25  -
```

The command device is defined using the system raw device name (character-type device file name). The command device defined in the configuration definition file must be established in a way to be following either every instance. If one command device is used between different instances on the same SCSI port, then the number of instances is up to 16 per command device. If this restriction is exceeded, then use a different LU path for each instance. For example, the command devices for the following figure would be:

- **HP-UX:**
  HORCM_CMD of HORCMINST0 = /dev/rdsk/c0t0d1
  HORCM_CMD of HORCMINST1 = /dev/rdsk/c1t0d1
- **Solaris:**
  HORCM_CMD of HORCMINST0 = /dev/rdsk/c0t0d1s2
  HORCM_CMD of HORCMINST1 = /dev/rdsk/c1t0d1s2
  For Solaris operations with CCI version 01-09-03/04 and higher, the command device does not need to be labeled during format command.
- **AIX:**
  HORCM_CMD of HORCMINST0 = /dev/rhdiskXX
  HORCM_CMD of HORCMINST1 = /dev/rhdiskXX
  where XX = device number assigned by AIX
- **Tru64 UNIX:**

HORCM_CMD of HORCMINST0 = /dev/rrzbXXc
HORCM_CMD of HORCMINST1 = /dev/rrzbXXc
where XX = device number assigned by Tru64 UNIX

- **Windows:**
  HORCM_CMD of HORCMINST0 = \\.\CMD-Ser#-ldev#-Port#
  HORCM_CMD of HORCMINST1 = \\.\CMD-Ser#-ldev#-Port#
- **Linux, z/Linux:**
  HORCM_CMD of HORCMINST0 = /dev/sdX
  HORCM_CMD of HORCMINST1 = /dev/sdX
  where X = disk number defined by Linux, z/Linux
- **IRIX64:**

```
HORCM_CMD for HOSTA (/etc/horcm0.conf)...
/dev/rdsk/dks0d0l1vol or /dev/rdsk/node_wwn/lun1vol/c0p0
HORCM_CMD for HOSTA (/etc/horcm1.conf)...
/dev/rdsk/dks1d0l1vol  or  /dev/rdsk/node_wwn/lun1vol/c1p0
```

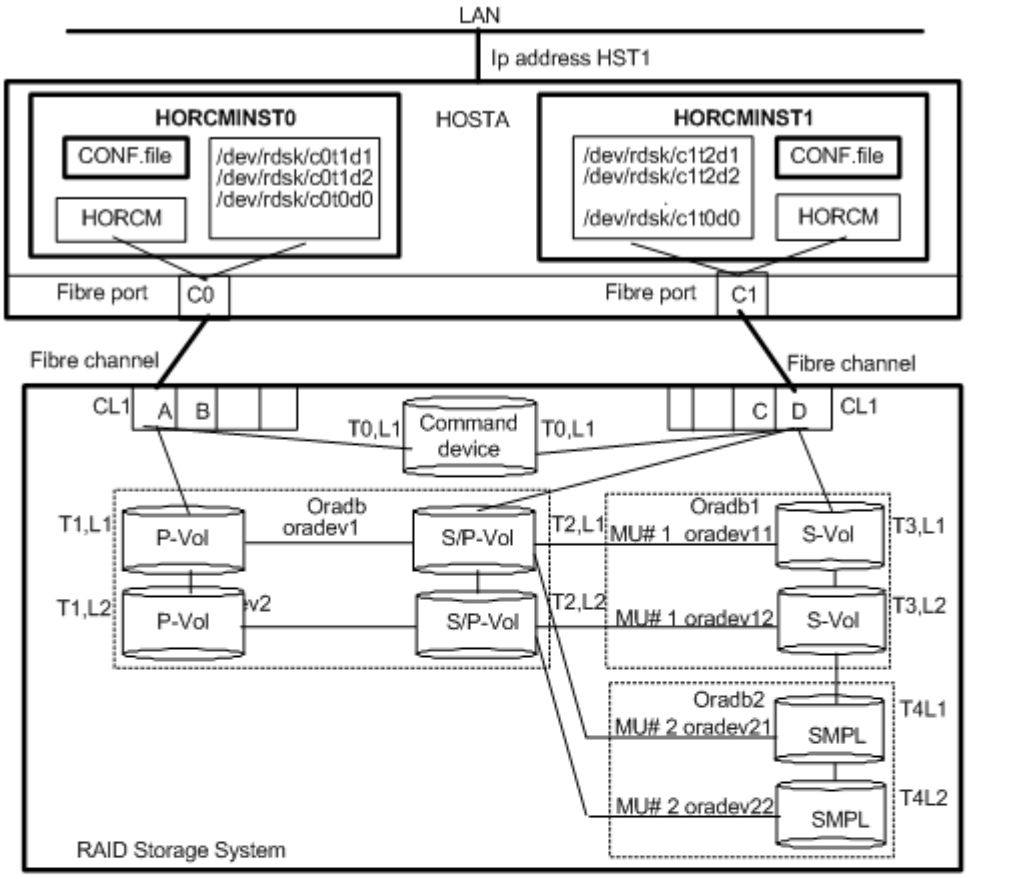

Configuration file for HOSTA (/etc/horcm0.conf)

```
HORCM_MON
#ip_address  service   poll(10ms)  timeout(10ms)
HOST1        horcm0      1000         3000
HORCM_CMD
#dev_name
/dev/xxx  [Note 1]

HORCM_DEV
#dev_group  dev_name  port#  TargetID  LU#  MU#
Oradb       oradb1    CL1-A      1      1    0
Oradb       oradb2    CL1-A      1      2    0
Oradb1      oradb11   CL1-D      3      1    0
Oradb1      oradb12   CL1-D      3      2    0
Oradb2      oradb21   CL1-D      4      1    0
Oradb2      oradb22   CL1-D      4      2    0

HORCM_INST
#dev_group   ip_address   service
Oradb        HST1         horcm1
Oradb1       HST1         horcm1
Oradb2       HST1         horcm1
```

Configuration file for HOSTA (/etc/horcm1.conf)

```
HORCM_MON
#ip_address  service   poll(10ms)  timeout(10ms)
HST1         horcm1      1000         3000

HORCM_CMD
#dev_name
/dev/xxx  [Note 1]

HORCM_DEV
#dev_group  dev_name  port#  TargetID  LU#  MU#
Oradb       oradb1    CL1-D      2      1    0
Oradb       oradb2    CL1-D      2      2    0
Oradb1      oradb11   CL1-D      2      1    1
Oradb1      oradb12   CL1-D      2      2    1
Oradb2      oradb21   CL1-D      2      1    2
Oradb2      oradb22   CL1-D      2      2    2

HORCM_INST
#dev_group   ip_address   service
Oradb        HST1         horcm0
Oradb1       HST1         horcm0
Oradb2       HST1         horcm0
```

Figure B-13 ShadowImage Configuration Example with Cascade Pairs

[Note 1] : Input the raw device (character device) name of UNIX/Windows system for command device.

See Correspondence of the configuration definition file for cascading volume and mirror descriptors on page B-43 for more information about ShadowImage cascading configurations.

Example of CCI commands with Instance-0 on HOSTA:

- When the command execution environment is not set, set an instance number.

For C shell:# setenv HORCMINST 0 # setenv HORCC_MRCF 1

For Windows:set HORCMINST=0 set HORCC_MRCF=1

- Designate a group name (Oradb) and a local instance P- VOL a case.

```
# paircreate  -g Oradb  -vl
# paircreate  -g Oradb1  -vr
```

These commands create pairs for all LUs assigned to groups Oradb and Oradb1 in the configuration definition file.

- Designate a group name and display pair status.

```
# pairdisplay -g oradb -m cas
Group   PairVol(L/R) (Port#,TID,LU-M),  Seq#,  LDEV#. P/S,
Status, Seq#, P-LDEV# M
oradb   oradev1(L)   (CL1-A , 1,  1-0)  30053  266..  P-VOL
PAIR,  30053   268    -
oradb   oradev1(R)   (CL1-D , 2,  1-0)  30053  268..  S-VOL
PAIR,  -----   266    -
oradb1  oradev11(R)  (CL1-D , 2,  1-1)  30053  268..  P-VOL
PAIR,  30053   270    -
oradb2  oradev21(R)  (CL1-D , 2,  1-2)  30053  268..  SMPL
----,  -----   ----   -
oradb   oradev2(L)   (CL1-A , 1,  2-0)  30053  267..  P-VOL
PAIR,  30053   269    -
oradb   oradev2(R)   (CL1-D , 2,  2-0)  30053  269..  S-VOL
PAIR,  -----   267    -
oradb1  oradev12(R)  (CL1-D , 2,  2-1)  30053  269..  P-VOL
PAIR,  30053   271    -
oradb2  oradev22(R)  (CL1-D , 2,  2-2)  30053  269..  SMPL
----,  -----   ----   -
```

Example of CCI commands with Instance-1 on HOSTA:

- When the command execution environment is not set, set an instance number.

For C shell:# setenv HORCMINST 1 # setenv HORCC_MRCF 1

For Windows:set HORCMINST=1 set HORCC_MRCF=1

- Designate a group name and a remote instance P-VOL a case.

```
# paircreate  -g Oradb  -vr
# paircreate  -g Oradb1  -vl
```

These commands create pairs for all LUs assigned to groups Oradb and Oradb1 in the configuration definition file.

- Designate a group name and display pair status.

```
# pairdisplay -g oradb -m cas
Group   PairVol(L/R) (Port#,TID,LU-M),Seq#,LDEV#.P/S,Status,
Seq#,P-LDEV# M
oradb   oradev1(L)  (CL1-D , 2,  1-0)30053  268..S-VOL
PAIR,-----    266  -
oradb1  oradev11(L) (CL1-D , 2,  1-1)30053  268..P-VOL PAIR,
```

```
30053    270  -
oradb2  oradev21(L) (CL1-D , 2,  1-2)30053  268..SMPL
----,-----   ----  -
oradb   oradev1(R)  (CL1-A , 1,  1-0)30053  266..P-VOL PAIR,
30053    268  -
oradb   oradev2(L)  (CL1-D , 2,  2-0)30053  269..S-VOL
PAIR,-----    267  -
oradb1  oradev12(L) (CL1-D , 2,  2-1)30053  269..P-VOL PAIR,
30053    271  -
oradb2  oradev22(L) (CL1-D , 2,  2-2)30053  269..SMPL
----,-----   ----  -
oradb   oradev2(R)  (CL1-A , 1,  2-0)30053  267..P-VOL PAIR,
30053    269  -
```

The command device is defined using the system raw device name (character-type device file name). The command device defined in the configuration definition file must be established in a way to be following either every instance. If one command device is used between different instances on the same SCSI port, then the number of instances is up to 16 per command device. If this restriction is exceeded, then use a different LU path for each instance. For example, the command devices for the following figures would be:

- **HP-UX:**
  HORCM_CMD of HOSTA (/etc/horcm.conf) ... /dev/rdsk/c0t0d1
  HORCM_CMD of HOSTB (/etc/horcm.conf) ... /dev/rdsk/c1t0d1
  HORCM_CMD of HOSTB (/etc/horcm0.conf) ... /dev/rdsk/c1t0d1
- **Solaris:**
  HORCM_CMD of HOSTA(/etc/horcm.conf) ... /dev/rdsk/c0t0d1s2
  HORCM_CMD of HOSTB(/etc/horcm.conf) ... /dev/rdsk/c1t0d1s2
  HORCM_CMD of HOSTB(/etc/horcm0.conf) ... /dev/rdsk/c1t0d1s2
  For Solaris operations with CCI version 01-09-03/04 and higher, the command device does not need to be labeled during format command.
- **AIX:**
  HORCM_CMD of HOSTA(/etc/horcm.conf) ... /dev/rhdiskXX
  HORCM_CMD of HOSTB(/etc/horcm.conf) ... /dev/rhdiskXX
  HORCM_CMD of HOSTB(/etc/horcm0.conf)... /dev/rhdiskXX
  where XX = device number assigned by AIX
- **Tru64 UNIX:**
  HORCM_CMD of HOSTA(/etc/horcm.conf) ... /dev/rrzbXXc
  HORCM_CMD of HOSTB(/etc/horcm.conf) ... /dev/rrzbXXc
  HORCM_CMD of HOSTB(/etc/horcm0.conf)... /dev/rrzbXXc
  where XX = device number assigned by Tru64 UNIX
- **Windows:**
  HORCM_CMD of HOSTA(/etc/horcm.conf) ... \\.\CMD-Ser#-ldev#-Port#
  HORCM_CMD of HOSTB(/etc/horcm.conf) ... \\.\CMD-Ser#-ldev#-Port#
  HORCM_CMD of HOSTB(/etc/horcm0.conf) ... \\.\CMD-Ser#-ldev#-Port#

- **Linux, z/Linux:**
  HORCM_CMD of HOSTA(/etc/horcm.conf) ... /dev/sdX
  HORCM_CMD of HOSTB(/etc/horcm.conf) ... /dev/sdX
  HORCM_CMD of HOSTB(/etc/horcm0.conf) ... /dev/sdX
  where X = device number assigned by Linux, z/Linux
- **IRIX64:**
  HORCM_CMD for HOSTA (/etc/horcm.conf) ... /dev/rdsk/dks0d0l1vol or /dev/rdsk/node_wwn/lun1vol/c0p0
  HORCM_CMD for HOSTB (/etc/horcm.conf) ... /dev/rdsk/dks1d0l1vol or /dev/rdsk/node_wwn/lun1vol/c1p0
  HORCM_CMD for HOSTB (/etc/horcm0.conf)... /dev/rdsk/dks1d0l1vol or /dev/rdsk/node_wwn/lun1vol/c1p0

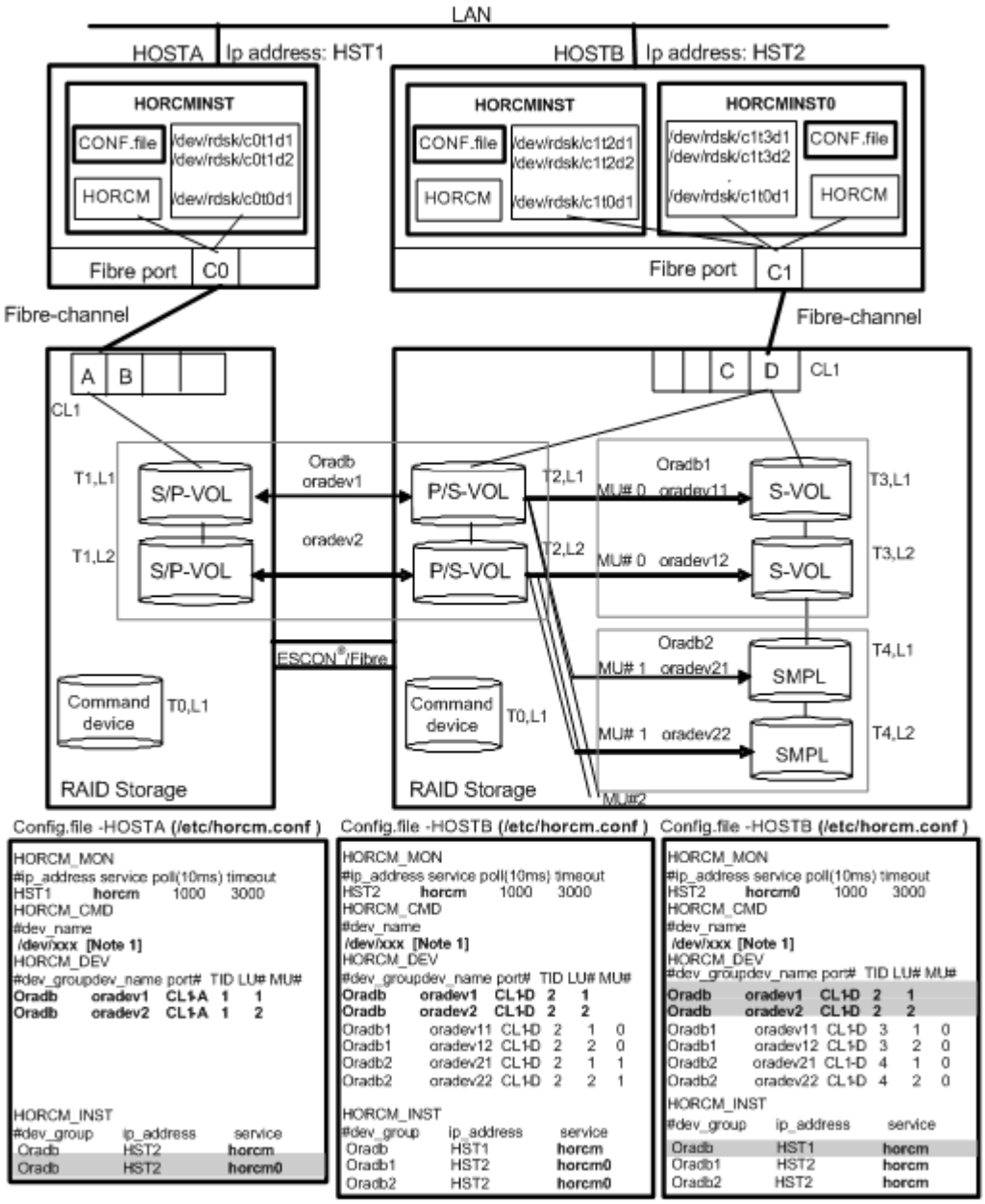

Config.file -HOSTA (**/etc/horcm.conf**)

```
HORCM_MON
#ip_address service poll(10ms) timeout
HST1        horcm      1000     3000
HORCM_CMD
#dev_name
/dev/xxx [Note 1]
HORCM_DEV
#dev_groupdev_name port#  TID LU# MU#
Oradb       oradev1  CL1-A  1    1
Oradb       oradev2  CL1-A  1    2
HORCM_INST
#dev_group    ip_address      service
Oradb         HST2            horcm
Oradb         HST2            horcm0
```

Config.file -HOSTB (**/etc/horcm.conf**)

```
HORCM_MON
#ip_address service poll(10ms) timeout
HST2        horcm      1000     3000
HORCM_CMD
#dev_name
/dev/xxx [Note 1]
HORCM_DEV
#dev_groupdev_name port#  TID LU# MU#
Oradb       oradev1  CL1-D  2    1
Oradb       oradev2  CL1-D  2    2
Oradb1      oradev11 CL1-D  2    1    0
Oradb1      oradev12 CL1-D  2    2    0
Oradb2      oradev21 CL1-D  2    1    1
Oradb2      oradev22 CL1-D  2    2    1
HORCM_INST
#dev_group    ip_address      service
Oradb         HST1            horcm
Oradb1        HST2            horcm0
Oradb2        HST2            horcm0
```

Config.file -HOSTB (**/etc/horcm.conf**)

```
HORCM_MON
#ip_address service poll(10ms) timeout
HST2        horcm0     1000     3000
HORCM_CMD
#dev_name
/dev/xxx [Note 1]
HORCM_DEV
#dev_groupdev_name port#  TID LU# MU#
Oradb       oradev1  CL1-D  2    1
Oradb       oradev2  CL1-D  2    2
Oradb1      oradev11 CL1-D  3    1    0
Oradb1      oradev12 CL1-D  3    2    0
Oradb2      oradev21 CL1-D  4    1    0
Oradb2      oradev22 CL1-D  4    2    0
HORCM_INST
#dev_group    ip_address      service
Oradb         HST1            horcm
Oradb1        HST2            horcm
Oradb2        HST2            horcm
```

Shaded portions: If HORCMINSTO needs to operate TrueCopy´s paired volume, then describe **oradb**.

Figure B-14 TC/SI Configuration Example with Cascade Pairs

[Note 1] : Input the raw device (character device) name of UNIX/Windows system for command device.

Example of CCI commands with HOSTA and HOSTB:

- Designate a group name (Oradb) on TrueCopy environment of HOSTA.
  ```
  # paircreate  -g Oradb  -vl
  ```
- Designate a group name (Oradb1) on ShadowImage environment of HOSTB. When the command execution environment is not set, set HORCC_MRCF.

For C shell: # setenv HORCC_MRCF 1

For Windows: set HORCC_MRCF=1

paircreate -g Oradb1 -vl

These commands create pairs for all LUs assigned to groups Oradb and Oradb1 in the configuration definition file (four pairs for the configuration in the above figures).

- Designate a group name and display pair status on HOSTA.

```
# pairdisplay -g oradb -m cas
Group   PairVol(L/R) (Port#,TID,LU-M),Seq#,LDEV#.P/S,Status,
Seq#,P-LDEV# M
oradb   oradev1(L)  (CL1-A , 1,  1-0)30052  266..SMPL
----,-----   ----  -
oradb   oradev1(L)  (CL1-A , 1,  1)  30052  266..P-VOL COPY,
30053    268  -
oradb1  oradev11(R) (CL1-D , 2,  1-0)30053  268..P-VOL COPY,
30053    270  -
oradb2  oradev21(R) (CL1-D , 2,  1-1)30053  268..SMPL
----,-----   ----  -
oradb   oradev1(R)  (CL1-D , 2,  1)  30053  268..S-VOL
COPY,-----    266  -
oradb   oradev2(L)  (CL1-A , 1,  2-0)30052  267..SMPL
----,-----   ----  -
oradb   oradev2(L)  (CL1-A , 1,  2)  30052  267..P-VOL COPY,
30053    269  -
oradb1  oradev12(R) (CL1-D , 2,  2-0)30053  269..P-VOL COPY,
30053    271  -
oradb2  oradev22(R) (CL1-D , 2,  2-1)30053  269..SMPL
----,-----   ----  -
oradb   oradev2(R)  (CL1-D , 2,  2)  30053  269..S-VOL
COPY,-----    267  -
```

Example of CCI commands with HOSTB:

- Designate a group name (oradb) on TrueCopy environment of HOSTB.

```
# paircreate  -g Oradb  -vr
```

- Designate a group name (Oradb1) on ShadowImage environment of HOSTB. When the command execution environment is not set, set HORCC_MRCF.

For C shell: # setenv HORCC_MRCF 1

For Windows: set HORCC_MRCF=1

paircreate -g Oradb1 -vl

This command creates pairs for all LUs assigned to group Oradb1 in the configuration definition file (four pairs for the configuration in the above figures).

- Designate a group name and display pair status on TrueCopy environment of HOSTB.

```
# pairdisplay -g oradb -m cas
Group   PairVol(L/R) (Port#,TID,LU-M),Seq#,LDEV#.P/S,Status,
Seq#,P-LDEV# M
oradb1  oradev11(L) (CL1-D , 2,  1-0)30053  268..P-VOL PAIR,
```

```
30053    270  -
oradb2  oradev21(L) (CL1-D , 2,  1-1)30053  268..SMPL
----,-----   ----  -
oradb   oradev1(L)  (CL1-D , 2,  1)  30053  268..S-VOL
PAIR,-----    266  -
oradb   oradev1(R)  (CL1-A , 1,  1-0)30052  266..SMPL
----,-----   ----  -
oradb   oradev1(R)  (CL1-A , 1,  1)  30052  266..P-VOL PAIR,
30053    268  -
oradb1  oradev12(L) (CL1-D , 2,  2-0)30053  269..P-VOL PAIR,
30053    271  -
oradb2  oradev22(L) (CL1-D , 2,  2-1)30053  269..SMPL
----,-----   ----  -
oradb   oradev2(L)  (CL1-D , 2,  2)  30053  269..S-VOL
PAIR,-----    267  -
oradb   oradev2(R)  (CL1-A , 1,  2-0)30052  267..SMPL
----,-----   ----  -
oradb   oradev2(R)  (CL1-A , 1,  2)  30052  267..P-VOL PAIR,
30053    269  -
```

- Designate a group name and display pair status on ShadowImage environment of HOSTB.

```
# pairdisplay -g oradb1 -m cas
Group   PairVol(L/R) (Port#,TID,LU-M),Seq#,LDEV#.P/S,Status,
Seq#,P-LDEV# M
oradb1  oradev11(L) (CL1-D , 2,  1-0)30053  268..P-VOL PAIR,
30053    270  -
oradb2  oradev21(L) (CL1-D , 2,  1-1)30053  268..SMPL
----,-----   ----  -
oradb   oradev1(L)  (CL1-D , 2,  1)  30053  268..S-VOL
PAIR,-----    266  -
oradb1  oradev11(R) (CL1-D , 3,  1-0)30053  270..S-VOL
PAIR,-----    268  -
oradb1  oradev12(L) (CL1-D , 2,  2-0)30053  269..P-VOL PAIR,
30053    271  -
oradb2  oradev22(L) (CL1-D , 2,  2-1)30053  269..SMPL
----,-----   ----  -
oradb   oradev2(L)  (CL1-D , 2,  2)  30053  269..S-VOL
PAIR,-----    267  -
oradb1  oradev12(R) (CL1-D , 3,  2-0)30053  271..S-VOL
PAIR,-----    269  -
```

- Designate a group name and display pair status on ShadowImage environment of HOSTB (HORCMINST0).

```
# pairdisplay -g oradb1 -m cas
Group   PairVol(L/R) (Port#,TID,LU-M),Seq#,LDEV#.P/S,Status,
Seq#,P-LDEV# M
oradb1  oradev11(L) (CL1-D , 3,  1-0)30053  270..S-VOL
PAIR,-----    268  -
oradb1  oradev11(R) (CL1-D , 2,  1-0)30053  268..P-VOL PAIR,
30053    270  -
oradb2  oradev21(R) (CL1-D , 2,  1-1)30053  268..SMPL
----,-----   ----  -
oradb   oradev1(R)  (CL1-D , 2,  1)  30053  268..S-VOL
PAIR,-----    266  -
oradb1  oradev12(L) (CL1-D , 3,  2-0)30053  271..S-VOL
PAIR,-----    269  -
oradb1  oradev12(R) (CL1-D , 2,  2-0)30053  269..P-VOL PAIR,
30053    271  -
```

```
oradb2  oradev22(R) (CL1-D , 2,  2-1)30053  269..SMPL
----,-----   ----  -
oradb   oradev2(R)  (CL1-D , 2,  2)  30053  269..S-VOL
PAIR,-----    267  -
```

Correspondence of the configuration definition file for cascading volume and mirror descriptors

The CCI software (HORCM) is capable of keeping a record of the multiple pair configurations per LDEV. CCI distinguishes the records of the each pair configuration by MU#. You can assign 64 MU#s for local copy products and 4 MU#s for remote copy products as the following figure, you can define up to 68 device groups (records of pair configuration) in the configuration definition file.

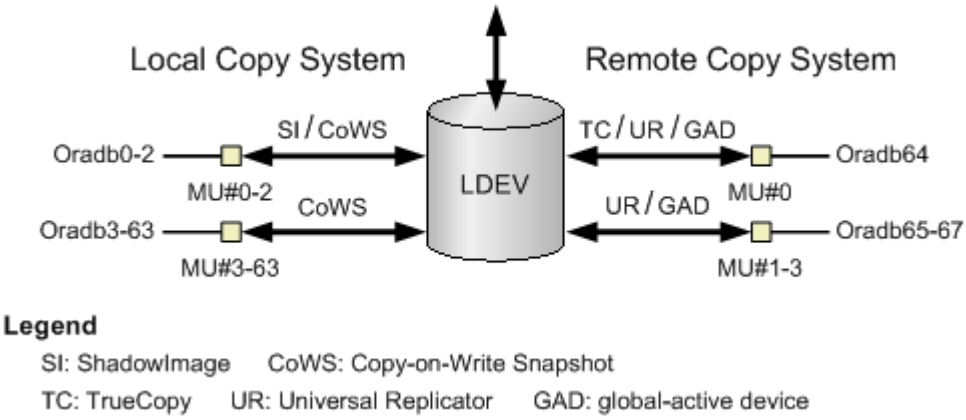

Figure B-15 Management of Pair configuration by Mirror Descriptors

The group name and MU# that are noted in the HORCM_DEV section of the configuration definition file are assigned to the corresponding mirror descriptors. This outline is described in the following table. "Omission of MU#" is handled as MU#0, and the specified group is registered to MU#0 on ShadowImage/Copy-on-Write Snapshot and TrueCopy/Universal Replicator/ global-active device. Also, when you note the MU# in HORCM_DEV, the sequence of the MU# can be random (for example, 2, 1, 0).

Table B-1 Assignments of Group name and MU# to Mirror Descriptors

HORCM_DEV Parameter in Configuration File	MU#0		ShadowImage (Copy-on-Write Snapshot) Only	UR/GAD
	TC/ UR/GAD	SI	MU#1-#2 (MU#3-#63)	MU#1-#3
HORCM_DEV #dev_group dev_name port# TargetID LU# MU# Oradb oradev1 CL1-D 2 1	oradev1	oradev1	-	-
HORCM_DEV	oradev1	oradev1	oradev11	-

HORCM_DEV Parameter in Configuration File	MU#0		ShadowImage (Copy-on-Write Snapshot) Only	UR/GAD
	TC/ UR/GAD	SI	MU#1-#2 (MU#3-#63)	MU#1-#3
#dev_group dev_name port# TargetID LU# MU# Oradb oradev1 CL1-D 2 1 Oradb1 oradev11 CL1-D 2 1 1 Oradb2 oradev21 CL1-D 2 1 2			oradev21	
HORCM_DEV #dev_group dev_name port# TargetID LU# MU# Oradb oradev1 CL1-D 2 1 Oradb1 oradev11 CL1-D 2 1 0 Oradb2 oradev21 CL1-D 2 1 1 Oradb3 oradev31 CL1-D 2 1 2	oradev1	oradev11	oradev21 oradev31	-
HORCM_DEV #dev_group dev_name port# TargetID LU# MU# Oradb oradev1 CL1-D 2 1 0	-	oradev1	-	-
HORCM_DEV #dev_group dev_name port# TargetID LU# MU# Oradb oradev1 CL1-D 2 1 h0	oradev1	-	-	-
HORCM_DEV #dev_group dev_name port# TargetID LU# MU# Oradb oradev1 CL1-D 2 1 0 Oradb1 oradev1 CL1-D 2 1 1 Oradb2 oradev21 CL1-D 2 1 2	-	oradev1	oradev11 oradev21	-
HORCM_DEV #dev_group dev_name port# TargetID LU# MU# Oradb oradev1 CL1-D 2 1 Oradb1 oradev11 CL1-D 2 1 0 Oradb2 oradev21 CL1-D 2 1 h1 Oradb3 oradev31 CL1-D 2 1 h2 Oradb4 oradev41 CL1-D 2 1 h3	oradev1	oradev11	-	oradev21 oradev31 oradev41

Cascade function and configuration files

Each volume in a cascading connection is described by an entry in the configuration definition file on the each HORCM instance, and each connection of the volume is specified by mirror descriptor. In the case of a ShadowImage/TrueCopy cascading connection, too, the volume is described in the configuration definition file on the same instance. The following topics present examples of ShadowImage and ShadowImage/ TrueCopy cascading configurations.

ShadowImage

The following figure shows an example of a ShadowImage cascade configuration and the associated entries in the configuration definition files. ShadowImage is a mirror configuration within one storage system, so the volumes are described in the configuration definition file for each HORCM instance: volumes T3L0, T3L4, and T3L6 in HORCMINST0, and volume T3L2 in HORCMINST1. As shown in this ShadowImage cascading connection example, the specified dev group is assigned to the ShadowImage mirror descriptor: MU#0 in HORCMINST0, and MU#0, MU#1 and MU#2 in HORCMINST1

Figure B-17 Pairdisplay -g on HORCMINST0 on page B-46, Figure B-18 Pairdisplay -g on HORCMINST1 on page B-46, and Figure B-19 Pairdisplay -d on HORCMINST0 on page B-46 show the pairdisplay information for this example of a ShadowImage cascading configuration.

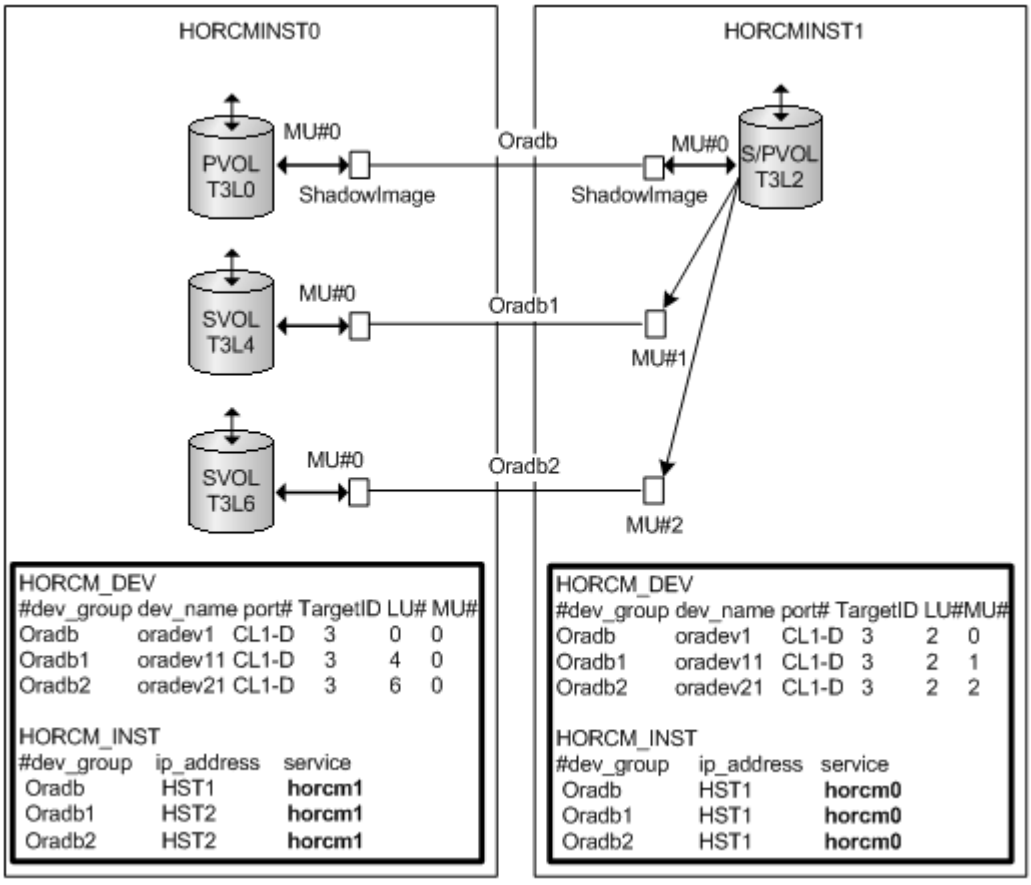

Figure B-16 ShadowImage Cascade Connection and Configuration File

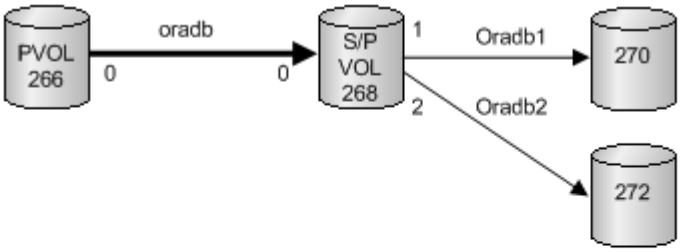


```
# pairdisplay -g oradb -m cas
Group   PairVol(L/R) (Port#,TID,LU-M),Seq#,LDEV#.P/S,Status, Seq#,P-LDEV# M
oradb   oradev1(L)  (CL1-D , 3,  0-0) 30053  266..P-VOL PAIR,30053   268  -
oradb   oradev1(R)  (CL1-D , 3,  2-0) 30053  268..S-VOL PAIR,-----    266  -
oradb1  oradev11(R) (CL1-D , 3,  2-1) 30053  268..P-VOL PAIR,30053   270  -
oradb2  oradev21(R) (CL1-D , 3,  2-2) 30053  268..P-VOL PAIR,30053   272  -
```

Figure B-17 Pairdisplay -g on HORCMINST0

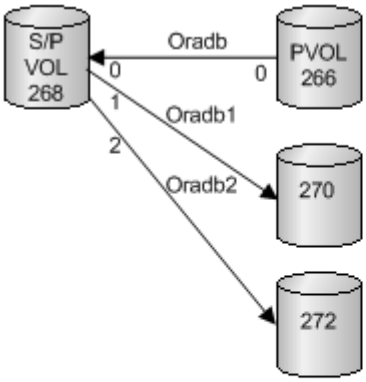


```
# pairdisplay -g oradb -m cas
Group   PairVol(L/R) (Port#,TID,LU-M),Seq#,LDEV#.P/S,Status, Seq#,P-LDEV# M
oradb   oradev1(L)   (CL1-D , 3,  2-0)30053   268..S-VOL PAIR,-----    266  -
oradb1  oradev11(L) (CL1-D , 3,  2-1)30053  268..P-VOL PAIR,30053   270  -
oradb2  oradev21(L) (CL1-D , 3,  2-2)30053  268..P-VOL PAIR,30053   272  -
oradb   oradev1(R)   (CL1-D , 3,  0-0)30053   266..P-VOL PAIR,30053   268  -
```

Figure B-18 Pairdisplay -g on HORCMINST1

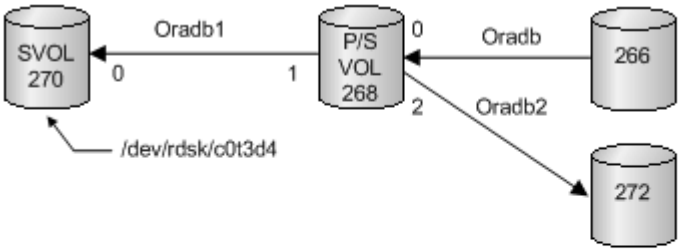


```
# pairdisplay -d /dev/rdsk/c0t3d4 -m cas
Group   PairVol(L/R) (Port#,TID,LU-M),Seq#,LDEV#.P/S,Status, Seq#,P-LDEV# M
oradb1  oradev11(L) (CL1-D , 3,  4-0)30053  270..S-VOL PAIR,-----    268  -
oradb1  oradev11(R)  (CL1-D , 3,  2-1)30053  268..P-VOL  PAIR,30053   270  -
oradb   oradev1(R)   (CL1-D , 3,  2-0)30053  268..S-VOL  PAIR,-----    266  -
oradb2  oradev21(R)  (CL1-D , 3,  2-2)30053  268..P-VOL  PAIR,30053   272  -
```

Figure B-19 Pairdisplay -d on HORCMINST0

Cascading connections for TrueCopy and ShadowImage

The cascading connections for TrueCopy/ShadowImage can be set up by using three configuration definition files that describe the cascading volume entity in a configuration definition file on the same instance. The mirror descriptor of ShadowImage and TrueCopy definitely describe "0" as MU#, and the mirror descriptor of TrueCopy does not describe "0" as MU#.

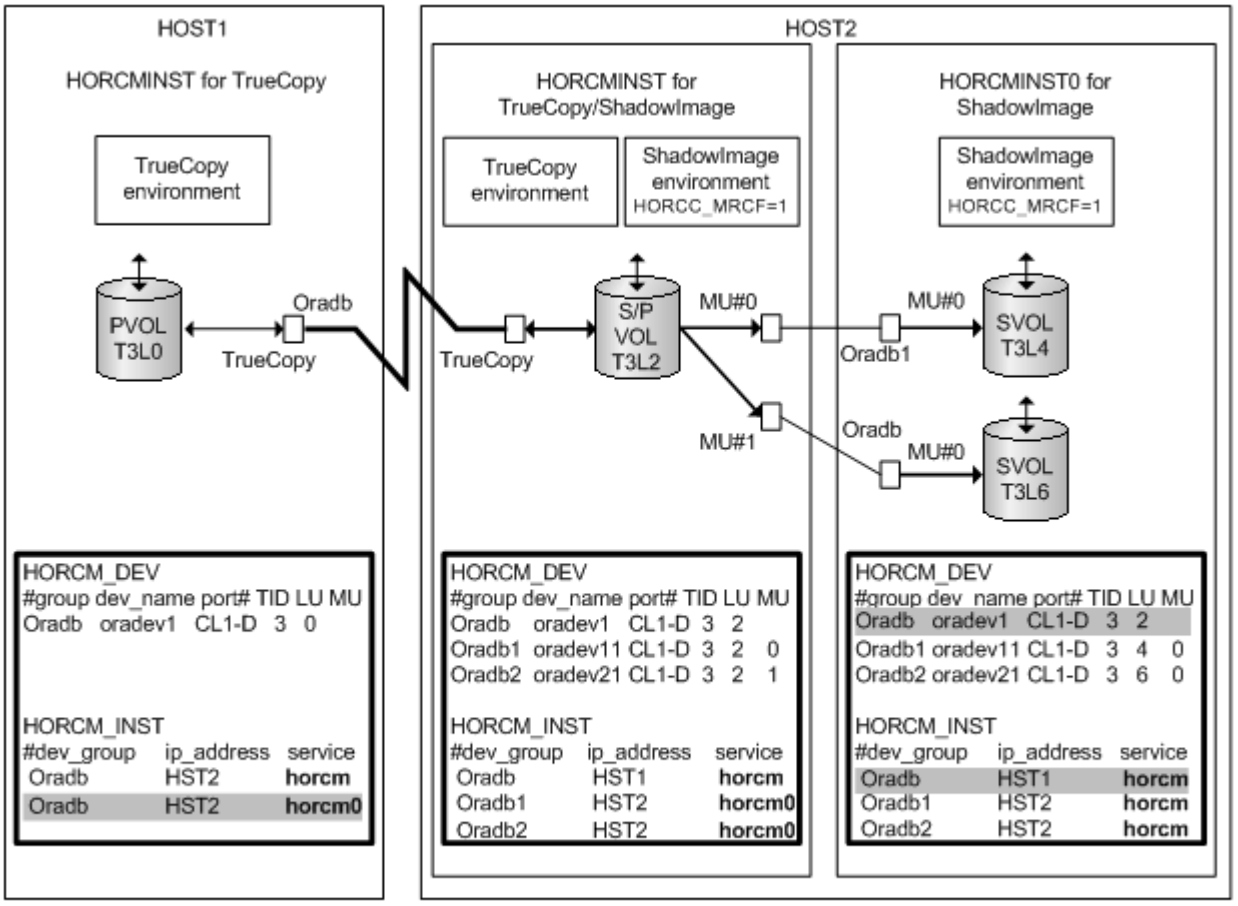

Shaded portions: If HORCMINST0 needs to operate TrueCopy's paired volume, then "oradb" must describe that there is a connection to HST1 via HORCMINST0.

Figure B-20 TC/SI Cascading Connection and Configuration File

The following figures cascading configurations and the pairdisplay information for each configuration.

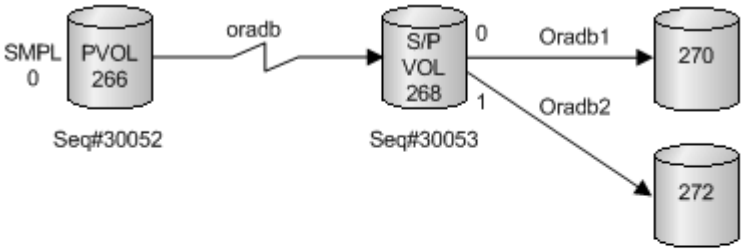


```
# pairdisplay -g oradb -m cas
Group   PairVol(L/R) (Port#,TID,LU-M),Seq#,LDEV#.P/S,Status, Seq#,P-LDEV# M
oradb   oradev1(L)   (CL1-D , 3,  0-0) 30052   266..SMPL  ---,-----          ----   -
oradb    oradev1(L)  (CL1-D , 3,  0)    30052   266..P-VOL COPY,30053   268    -
oradb1  oradev11(R) (CL1-D , 3,  2-0) 30053   268..P-VOL COPY,30053   270    -
oradb2  oradev21(R) (CL1-D , 3,  2-1) 30053   268..P-VOL PSUS,30053   272    W
oradb   oradev1(R)   (CL1-D , 3,  2)    30053   268..S-VOL COPY,-----   266    -
```

Figure B-21 Pairdisplay for TrueCopy on HOST1

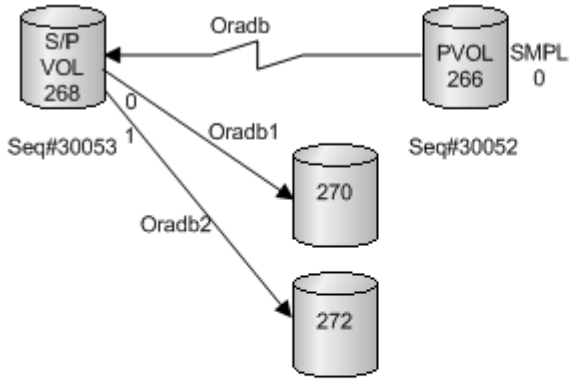


```
# pairdisplay -g oradb -m cas
Group   PairVol(L/R) (Port#,TID,LU-M),Seq#,LDEV#.P/S,Status, Seq#,P-LDEV# M
oradb1  oradev11(L)  (CL1-D , 3,  2-0) 30053  268..P-VOL PAIR,30053   270  -
oradb2  oradev21(L)  (CL1-D , 3,  2-1) 30053  268..P-VOL PSUS,30053  272  W
oradb   oradev1(L)   (CL1-D , 3,  2)    30053  268..S-VOL PAIR, -----  266  -
oradb   oradev1(R)   (CL1-D ,  3,  0-0) 30052  266..SMPL  ---,   -----   ---- -
oradb   oradev1(R)   (CL1-D ,  3,  0)   30052  266..P-VOL PAIR, 30053   268 -
```

Figure B-22 Pairdisplay for TrueCopy on HOST2 (HORCMINST)

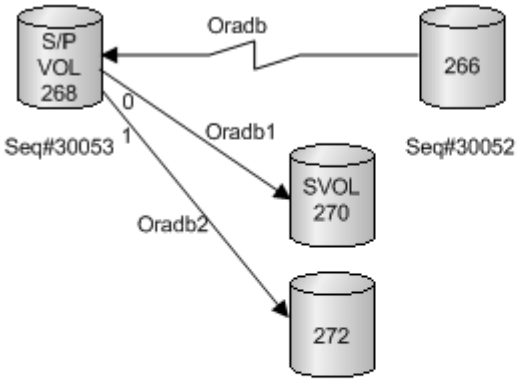


```
# pairdisplay -g oradb -m cas
Group   PairVol(L/R) (Port#,TID,LU-M),Seq#,LDEV#.P/S,Status, Seq#,P-LDEV# M
oradb1  oradev11(L)  (CL1-D , 3,  2-0) 30053  268..P-VOL PAIR,30053    270  -
oradb2  oradev21(L)  (CL1-D , 3,  2-1) 30053  268..P-VOL PSUS,30053   272  W
oradb   oradev1(L)   (CL1-D , 3,  2)   30053  268..S-VOL PAIR, -----   266  -
oradb1  oradev1(R)   (CL1-D ,  3,  4-0) 30053  270. S-VOL PAIR, -----   268  -
```

Figure B-23 Pairdisplay for ShadowImage on HOST2 (HORCMINST)

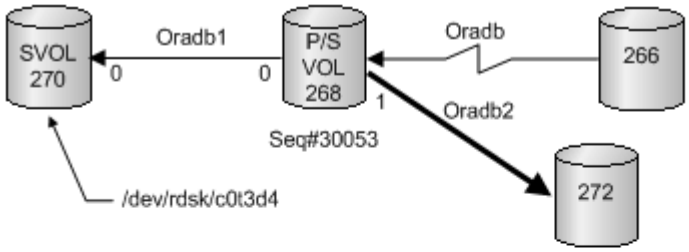


```
# pairdisplay -g oradb1 -m cas
Group   PairVol(L/R) (Port#,TID,LU-M),Seq#,LDEV#.P/S,Status, Seq#,P-LDEV# M
oradb1  oradev11(L) (CL1-D , 3,  4-0) 30053  270..S-VOL PAIR,-----   268   -
oradb2   oradev11(R) (CL1-D , 3,  2-0) 30053  268..P-VOL PAIR, 30053  270   -
oradb2   oradev21(R) (CL1-D , 3,  2-1) 30053  268..P-VOL PSUS,30053  272   W
oradb    oradev1  (R) (CL1-D , 3,  2)   30053  268..S-VOL PAIR, -----   266   -

# pairdisplay -d /dev/rdsk/c0t3d4 -m cas
Group   PairVol(L/R) (Port#,TID,LU-M),Seq#,LDEV#.P/S,Status, Seq#,P-LDEV# M
oradb1  oradev11(L) (CL1-D , 3,  4-0) 30053  270..S-VOL PAIR,-----   268   -
oradb2   oradev11(R) (CL1-D , 3,  2-0) 30053  268..P-VOL PAIR, 30053  270   -
oradb2   oradev21(R) (CL1-D , 3,  2-1) 30053  268..P-VOL PSUS,30053  272   W
oradb    oradev1  (R) (CL1-D , 3,  2)   30053  268..S-VOL PAIR, -----   266   -
```

Figure B-24 Pairdisplay for ShadowImage on HOST2 (HORCMINST0)

Index

A

AIX VIO, restrictions 1-12
alternate command devices 2-16

C

changing the user
  UNIX environment 2-4
  Windows environment 2-6
command devices
  alternate 2-16
  requirements 1-2
  setting 2-13
  virtual 2-15
components, removing 4-4
configuration examples B-19
configuration file
  cascading examples B-44
  creating 2-17
  editing 2-17
  examples B-2
  parameters 2-18
  sample file 2-17
configuration file parameters 2-18, B-3
  HORCM_ALLOW_INST B-10, B-19
  HORCM_CMD B-4
  HORCM_DEV B-10
  HORCM_INST B-13
  HORCM_INSTP B-17
  HORCM_LDEV B-18
  HORCM_LDEVG B-18
  HORCM_MON B-4
conversion tables, fibre-to-SCSI addresses A-5
creating the configuration definition file 2-17

D

definition file, configuration
  cascading examples B-44
  creating 2-17
  editing 2-17
  examples B-2
  parameters 2-18
  sample file 2-17
definition file, configuration parameters 2-18, B-3
  HORCM_ALLOW_INST B-10, B-19
  HORCM_CMD B-4
  HORCM_DEV B-10
  HORCM_INST B-13
  HORCM_INSTP B-17
  HORCM_LDEV B-18
  HORCM_LDEVG B-18
  HORCM_MON B-4

E

editing the configuration definition file 2-17
example configuration files B-2
example configurations B-19

F

FCP, z/Linux restrictions 1-9
fibre-to-SCSI address conversion
  example A-2
  table for HP-UX A-6

table for Solaris and IRIX A-6
table for Windows A-7
FICON, z/Linux restrictions 1-9

H

hardware installation 2-2
HORCM_ALLOW_INST B-10, B-19
HORCM_CMD B-4
HORCM_CONF 2-17
HORCM_DEV B-10
HORCM_INST B-13
HORCM_INSTP B-17
HORCM_LDEV B-18
HORCM_LDEVG B-18
HORCM_MON B-4
HORCMFCTBL A-3

I

In-Band command execution 2-9
installing hardware 2-2
installing software 2-3
OpenVMS environment 2-8
UNIX environment 2-3
Windows environment 2-6
interaction with storage systems 1-31
IP versions, supported platforms 1-7
IPv6, platform support 1-15

L

license key requirements 1-2
LUN configurations A-4

M

mirror descriptors
configuration file correspondence B-43

O

OpenVMS
bash start-up 1-29
DCL command examples 1-26
DCL detached process start-up 1-24
installation 2-8
known issues 1-23
requirements and restrictions 1-17
Out-of-Band command execution 2-9

P

parameters, configuration 2-18

R

removing software
components 4-4
OpenVMS environment 4-3
UNIX environment 4-2
Windows environment 4-3
requirements and restrictions
AIX VIO 1-12
OpenVMS 1-17
system 1-2
VMWare ESX Server 1-11
Windows 2008 Hyper-V 1-13
z/Linux 1-8

S

sample configuration files B-2
sample definition file 2-17
setting the command device 2-13
software installation 2-3
OpenVMS environment 2-8
UNIX environment 2-3
Windows environment 2-6
software removal
components 4-4
OpenVMS environment 4-3
UNIX environment 4-2
Windows environment 4-3
software upgrade
OpenVMS environment 3-3
UNIX environment 3-2
Windows environment 3-3
SVC, VMWare restrictions 1-12
system requirements 1-2

T

tables, fibre-to-SCSI address conversion A-5

troubleshooting 5-2

U

upgrading software
  OpenVMS environment 3-3
  UNIX environment 3-2
  Windows environment 3-3
user, changing
  UNIX environment 2-4
  Windows environment 2-6

V

virtual command devices 2-15
VM 1-6
VMWare ESX Server, restrictions 1-11

W

Windows 2008 Hyper-V, restrictions 1-13

Z

z/Linux, restrictions 1-8

Hitachi Vantara

Corporate Headquarters
2845 Lafayette Street
Santa Clara, CA 95050-2639 USA
www.HitachiVantara.com
community.HitachiVantara.com

Regional Contact Information
Americas: +1 866 374 5822 or info@hitachivantara.com
Europe, Middle East and Africa: +44 (0) 1753 618000 or info.emea@hitachivantara.com
Asia Pacific: +852 3189 7900 or info.marketing.apac@hitachivantara.com