DLP2010 Light Control EVM User's Guide

Topic Page

1 DLP2010 Light Control EVM Overview 2
2 Safety Instructions 3
3 Applicable Documents 3
4 What is in the DLP2010 Light Control EVM? 4
5 Light Engine 5
6 Quick-Start Procedure 5
7 Circuit Description 7
8 EVM Setup 8

Copyright © 2018, Texas Instruments Incorporated

1 DLP2010 Light Control EVM Overview

This user's guide presents an overview of the DLP2010 Light Control evaluation module (EVM) and a general description of the main features and functions. It will explain the first steps to get started, and provides a detailed description of the push buttons function, the on board LEDs, and the main connectors. It will help the user achieve a successful start with their first DLP2010 Light Control evaluation module.

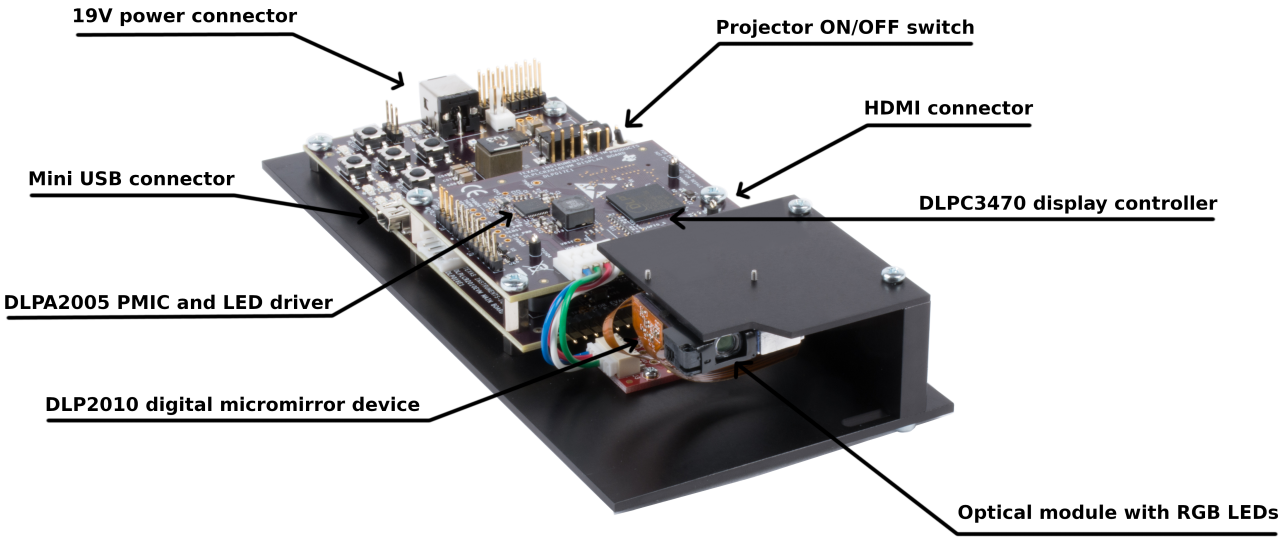

Figure 1. DLP2010 Light Control Complete EVM

Copyright © 2018, Texas Instruments Incorporated

2 Safety Instructions

CAUTION



Caution hot surface. Contact may cause burns. Do not touch.

WARNING



Possible hazardous optical radiation emitted from this product. Do not stare at the operating lamp. No user serviceable parts inside the EVM optical engine. Never open the optical engine, which can expose a risk group 2 LED which may be harmful to the eye.

WARNING



Observe handling precautions. Electrostatic sensitive devices.

3 Applicable Documents

The following documents are applicable to the DLP2010 Light Control EVM and are available on TI.com (www.ti.com).

- DLP2010 (0.2 WVGA) DMD data sheet (DLPS046B)
- DLPC3470 display and light controller data sheet (DLPS110)
- DLP Display and Light Control EVM GUI Tool User's Guide (DLPU074)

If you need assistance, refer to the DLP and MEMS TI E2E community support forums.

Copyright © 2018, Texas Instruments Incorporated

4 What is in the DLP2010 Light Control EVM?

The DLP2010 Light Control module consists of three subsystems:

- **Light engine**: Includes the optics, red, green, and blue LEDs, and the 854 × 480 (WVGA) DMD. Capable of 25 lumens out-of-the-box.
- **Driver board**: Includes the DLP chipset comprising of DLPC3470 controller and DLPA2005 PMIC/LED driver. Including a header to access Trigger IN/OUT signals for camera capture and other system control
- **System board**: Includes MSP430, ITE HDMI receiver, USB-Serial bridge controller and several connectors for external inputs (HDMI, USB etc).

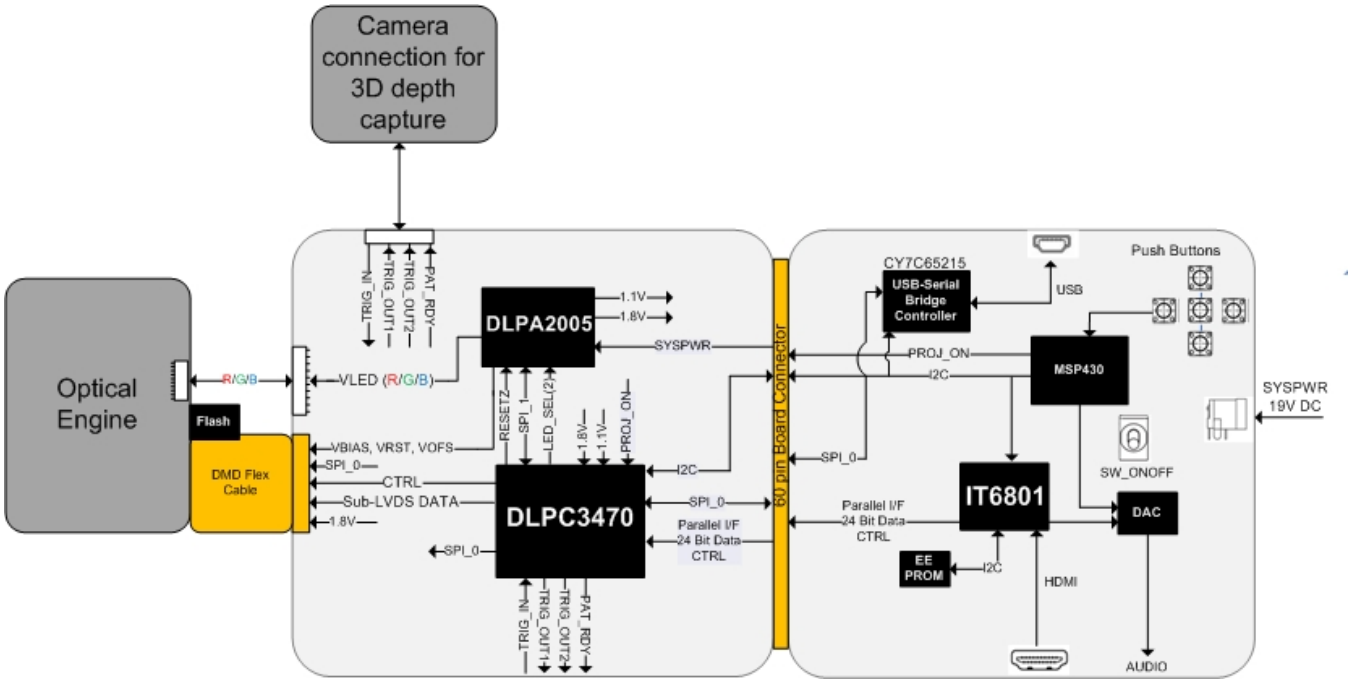

Figure 2. DLP2010 Light Control EVM Block Diagram

Copyright © 2018, Texas Instruments Incorporated

5 Light Engine

The optical engine in the EVM is developed by Asia Optics and is production ready.

The light engine consists of the following components:

- 0.2-inch WVGA DMD (DLP2010)
- OSRAM red, green, and blue LED – LE BA Q6WM and LCG H9RM

Table 1. Optical Engine Specifications

PARAMETER	MIN	TYP	MAX	UNIT
Brightness		25		lumens
LED Current		650		mA
Brightness Uniformity	75%			
Throw Ratio		1.65		
Offset		100%		

The dimensions of the optical engine are shown in Figure 3:

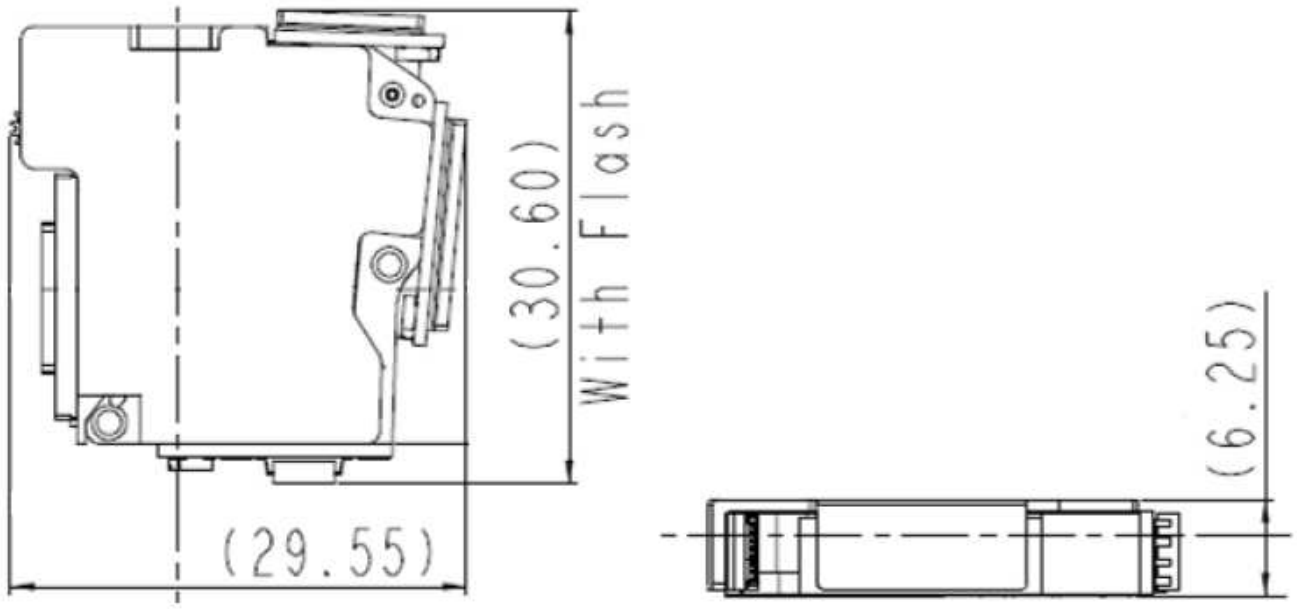

Figure 3. Dimensions of Optical Engine

6 Quick-Start Procedure

This quick-start assumes default conditions as shipped.

1. Power up the DLP2010 Light Control EVM by applying an external DC power supply (19 V DC, 3.42 A) to the J10 connector. The P5V_VIN (D5) and P3P3V_SB (D6) LED will turn on to indicate that 5-V and 3.3-V standby power is applied.
   External Power Supply Requirements:
   - Nominal output voltage: 19 VDC
   - Minimum output current: 3 A; Maximum output current: 3.42 A
   - Efficiency level: VI

   NOTE: TI recommends using an external power supply that complies with applicable regional safety standards such as UL, CSA, VDE, CCC, PSE, etc.
   NOTE: The system is designed to operate also with an external 12-V DC power supply.

Copyright © 2018, Texas Instruments Incorporated

2. Move the SW_ONOFF switch to the ON position to turn the DLP2010 Light Control EVM on. When the DLP2010 Light Control EVM is turned on, the PROJ_ON LED D3 will turn on.
3. After the DLP2010 Light Control EVM is turned on; the projector will default to displaying a DLP Light Control splash image.
4. The focus of the image can be adjusted with the focus wheel on the optical engine.

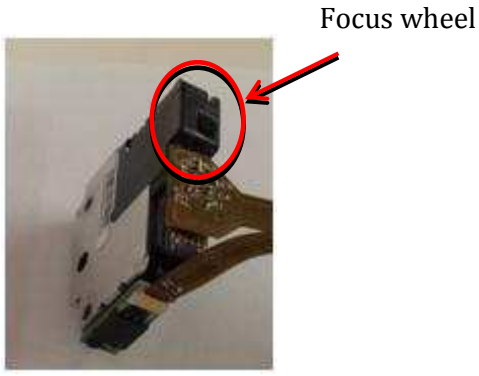

Figure 4. Optical Engine with Focus Wheel

5. Connect USB to the DLP2010 Light Control EVM and open the DLP Display and Light Control EVM Graphical User Interface (GUI) on your computer. If needed, connect an HDMI source to the EVM and communicate to the EVM over the GUI software.
6. Using the GUI, the EVM can be set into Video Display Mode or Light Control Mode. Install Jumper J11 to set Trigger IN/OUT voltage on the EVM (**jumper Is not included by default**). Refer to the GUI User's Guide for further description.
7. When turning off the projector, turn off the SW_ONOFF switch prior to removing power cable.
   Note: To avoid potential damage to the DMD, it is recommended to turn off the projector with the SW_ONOFF before disconnecting the power.
8. There are ten indicator LEDs on the DLP2010 Light Control EVM, and they are defined in Table 2:

Table 2. LEDs on the DLP2010 Light Control EVM

LED Reference	Signal Indication	Description
D1	HOST_IRQ	ON during DLPC3470 boot OFF when projector is running. Indicates DLPC3470 boot-up completed and ready to receive commands
D2	RESETZ	OFF when projector is turned on via SW_ONOFF
D3	PROJ_ON	On when projector is turned on via SW_ONOFF
D5	P5V_VIN	5-V power applied
D6	P3P3V_SB	Regulated 3V3 power on
D7	MSP2	ON when HDMI cable plugged in, and external video detected. OFF when external video is not detected.
D8	ACK	ON when Cypress CY3420 is I^2C master OFF when MSP430 is I^2C master
D9	REQ	ON when Cypress CY3420 requests the MSP430 to give Cypress master control of the I^2C bus
D10	GPIO1	Blinking when PC is communicating to flash over SPI
D11	GPIO0	Blinking when PC is communicating to DLPC3470 over I^2C

Copyright © 2018, Texas Instruments Incorporated

7 Circuit Description

7.1 Connectors, Switch and Push Buttons on Main Board

Table 3. Installed Connectors on the Main board

INSTALLED CONNECTORS/HEADERS	DESCRIPTION
J1	MSP430 JTAG programming interface connector
J2	Header for 5-V DC power (not installed by default)
J3	Connector for audio
J4	Unsupported
J5	Header for EDID programming
J6	Connector for HDMI input
J7	Header for 5-V DC power used for fan connection
J8	Unsupported
J9	60-pin connector for DLP Light Control Display board
J10	Connector for 5-V external power supply interface
J11	Header for voltage level selection for Trigger-in/out (Install jumper to receive output signal this is not included with the EVM)
J12	Header for remaining DLPC3470 test points (not installed by default)
J13	Connector for Mini-USB cable
J14	Connector for the I^2C interface (DevaSys box) (not installed by default)

Table 4. List of Installed Push Buttons and Switch on Main Board

INSTALLED SWITCHES/PUSH BUTTONS	DESCRIPTION
SW1	Projector On/OFF Switch
PB-UP1	Source Selection • First press: TPG • Second press: HDMI input • Third press: Splash screen
PB-SEL1	Cycle through displaying 7 curtain colors
PB-DOWN1	Flip image N/S or E/W
PB_LEFT1	Cycle 9 different TPG patterns after TPG source selected Cycle 4 different splash screens after splash source selected Change of volume when HDMI input is selected
PB_RIGHT1	Change LED current total 7 steps Change of volume when HDMI input is selected

7.2 Connectors on DLP2010 Light Control Display board

Table 5. Installed Connectors on the DLP2010 Light Control Display Board

INSTALLED SWITCHES/PUSH BUTTONS	DESCRIPTION
J1	Connector for the DMD flex cable
J2	Connector for LED cable
J3	Connector for selecting 3DR signal usage (Display or Light Control)
J4	Connector for Trigger-in and Triger-out for Light Control Application
J5	60-pin connector for DLP2010 Light Control Display board

Copyright © 2018, Texas Instruments Incorporated

8 EVM Setup

The DLP2010 Light Control EVM is composed of three parts:

- DLP2010 Light Control Main board
- DLP2010 Light Control Display board
- Engine with LED connection and Flex cable

The main board contains the connector for the power supply, the USB connector to communicate to the DLP2010 Light Cotnrol GUI, HDMI, audio and the connector for the DLP2010 Light Control Display board. The main board also contains the switch to turn on the projector in case the DLP2010 Light Control Display board and the engine is connected. Figure 5 shows the main connectors on the main board.

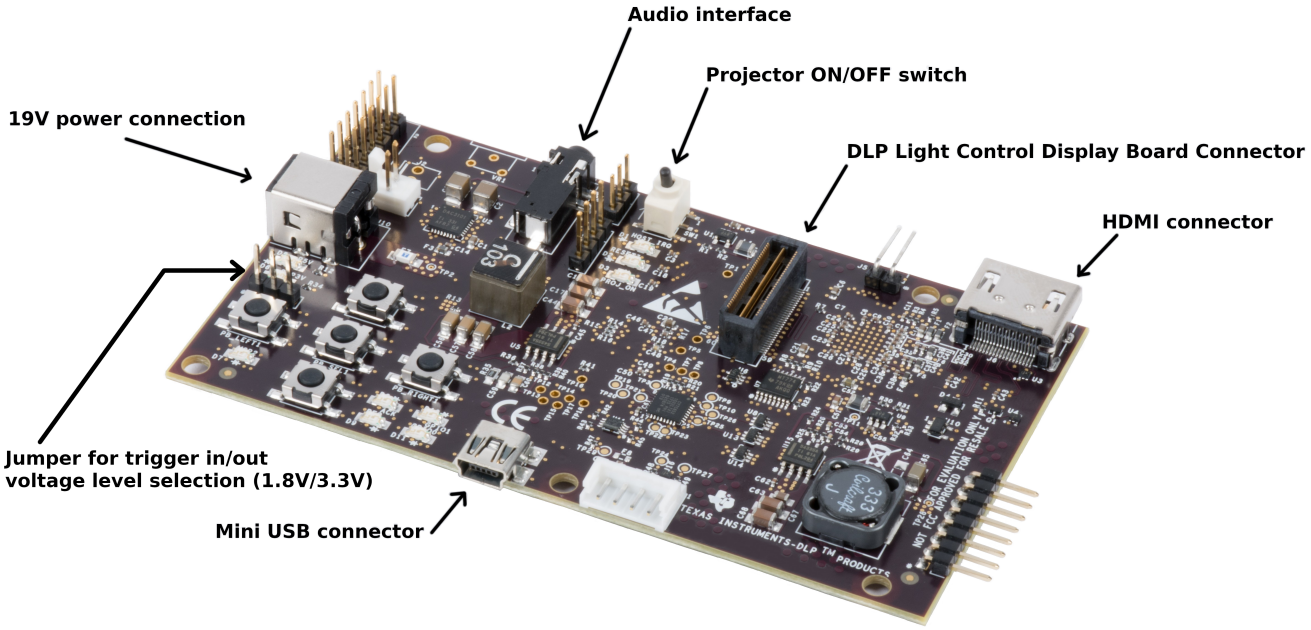

Figure 5. DLP2010 Light Control Main board

The DLP2010 Light Control Display board has three main connectors: The LED connector, the Flex cable connector, and the main board connector. The main and display board connect together via J5 and J9. Note that the main board connector J5 on the DLP2010 Light Control Display board is on the bottom, while the LED and Flex cable connectors are on the top as shown in Figure 6

Copyright © 2018, Texas Instruments Incorporated

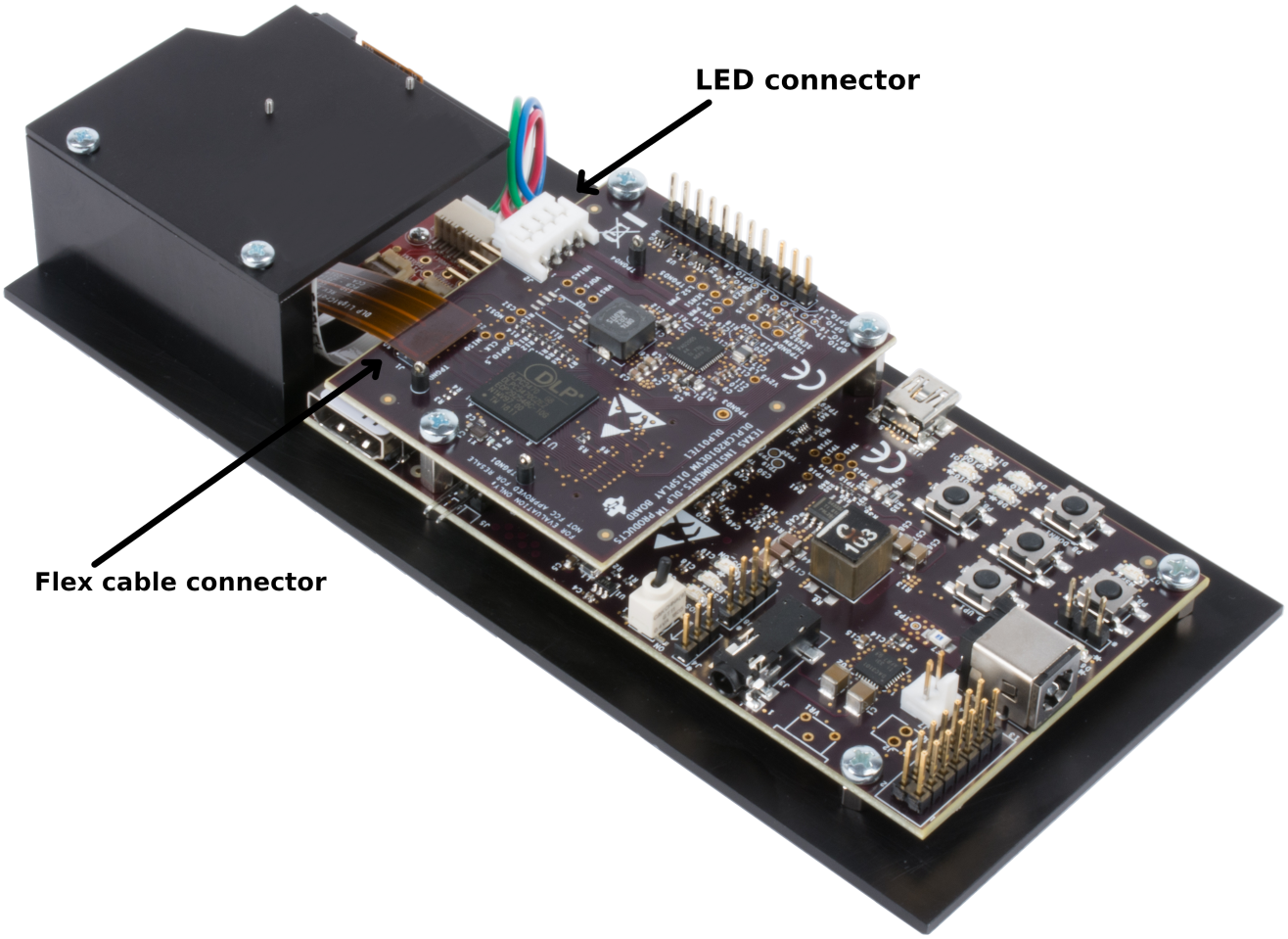

Figure 6. DLP2010 Light Control Connections

The optical engine contains the DLP2010 DMD and the flash device for the DLPC3470 which will be connected via the flex cable. The LED adapter board is connecting the three LEDs with the LED connector on the DLP2010 Light Control Display board. Refer to Figure 7 to see the proper setup.

Verify that the pin numbers matches when connecting the flex cable to the DLP2010 Light Control Display board and DMD.

To ensure the LED cables are connected correctly, use the colored circles to trace each cable to the right connection. Once again, verify that the connection is as shown in Figure 7.

Copyright © 2018, Texas Instruments Incorporated

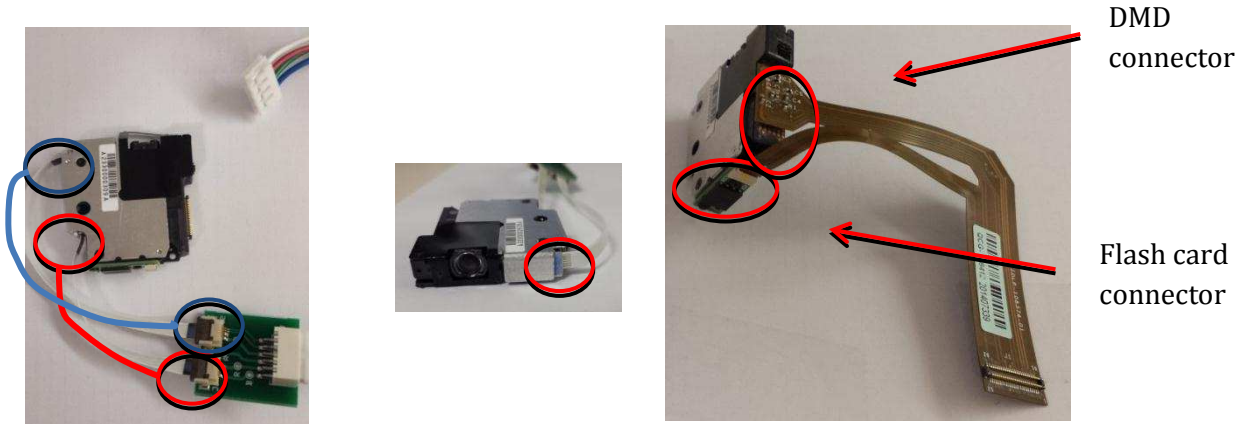

Figure 7. LED Connection and Flex Cable Connection

Figure 8 shows the final setup of all parts.

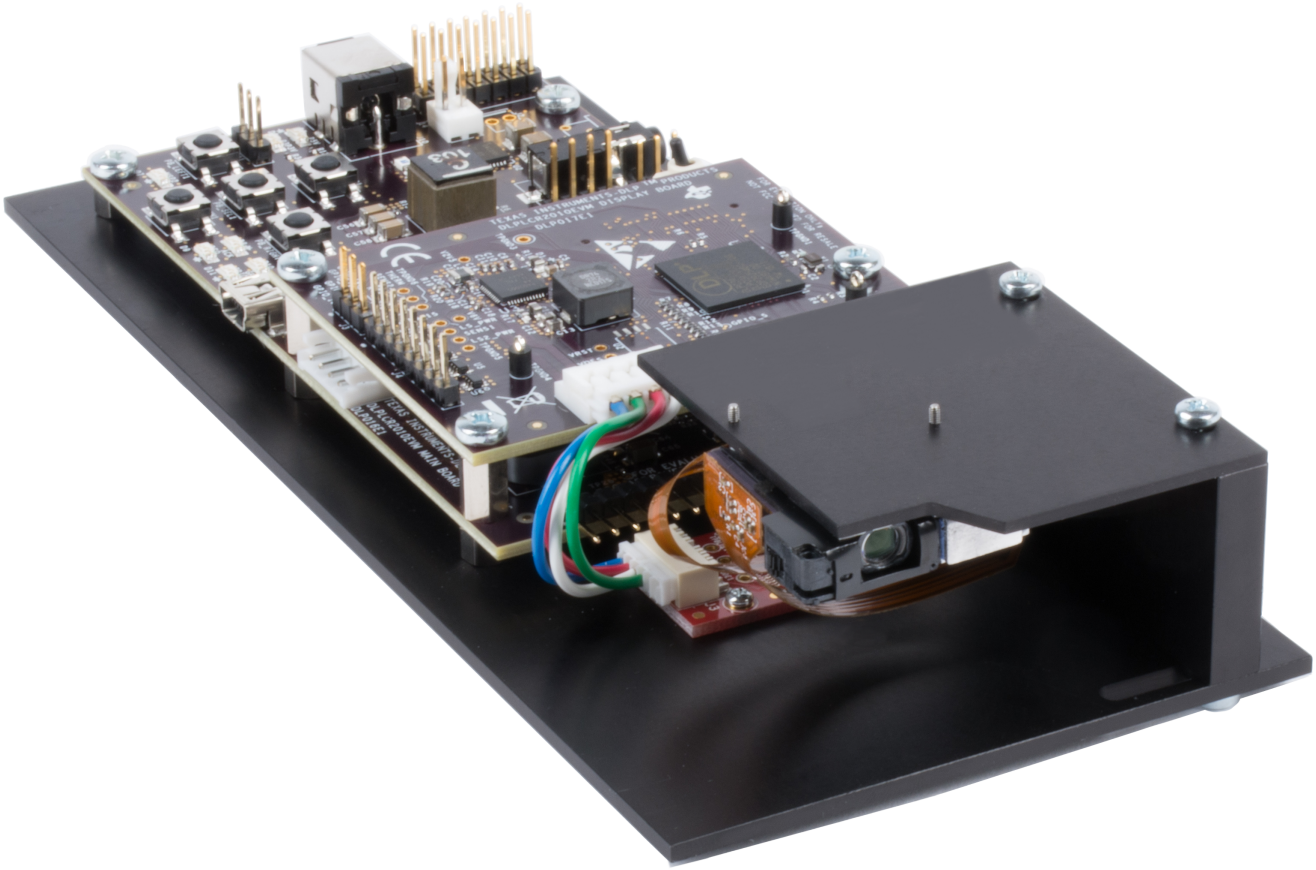

Figure 8. DLP2010 Light Control complete EVM

Ensure that everything is setup correctly before continuing. Verify that the flex cable is connected correctly to the DMD and the DLP2010 Light Control Display board.

Copyright © 2018, Texas Instruments Incorporated

IMPORTANT NOTICE FOR TI DESIGN INFORMATION AND RESOURCES

Texas Instruments Incorporated ('TI") technical, application or other design advice, services or information, including, but not limited to, reference designs and materials relating to evaluation modules, (collectively, "TI Resources") are intended to assist designers who are developing applications that incorporate TI products; by downloading, accessing or using any particular TI Resource in any way, you (individually or, if you are acting on behalf of a company, your company) agree to use it solely for this purpose and subject to the terms of this Notice.

TI's provision of TI Resources does not expand or otherwise alter TI's applicable published warranties or warranty disclaimers for TI products, and no additional obligations or liabilities arise from TI providing such TI Resources. TI reserves the right to make corrections, enhancements, improvements and other changes to its TI Resources.

You understand and agree that you remain responsible for using your independent analysis, evaluation and judgment in designing your applications and that you have full and exclusive responsibility to assure the safety of your applications and compliance of your applications (and of all TI products used in or for your applications) with all applicable regulations, laws and other applicable requirements. You represent that, with respect to your applications, you have all the necessary expertise to create and implement safeguards that (1) anticipate dangerous consequences of failures, (2) monitor failures and their consequences, and (3) lessen the likelihood of failures that might cause harm and take appropriate actions. You agree that prior to using or distributing any applications that include TI products, you will thoroughly test such applications and the functionality of such TI products as used in such applications. TI has not conducted any testing other than that specifically described in the published documentation for a particular TI Resource.

You are authorized to use, copy and modify any individual TI Resource only in connection with the development of applications that include the TI product(s) identified in such TI Resource. NO OTHER LICENSE, EXPRESS OR IMPLIED, BY ESTOPPEL OR OTHERWISE TO ANY OTHER TI INTELLECTUAL PROPERTY RIGHT, AND NO LICENSE TO ANY TECHNOLOGY OR INTELLECTUAL PROPERTY RIGHT OF TI OR ANY THIRD PARTY IS GRANTED HEREIN, including but not limited to any patent right, copyright, mask work right, or other intellectual property right relating to any combination, machine, or process in which TI products or services are used. Information regarding or referencing third-party products or services does not constitute a license to use such products or services, or a warranty or endorsement thereof. Use of TI Resources may require a license from a third party under the patents or other intellectual property of the third party, or a license from TI under the patents or other intellectual property of TI.

TI RESOURCES ARE PROVIDED "AS IS" AND WITH ALL FAULTS. TI DISCLAIMS ALL OTHER WARRANTIES OR REPRESENTATIONS, EXPRESS OR IMPLIED, REGARDING TI RESOURCES OR USE THEREOF, INCLUDING BUT NOT LIMITED TO ACCURACY OR COMPLETENESS, TITLE, ANY EPIDEMIC FAILURE WARRANTY AND ANY IMPLIED WARRANTIES OF MERCHANTABILITY, FITNESS FOR A PARTICULAR PURPOSE, AND NON-INFRINGEMENT OF ANY THIRD PARTY INTELLECTUAL PROPERTY RIGHTS.

TI SHALL NOT BE LIABLE FOR AND SHALL NOT DEFEND OR INDEMNIFY YOU AGAINST ANY CLAIM, INCLUDING BUT NOT LIMITED TO ANY INFRINGEMENT CLAIM THAT RELATES TO OR IS BASED ON ANY COMBINATION OF PRODUCTS EVEN IF DESCRIBED IN TI RESOURCES OR OTHERWISE. IN NO EVENT SHALL TI BE LIABLE FOR ANY ACTUAL, DIRECT, SPECIAL, COLLATERAL, INDIRECT, PUNITIVE, INCIDENTAL, CONSEQUENTIAL OR EXEMPLARY DAMAGES IN CONNECTION WITH OR ARISING OUT OF TI RESOURCES OR USE THEREOF, AND REGARDLESS OF WHETHER TI HAS BEEN ADVISED OF THE POSSIBILITY OF SUCH DAMAGES.

You agree to fully indemnify TI and its representatives against any damages, costs, losses, and/or liabilities arising out of your non-compliance with the terms and provisions of this Notice.

This Notice applies to TI Resources. Additional terms apply to the use and purchase of certain types of materials, TI products and services. These include; without limitation, TI's standard terms for semiconductor products http://www.ti.com/sc/docs/stdterms.htm), evaluation modules, and samples (http://www.ti.com/sc/docs/sampterms.htm).

Mailing Address: Texas Instruments, Post Office Box 655303, Dallas, Texas 75265
Copyright © 2018, Texas Instruments Incorporated