TEXAS INSTRUMENTS

TPS65140, TPS65141, TPS65145

SLVS497F – SEPTEMBER 2003 – REVISED JUNE 2016

TPS6514x Triple Output LCD Supply With Linear Regulator and Power Good

1 Features

- 2.7-V to 5.8-V Input Voltage Range
- 1.6-MHz Fixed Switching Frequency
- 3 Independent Adjustable Outputs
- Main Output up to 15 V With <1% Typical Output Voltage Accuracy
- Virtual Synchronous Converter Technology
- Negative Regulated Charge Pump Driver V_{O2}
- Positive Charge Pump Converter V_{O3}
- Auxiliary 3.3-V Linear Regulator Controller
- Internal Soft Start
- Internal Power-On Sequencing
- Fault Detection of All Outputs (TPS65140 and TPS65145)
- No Fault Detection (TPS65141)
- Thermal Shutdown
- System Power Good
- Available in 24-Pin HTSSOP and 24-Pin VQFN PowerPAD™ Packages

2 Applications

- TFT LCD Displays for Notebooks
- TFT LCD Displays for Monitors
- Portable DVD Players
- Tablet PCs
- Car Navigation Systems
- Industrial Displays

Block Diagram

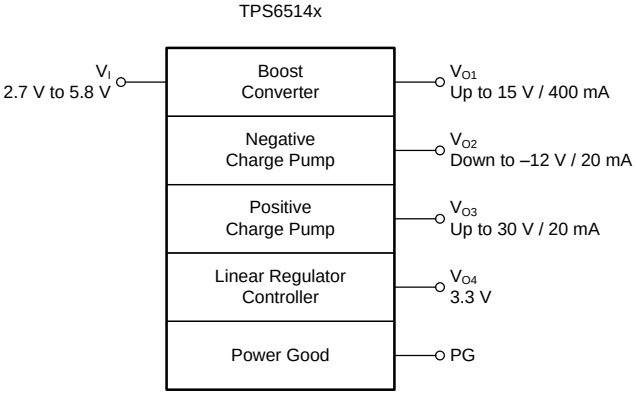

Copyright © 2016, Texas Instruments Incorporated

3 Description

The TPS6514x series offers a compact and small power supply solution to provide all three voltages required by thin film transistor (TFT) LCD displays. The auxiliary linear regulator controller can be used to generate a 3.3-V logic power rail for systems powered by a 5-V supply rail only.

The main output V_{O1} is a 1.6-MHz fixed frequency PWM boost converter providing the source drive voltage for the LCD display. The device is available in two versions with different internal switch current limits to allow the use of a smaller external inductor when lower output power is required. The TPS65140 and TPS65141 has a typical switch current limit of 2.3 A and the TPS65145 has a typical switch current limit of 1.37 A. A fully integrated adjustable charge pump doubler or tripler provides the positive LCD gate drive voltage. An externally adjustable negative charge pump provides the negative gate drive voltage. Due to the high 1.6-MHz switching frequency of the charge pumps, inexpensive and small 220-nF capacitors can be used.

Additionally, the TPS6514x series has a system power good output to indicate when all supply rails are acceptable. For LCD panels powered by 5 V the device has a linear regulator controller using an external transistor to provide a regulated 3.3-V output for the digital circuits. For maximum safety, the TPS65140 and TPS65145 goes into shutdown as soon as one of the outputs is out of regulation. The device can be enabled again by toggling the input or the enable (EN) pin to GND. The TPS65141 does not enter shutdown when one of its outputs is below its power good threshold.

Device Information[1]

PART NUMBER	PACKAGE	BODY SIZE (NOM)
TPS6514x	HTSSOP (24)	7.80 mm × 4.40 mm
	VQFN (24)	4.00 mm × 4.00 mm

(1) For all available packages, see the orderable addendum at the end of the data sheet.

An IMPORTANT NOTICE at the end of this data sheet addresses availability, warranty, changes, use in safety-critical applications, intellectual property matters and other important disclaimers. PRODUCTION DATA.

Table of Contents

1 Features ... 1
2 Applications ... 1
3 Description ... 1
4 Revision History ... 2
5 Pin Configuration and Functions ... 3
6 Specifications ... 4
6.1 Absolute Maximum Ratings ... 4
6.2 ESD Ratings ... 4
6.3 Recommended Operating Conditions ... 4
6.4 Thermal Information ... 5
6.5 Electrical Characteristics ... 5
6.6 Dissipation Ratings ... 7
6.7 Typical Characteristics ... 7
7 Detailed Description ... 8
7.1 Overview ... 8
7.2 Functional Block Diagram ... 9
7.3 Feature Description ... 10
7.4 Device Functional Modes ... 11
8 Application and Implementation ... 12
8.1 Application Information ... 12
8.2 Typical Application ... 12
8.3 System Examples ... 21
9 Power Supply Recommendations ... 22
10 Layout ... 23
10.1 Layout Guidelines ... 23
10.2 Layout Example ... 23
10.3 Thermal Considerations ... 23
11 Device and Documentation Support ... 24
11.1 Device Support ... 24
11.2 Documentation Support ... 24
11.3 Related Links ... 24
11.4 Receiving Notification of Documentation Updates 24
11.5 Community Resources ... 24
11.6 Trademarks ... 24
11.7 Electrostatic Discharge Caution ... 24
11.8 Glossary ... 25
12 Mechanical, Packaging, and Orderable Information ... 25

4 Revision History

NOTE: Page numbers for previous revisions may differ from page numbers in the current version.

Changes from Revision E (November 2012) to Revision F **Page**

- Added *ESD Ratings* table, *Thermal Information* table, *Feature Description* section, *Device Functional Modes* section, *Application and Implementation* section, *Power Supply Recommendations* section, *Layout* section, *Device and Documentation Support* section, and *Mechanical, Packaging, and Orderable Information* section ... 1
- Deleted *Ordering Information* table; see POA at the end of the data sheet ... 1
- Changed typical value of V_{REF} to 1.213 V from 1.13 V ... 5
- Moved Figure 12 through Figure 23 from *Typical Applications* to *Application Curves* ... 19

Copyright © 2003–2016, Texas Instruments Incorporated

5 Pin Configuration and Functions

PWP Package
24-Pin HTSSOP
Top View

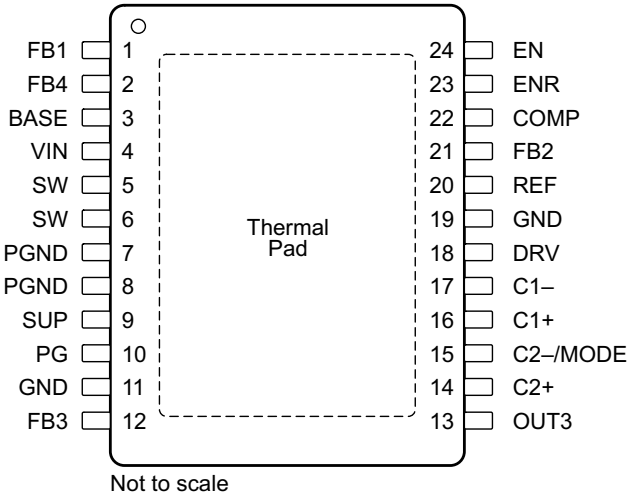

Not to scale

RGE Package
24-Pin VQFN
Top View

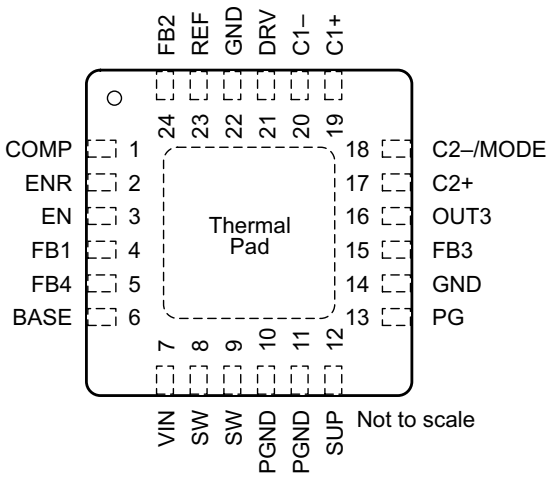

Not to scale

Pin Functions

PIN			I/O	DESCRIPTION
NAME	NO.			
	HTSSOP	VQFN		
BASE	3	6	O	Base drive output for the external transistor
C1+	16	19	—	Positive terminal of the charge pump flying capacitor
C1–	17	20	—	Negative terminal of the charge pump flying capacitor
C2+	14	17	—	Positive terminal for the charge pump flying capacitor. If the device runs in voltage doubler mode, this pin must be left open.
C2–/MODE	15	18	—	Negative terminal of the charge pump flying capacitor and charge pump MODE pin. If the flying capacitor is connected to this pin, the converter operates in a voltage tripler mode. If the charge pump must operate in a voltage doubler mode, the flying capacitor is removed and the C2-/MODE pin must be connected to GND.
COMP	22	1	—	Compensation pin for the main boost converter. A small capacitor is connected to this pin.
DRV	18	21	O	External charge pump driver
EN	24	3	I	Enable pin of the device. This pin must be terminated and not be left floating. A logic high enables the device and a logic low shuts down the device.
ENR	23	2	I	Enable pin of the linear regulator controller. This pin must be terminated and not be left floating. Logic high enables the regulator and a logic low puts the regulator in shutdown.
FB1	1	4	I	Feedback pin of the boost converter
FB2	21	24	I	Feedback pin of negative charge pump
FB3	12	15	I	Feedback pin of positive charge pump
FB4	2	5	I	Feedback pin of the linear regulator controller. The linear regulator controller is set to a fixed output voltage of 3.3 V or 3 V depending on the version.
GND	11, 19	14, 22	—	Ground
OUT3	13	16	O	Positive charge pump output
PG	10	13	O	Open-drain output indicating when all outputs V_{O1}, V_{O2}, V_{O3} are within 10% of their nominal output voltage. The output goes low when one of the outputs falls below 10% of their nominal output voltage.
PGND	7, 8	10, 11	—	Power ground
PowerPAD / Thermal Die	—	—	—	The PowerPAD or exposed thermal die must be connected to power ground pins (PGND)
REF	20	23	O	Internal reference output typically 1.23 V

Copyright © 2003–2016, Texas Instruments Incorporated

Pin Functions (continued)

PIN			I/O	DESCRIPTION
NAME	NO.			
	HTSSOP	VQFN		
SUP	9	12	I	Supply pin of the positive, negative charge pump, boost converter, and gate drive circuit. This pin must be connected to the output of the main boost converter and cannot be connected to any other voltage source. For performance reasons, TI does not recommend connecting a bypass capacitor directly to this pin.
SW	5, 6	8, 9	I	Switch pin of the boost converter
VIN	4	7	I	Input voltage pin of the device.

6 Specifications

6.1 Absolute Maximum Ratings

over operating free-air temperature range (unless otherwise noted)(1)

	MIN	MAX	UNIT
Voltages on pin VIN(2)	–0.3	6	V
Voltages on pin V_O1, SUP, PG (2)	–0.3	15.5	V
Voltages on pin EN, MODE, ENR(2)	–0.3	V_I+ 0.3	V
Voltage on pin SW(2)		20	V
Power good maximum sink current (PG)		1	mA
Continuous power dissipation	See *Dissipation Ratings*		
Lead temperature (soldering, 10 s)		260	°C
Operating junction temperature, T_J	–40	150	°C
Storage temperature, T_{stg}	–65	150	°C

(1) Stresses beyond those listed under *Absolute Maximum Ratings* may cause permanent damage to the device. These are stress ratings only, which do not imply functional operation of the device at these or any other conditions beyond those indicated under *Recommended Operating Conditions*. Exposure to absolute-maximum-rated conditions for extended periods may affect device reliability.
(2) All voltage values are with respect to network ground terminal.

6.2 ESD Ratings

			VALUE	UNIT
$V_{(ESD)}$	Electrostatic discharge	Human-body model (HBM), per ANSI/ESDA/JEDEC JS-001(1)	±2000	V
		Charged-device model (CDM), per JEDEC specification JESD22-C101(2)	±500	

(1) JEDEC document JEP155 states that 500-V HBM allows safe manufacturing with a standard ESD control process.
(2) JEDEC document JEP157 states that 250-V CDM allows safe manufacturing with a standard ESD control process.

6.3 Recommended Operating Conditions

		MIN	NOM	MAX	UNIT
V_I	Input voltage	2.7		5.8	V
L	Inductor(1)		4.7		µH
T_A	Operating ambient temperature	–40		85	°C
T_J	Operating junction temperature	–40		125	°C

(1) See the application information section for further information.

Copyright © 2003–2016, Texas Instruments Incorporated

6.4 Thermal Information

THERMAL METRIC[1]		TPS6514x		UNIT
		PWP (HTSSOP)	RGE (VQFN)	
		24 PINS	24 PINS	
$R_{\theta JA}$	Junction-to-ambient thermal resistance	37.2	34.2	°C/W
$R_{\theta JC(top)}$	Junction-to-case (top) thermal resistance	18.9	35.5	°C/W
$R_{\theta JB}$	Junction-to-board thermal resistance	16.4	11.7	°C/W
ψ_{JT}	Junction-to-top characterization parameter	0.4	0.4	°C/W
ψ_{JB}	Junction-to-board characterization parameter	16.2	11.7	°C/W
$R_{\theta JC(bot)}$	Junction-to-case (bottom) thermal resistance	2.1	3.2	°C/W

(1) For more information about traditional and new thermal metrics, see the *Semiconductor and IC Package Thermal Metrics* application report.

6.5 Electrical Characteristics

V_I = 3.3 V, EN = VIN, V_{O1} = 10 V, T_A= –40°C to 85°C, typical values are at T_A = 25°C (unless otherwise noted)

PARAMETER		TEST CONDITIONS	MIN	TYP	MAX	UNIT
SUPPLY CURRENT						
V_I	Input voltage		2.7		5.5	V
I_Q	Quiescent current into VIN	ENR = GND, V_{O3} = 2 × V_{O1}, Boost converter not switching		0.7	0.9	mA
$I_{QCharge}$	Charge pump quiescent current into SUP	V_{O1} = SUP = 10 V, V_{O3} = 2 × V_{O1}		1.7	2.7	mA
		V_{O1} = SUP = 10 V, V_{O3} = 3 × V_{O1}		3.9	6	
I_{QEN}	LDO controller quiescent current into VIN	ENR = VIN, EN = GND		300	800	µA
I_{SD}	Shutdown current into VIN	EN = ENR = GND		1	10	µA
V_{UVLO}	Undervoltage lockout threshold	V_I falling		2.2	2.4	V
	Thermal shutdown	Temperature rising		160		°C
LOGIC SIGNALS EN, ENR						
V_{IH}	High level input voltage		1.5			V
V_{IL}	Low level input voltage				0.4	V
I_I	Input leakage current	EN = GND or VIN		0.01	0.1	µA
MAIN BOOST CONVERTER						
V_{O1}	Output voltage		5		15	V
V_{O1} – VIN	Minimum input to output voltage difference		1			V
V_{REF}	Reference voltage		1.205	1.213	1.219	V
V_{FB}	Feedback regulation voltage		1.136	1.146	1.154	V
I_{FB}	Feedback input bias current			10	100	nA
$r_{DS(on)}$	N-MOSFET ON-resistance (Q1)	V_{O1} = 10 V, I_{SW} = 500 mA		195	290	mΩ
		V_{O1} = 5 V, I_{SW} = 500 mA		285	420	
I_{LIM}	N-MOSFET switch current limit (Q1)	TPS65140, TPS65141	1.6	2.3	2.6	A
		TPS65145	0.96	1.37	1.56	A
$r_{DS(on)}$	P-MOSFET ON-resistance (Q2)	V_{O1} = 10 V, I_{SW} = 100 mA		9	15	Ω
		V_{O1} = 5 V, I_{SW} = 100 mA		14	22	
I_{MAX}	Maximum P-MOSFET peak switch current				1	A
I_{LEAK}	Switch leakage current	V_{SW} = 15 V		1	10	µA
f_{SW}	Oscillator frequency	0°C ≤ T_A ≤ 85°C	1.295	1.6	2.1	MHz
		–40°C ≤ T_A ≤ 85°C	1.191	1.6	2.1	

Copyright © 2003–2016, Texas Instruments Incorporated

Electrical Characteristics (continued)

V_I = 3.3 V, EN = VIN, V_{O1} = 10 V, T_A= –40°C to 85°C, typical values are at T_A = 25°C (unless otherwise noted)

PARAMETER		TEST CONDITIONS	MIN	TYP	MAX	UNIT
	Line regulation	2.7 V ≤ V_I ≤ 5.7 V; I_{LOAD} = 100 mA		0.012		%/V
	Load regulation	0 mA ≤ I_O ≤ 300 mA		0.2		%/A
NEGATIVE CHARGE PUMP V_{O2}						
V_{O2}	Output voltage		–2			V
V_{REF}	Reference voltage		1.205	1.213	1.219	V
V_{FB}	Feedback regulation voltage		–36	0	36	mV
I_{FB}	Feedback input bias current			10	100	nA
$r_{DS(on)}$	Q8 P-Channel switch $r_{DS(on)}$	I_O = 20 mA		4.3	8	Ω
	Q9 N-Channel switch $r_{DS(on)}$			2.9	4.4	
I_O	Maximum output current		20			mA
	Line regulation	7 V ≤ V_{O1} ≤ 15 V, I_{LOAD} = 10 mA, V_{O2} = –5 V		0.09		%/V
	Load regulation	1 mA ≤ I_O ≤ 20 mA, V_{O2} = –5 V		0.126		%/mA
POSITIVE CHARGE PUMP V_{O3}						
V_{O3}	Output voltage				30	V
V_{REF}	Reference voltage		1.205	1.213	1.219	V
V_{FB}	Feedback regulation voltage		1.187	1.214	1.238	V
I_{FB}	Feedback input bias current			10	100	nA
$r_{DS(on)}$	Q3 P-Channel switch $r_{DS(on)}$	I_O = 20 mA		9.9	15.5	Ω
	Q4 N-Channel switch $r_{DS(on)}$			1.1	1.8	
	Q5 P-Channel switch $r_{DS(on)}$			4.6	8.5	
	Q6 N-Channel switch $r_{DS(on)}$			1.2	2.2	
V_D	D1 – D4 Shottky diode forward voltage	I_{D1-D4} = 40 mA		610	720	mV
I_O	Maximum output current		20			mA
	Line regulation	10 V ≤ V_{O1} ≤ 15 V, I_{LOAD} = 10 mA, V_{O3} = 27 V		0.56		%/V
	Load regulation	1 mA ≤ I_O ≤ 20 mA, V_{O3} = 27 V		0.05		%/mA
LINEAR REGULATOR CONTROLLER V_{O4}						
V_{O4}	Output voltage	4.5 V ≤ V_I ≤ 5.5 V; 10 mA ≤ I_O ≤ 500 mA	3.2	3.3	3.4	V
I_{BASE}	Maximum base drive current	$V_{IN} – V_{O4} – V_{BE}$ ≥ 0.5 V (1)	13.5	19		mA
		$V_{IN} – V_{O4} – V_{BE}$ ≥ 0.75 V (1)	20	27		
	Line regulation	4.75 V ≤ V_I ≤ 5.5 V, I_{LOAD} = 500 mA		0.186		%/V
	Load regulation	1 mA ≤ I_O ≤ 500 mA, V_I = 5 V		0.064		%/A
	Start-up current	V_{O4} ≤ 0.8 V	11	20	25	mA

(1) With V_I = supply voltage of the TPS6514x, V_{O4} = output voltage of the regulator, V_{BE} = basis emitter voltage of external transistor.

Copyright © 2003–2016, Texas Instruments Incorporated

Electrical Characteristics (continued)

V_I = 3.3 V, EN = VIN, V_{O1} = 10 V, T_A= –40°C to 85°C, typical values are at T_A = 25°C (unless otherwise noted)

PARAMETER		TEST CONDITIONS	MIN	TYP	MAX	UNIT
SYSTEM POWER GOOD (PG)						
V(PG, V_{O1})	Power good threshold(2)		–12	–8.75% V_{O1}	–6	V
V(PG, V_{O2})			–13	–9.5% V_{O2}	–5	V
V(PG, V_{O3})			–11	–8% V_{O3}	–5	V
VOL	PG output low voltage	$I_{(sink)}$ = 500 µA			0.3	V
IL	PG output leakage current	VPG = 5 V		0.001	1	µA

(2) The power good goes high when all 3 outputs (V_{O1}, V_{O2}, V_{O3}) are above their threshold. The power good goes low as soon as one of the outputs is below their threshold.

6.6 Dissipation Ratings

PACKAGE	$R_{\theta JA}$	TA ≤ 25°C POWER RATING	TA = 70°C POWER RATING	TA = 85°C POWER RATING
24-Pin TSSOP	30.13 C°/W (PWP soldered)	3.3 W	1.83 W	1.32 W
24-Pin VQFN	30 C°/W	3.3 W	1.8 W	1.3 W

6.7 Typical Characteristics

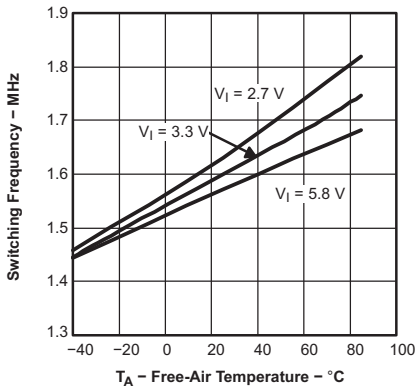

Figure 1. Switching Frequency vs Free-Air Temperature

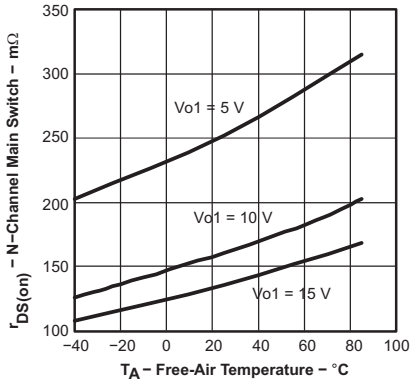

Figure 2. $r_{DS(on)}$ N-Channel Main Switch vs Free-Air Temperature

Copyright © 2003–2016, Texas Instruments Incorporated

7 Detailed Description

7.1 Overview

The TPS6514x series consists of a main boost converter operating with a fixed switching frequency of 1.6 MHz to allow for small external components. The boost converter output voltage V_{O1} is also the input voltage, connected through the pin SUP, for the positive and negative charge pump. The linear regulator controller is independent from this system with its own enable pin. This allows the linear regulator controller to continue to operate while the other supply rails are disabled or in shutdown due to a fault condition on one of their outputs. See *Functional Block Diagram* for more information.

Copyright © 2003–2016, Texas Instruments Incorporated

7.2 Functional Block Diagram

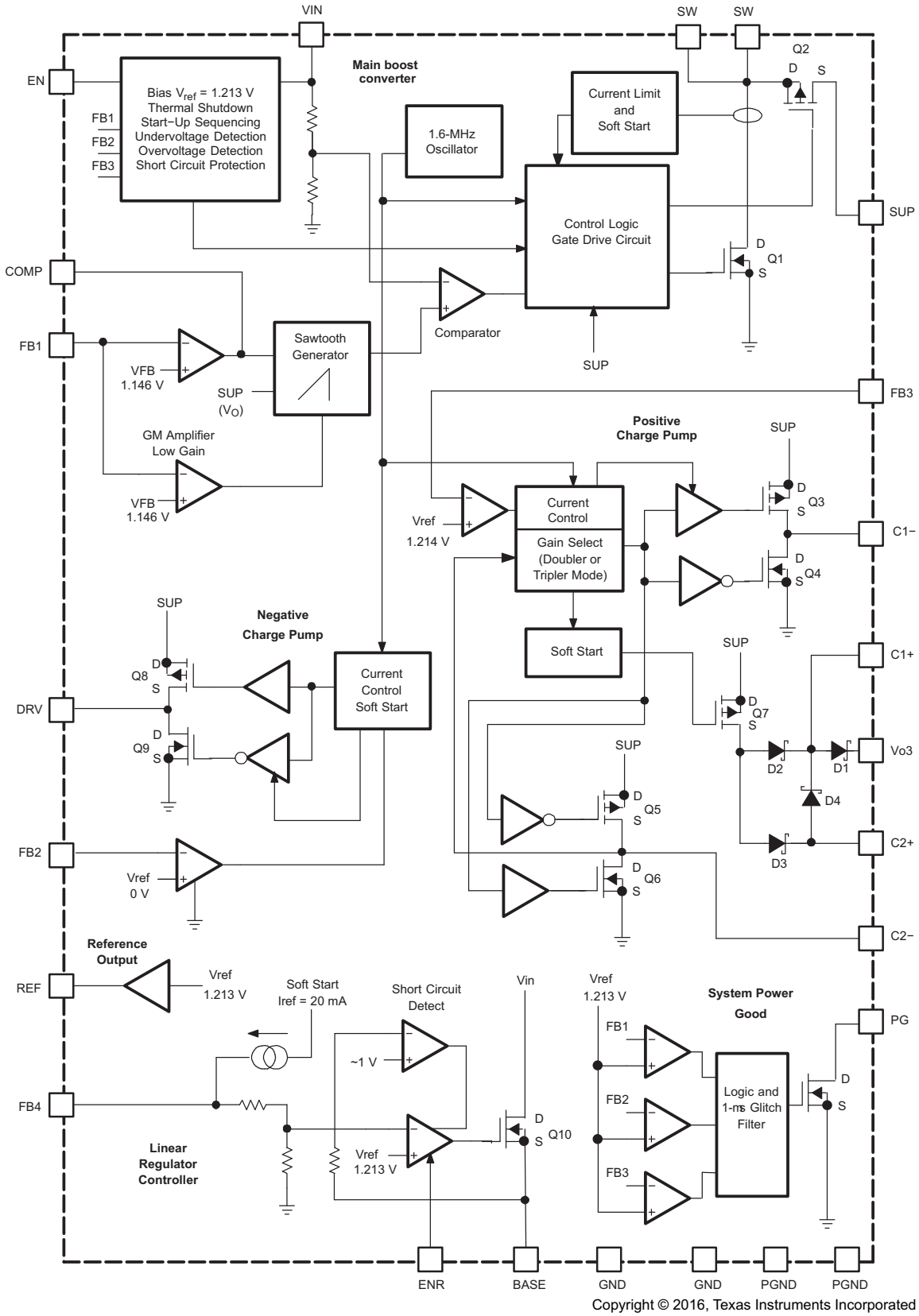

Copyright © 2016, Texas Instruments Incorporated

7.3 Feature Description

7.3.1 Main Boost Converter

The main boost converter operates with PWM and a fixed switching frequency of 1.6 MHz. The converter uses a unique fast response, voltage mode controller scheme with input voltage feedforward. This achieves excellent line and load regulation (0.2% A load regulation typical) and allows the use of small external components. To add higher flexibility to the selection of external component values, the device uses external loop compensation. Although the boost converter looks like a nonsynchronous boost converter topology operating in discontinuous mode at light load, the TPS6514x series maintains continuous conduction even at light load currents. This is accomplished using the Virtual Synchronous Converter Technology for improved load transient response. This architecture uses an external Schottky diode and an integrated MOSFET in parallel connected between SW and SUP (see *Functional Block Diagram*). The integrated MOSFET Q2 allows the inductor current to become negative at light load conditions. For this purpose, a small integrated P-channel MOSFET with typically 10-Ω $r_{DS(on)}$ is sufficient. When the inductor current is positive, the external Schottky diode with the lower forward voltage conducts the current. This causes the converter to operate with a fixed frequency in continuous conduction mode over the entire load current range. This avoids the ringing on the switch pin as seen with a standard nonsynchronous boost converter and allows a simpler compensation for the boost converter.

7.3.2 Power Good Output

The TPS6514x series has an open-drain power good output with a maximum sink capability of 1 mA. The power good output goes high as soon as the main boost converter V_{O1} and the negative and the positive charge pumps are within regulation. The power good output goes low as soon as one of the outputs is out of regulation. In this case, the device goes into shutdown at the same time. See *Electrical Characteristics* for the power good thresholds.

7.3.3 Enable and Power-On Sequencing (EN, ENR)

The device has two enable pins. These pins must be terminated and not left floating to prevent faulty operation. Pulling the enable pin (EN) high enables the device and starts the power-on sequencing with the main boost converter V_{O1} coming up first, then the negative and positive charge pump. The linear regulator has an independent enable pin (ENR). Pulling this pin low disables the regulator, and pulling this pin high enables this regulator.

If the enable pin (EN) is pulled high, the device starts its power-on sequencing. The main boost converter starts up first with its soft start. If the output voltage reaches 91.25% of its output voltage, the negative charge pump comes up next. The negative charge pump starts with a soft start and when the output voltage reaches 91% of the nominal value, the positive charge pump comes up with the soft start. Pulling the enable pin low shuts down the device. Dependent on load current and output capacitance, each of the outputs comes down.

7.3.4 Positive Charge Pump

The TPS6514x series has a fully regulated integrated positive charge pump generating V_{O3}. The input voltage for the charge pump is applied to the SUP pin that is equal to the output of the main boost converter V_{O1}. The charge pump is capable of supplying a minimum load current of 20 mA. Higher load currents are possible depending on the voltage difference between V_{O1} and V_{O3}. See Figure 22 and Figure 23.

7.3.5 Negative Charge Pump

The TPS6514x series has a regulated negative charge pump using two external Schottky diodes. The input voltage for the charge pump is applied to the SUP pin that is connected to the output of the main boost converter V_{O1}. The charge pump inverts the main boost converter output voltage and is capable of supplying a minimum load current of 20 mA. Higher load currents are possible depending on the voltage difference between V_{O1} and V_{O2}. See Figure 21.

7.3.6 Linear Regulator Controller

The TPS6514x series includes a linear regulator controller to generate a 3.3-V rail which is useful when the system is powered from a 5-V supply. The regulator is independent from the other voltage rails of the device and has its own enable (ENR). Because most of the systems require this voltage rail to come up first, TI recommends using a R-C delay on EN. This delays the start-up of the main boost converter which reduces the inrush current as well.

Copyright © 2003–2016, Texas Instruments Incorporated

Feature Description (continued)

7.3.7 Soft Start

The main boost converter as well as the charge pumps and linear regulator have an internal soft start. This avoids heavy voltage drops at the input voltage rail or at the output of the main boost converter V_{O1} during start-up. See Figure 19 and Figure 20. During soft start of the main boost converter V_{O1}, the internal current limit threshold is increased in three steps. The device starts with the first step where the current limit is set to 2/5 of the typical current limit (2/5 of 2.3 A) for 1024 clock cycles then increased to 3/5 of the current limit for 1024 clock cycles and the 3rd step is the full current limit. The TPS65141 has an extended soft-start time where each step is 2048 clock cycles.

7.3.8 Fault Protection

All of the outputs of the TPS65140 and TPS65145 have short-circuit detection and cause the device to go into shutdown. The TPS65141, as an exception, does not enter shutdown in case one of the outputs falls below its power good threshold. The main boost converter has overvoltage and undervoltage protection. If the output voltage V_{O1} rises above the overvoltage protection threshold of typically 5% of V_{O1}, then the device stops switching, but remains operational. When the output voltage falls below this threshold, the converter continues operation. When the output voltage falls below the undervoltage protection threshold of typically 8.75% of V_{O1}, because of a short-circuit condition, the TPS65140 and TPS65145 goes into shutdown. Because there is a direct pass from the input to the output through the diode, the short-circuit condition remains. If this condition must be avoided, a fuse at the input or an output disconnect using a single transistor and resistor is required. The negative and positive charge pumps have an undervoltage lockout (UVLO) to protect the LCD panel of possible latch-up conditions due to a short-circuit condition or faulty operation. When the negative output voltage is typically above 9.5% of its output voltage (closer to ground), then the device enters shutdown. When the positive charge pump output voltage, V_{O3}, is below 8% typical of its output voltage, the device goes into shutdown. See the fault protection thresholds in *Electrical Characteristics*. The device is enabled by toggling the enable pin (EN) below 0.4 V or by cycling the input voltage below the UVLO of 1.7 V. The linear regulator reduces the output current to 20 mA typical under a short-circuit condition when the output voltage is typically < 1 V. See *Functional Block Diagram*. The linear regulator does not go into shutdown under a short-circuit condition.

7.3.9 Thermal Shutdown

A thermal shutdown is implemented to prevent damage due to excessive heat and power dissipation. Typically, the thermal shutdown threshold is 160°C. If this temperature is reached, the device goes into shutdown. The device can be enabled by toggling the enable pin to low and back to high or by cycling the input voltage to GND and back to V_I again.

7.4 Device Functional Modes

7.4.1 Enabling and Disabling the Device

The TPS6514x turns on when the input voltage is higher than V_{UVLO} and the enable pin EN is pulled to HIGH. The device goes into shutdown and all its function apart from the linear regulator are disabled if one of these conditions is present:

- enable pin EN is pulled to LOW
- V_{O1}, V_{O2}, or V_{O3} is out of regulation (only for TPS65140 and TPS65145)

Copyright © 2003–2016, Texas Instruments Incorporated

8 Application and Implementation

NOTE

Information in the following applications sections is not part of the TI component specification, and TI does not warrant its accuracy or completeness. TI's customers are responsible for determining suitability of components for their purposes. Customers should validate and test their design implementation to confirm system functionality.

8.1 Application Information

The TPS6514x devices have been designed to provide the input supply voltages for the source drivers and gate drivers in LCD displays. Additionally, they include a linear regulator controller that can be used with an external transistor to provide a regulated 3.3-V output for the digital circuits for LCD panels powered by a 5-V supply rail.

8.2 Typical Application

Figure 3 shows a typical application circuit for a monitor display powered from a 5-V supply. It generates up to 350 mA at 15 V to power the source drivers, and 20 mA at 30 V and –12 V to power the gate drivers.

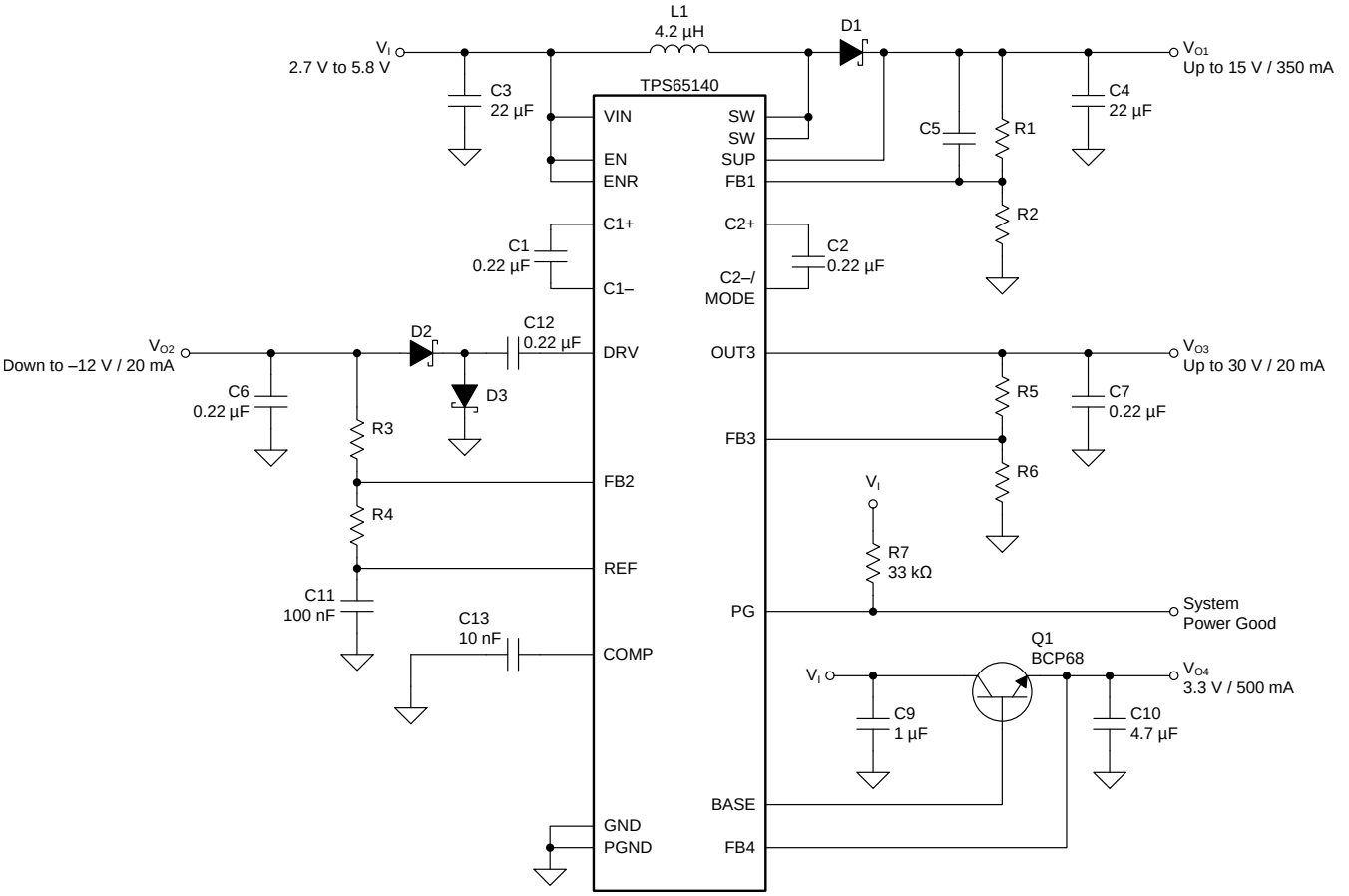

Copyright © 2016, Texas Instruments Incorporated

Figure 3. Typical Application Schematic

Copyright © 2003–2016, Texas Instruments Incorporated

Typical Application (continued)

8.2.1 Design Requirements

Table 1 shows the design parameters for this example.

Table 1. Design Requirements

PARAMETER		VALUE
V_I	Input supply voltage	2.7 V to 5.8 V
V_{O1}	Boost converter output voltage and current	Up to 15 V at 350 mA
V_{O3}	Positive charge pump output voltage and current	Up to 30 V at 20 mA
V_{O2}	Negative charge pump output voltage and current	Down to –12 V at 20 mA
V_{O4}	Linear regulator controller output voltage and current	3.3 V at 500 mA

8.2.2 Detailed Design Procedure

8.2.2.1 Boost Converter Design Procedure

The first step in the design procedure is to calculate the maximum possible output current of the main boost converter under certain input and output voltage conditions. The following is an example for a 3.3-V to 10-V conversion:

VIN = 3.3 V, V_{OUT} = 10 V, Switch voltage drop V_{SW} = 0.5 V, Schottky diode forward voltage V_D = 0.8 V

1. Duty cycle:

$$D = \frac{V_{OUT} - V_D + V_{IN}}{V_{OUT} - V_D + V_{SW}} = \frac{10\ V - 0.8\ V + 3.3\ V}{10\ V - 0.8\ V + 0.5\ V} = 0.73 \quad (1)$$

2. Average inductor current:

$$I_L = \frac{I_{OUT}}{1 - D} = \frac{300\ mA}{1 - 0.73} = 1.11\ A \quad (2)$$

3. Inductor peak-to-peak ripple current:

$$\Delta I_L = \frac{(V_{IN} - V_{SW}) \times D}{f_S \times L} = \frac{(3.3\ V - 0.5\ V) \times 0.73}{1.6\ MHz \times 4.2\ \mu H} = 304\ mA \quad (3)$$

4. Peak switch current:

$$I_{SWPeak} = I_L + \frac{\Delta I_L}{2} = 1.11\ A + \frac{304\ mA}{2} = 1.26\ A \quad (4)$$

The integrated switch, the inductor, and the external Schottky diode must be able to handle the peak switch current. The calculated peak switch current must be equal to or lower than the minimum N-MOSFET switch current limit as specified in *Electrical Characteristics* (1.6 A for the TPS65140 and TPS65141 and 0.96 A for the TPS65145). If the peak switch current is higher, then the converter cannot support the required load current. This calculation must be done for the minimum input voltage where the peak switch current is highest. The calculation includes conduction losses like switch $r_{DS(on)}$ (0.5 V) and diode forward drop voltage losses (0.8 V). Additional switching losses, inductor core and winding losses, and so forth, require a slightly higher peak switch current in the actual application. The above calculation still allows for a good design and component selection.

8.2.2.1.1 Inductor Selection

Several inductors work with the TPS6514x. Especially with the external compensation, the performance can be adjusted to the specific application requirements. The main parameter for the inductor selection is the saturation current of the inductor which must be higher than the peak switch current as calculated above with additional margin to cover for heavy load transients and extreme start-up conditions. Another method is to choose the inductor with a saturation current at least as high as the minimum switch current limit of 1.6 A for the TPS65140 and TPS65141 and 0.96 A for the TPS65145. The different switch current limits allow selection of a physically smaller inductor when less output current is required. The second important parameter is the inductor DC resistance. Usually, the lower the DC resistance, the higher the efficiency. However, the inductor DC resistance is not the only parameter determining the efficiency. Especially for a boost converter where the inductor is the

Copyright © 2003–2016, Texas Instruments Incorporated

energy storage element, the type and material of the inductor influences the efficiency as well. Especially at high switching frequencies of 1.6 MHz, inductor core losses, proximity effects, and skin effects become more important. Usually, an inductor with a larger form factor yields higher efficiency. The efficiency difference between different inductors can vary from 2% to 10%. For the TPS6514x, inductor values from 3.3 µH to 6.8 µH are a good choice but other values can be used as well. Possible inductors are shown in Table 2.

Table 2. Inductor Selection

DEVICE	INDUCTOR VALUE	COMPONENT SUPPLIER	DIMENSIONS / mm	ISAT/DCR
TPS65140	4.7 µH	Coilcraft DO1813P-472HC	8.89 × 6.1 × 5	2.6 A, 54 mΩ
	4.2 µH	Sumida CDRH5D28 4R2	5.7 × 5.7 × 3	2.2 A, 23 mΩ
	4.7 µH	Sumida CDC5D23 4R7	6 × 6 × 2.5	1.6 A, 48 mΩ
	3.3 µH	Wuerth Elektronik 744042003	4.8 × 4.8 × 2	1.8 A, 65 mΩ
	4.2 µH	Sumida CDRH6D12 4R2	6.5 × 6.5 × 1.5	1.8 A, 60 mΩ
	3.3 µH	Sumida CDRH6D12 3R3	6.5 × 6.5 × 1.5	1.9 A, 50 mΩ
TPS65145	3.3 µH	Sumida CDPH4D19 3R3	5.1 × 5.1 × 2	1.5 A, 26 mΩ
	3.3 µH	Coilcraft DO1606T-332	6.5 × 5.2 × 2	1.4 A, 120 mΩ
	3.3 µH	Sumida CDRH2D18/HP 3R3	3.2 × 3.2 × 2	1.45 A, 69 mΩ
	4.7 µH	Wuerth Elektronik 744010004	5.5 × 3.5 × 1	1 A, 260 mΩ
	3.3 µH	Coilcraft LPO6610-332M	6.6 × 5.5 × 1	1.3 A, 160 mΩ

8.2.2.1.2 Output Capacitor Selection

For best output voltage filtering, TI recommends a low-ESR output capacitor. Ceramic capacitors have a low ESR value but depending on the application, tantalum capacitors can be used as well. A 22-µF ceramic output capacitor works for most of the applications. Higher capacitor values can be used to improve load transient regulation. See Table 2 for the selection of the output capacitor. The output voltage ripple can be calculated as:

$$\Delta V_{OUT} = \frac{I_{OUT}}{C_{OUT}} \times \left(\frac{1}{f_S} - \frac{I_P \times L}{V_{OUT} + V_D - V_{IN}} \right) + I_P \times ESR \quad (5)$$

where

- I_P = Peak switch current as calculated in the previous section with $I_{SW(peak)}$
- L = Selected inductor value
- I_{OUT} = Normal load current
- f_S = Switching frequency
- V_D = Rectifier diode forward voltage (typical 0.3 V)
- C_{OUT} = Selected output capacitor
- ESR = Output capacitor ESR value

8.2.2.1.3 Input Capacitor Selection

For good input voltage filtering, TI recommends low-ESR ceramic capacitors. A 22-µF ceramic input capacitor is sufficient for most of applications. For better input voltage filtering, this value can be increased. See Table 3 and the typical applications for input capacitor recommendations.

Table 3. Input and Output Capacitors Selection

CAPACITOR	VOLTAGE RATING	COMPONENT SUPPLIER	COMMENTS
22 µF, 1210	16 V	Taiyo Yuden EMK325BY226MM	C_O
22 µF, 1206	6.3 V	Taiyo Yuden JMK316BJ226	C_I

Copyright © 2003–2016, Texas Instruments Incorporated

8.2.2.1.4 Rectifier Diode Selection

To achieve high efficiency, a Schottky diode must be used. The voltage rating must be higher than the maximum output voltage of the converter. The average forward current must be equal to the average inductor current of the converter. The main parameter influencing the efficiency of the converter is the forward voltage and the reverse leakage current of the diode; both must be as low as possible. Possible diodes are: On Semiconductor MBRM120L, Microsemi UPS120E, and Fairchild Semiconductor MBRS130L.

8.2.2.1.5 Converter Loop Design and Stability

The TPS6514x converter loop can be externally compensated and allows access to the internal transconductance error amplifier output at the COMP pin. A small feedforward capacitor across the upper feedback resistor divider speeds up the circuit as well. To test the converter stability and load transient performance of the converter, a load step from 50 mA to 250 mA is applied, and the output voltage of the converter is monitored. Applying load steps to the converter output is a good tool to judge the stability of such a boost converter.

8.2.2.1.6 Design Procedure Quick Steps

1. Select the feedback resistor divider to set the output voltage.
2. Select the feedforward capacitor to place a zero at 50 kHz.
3. Select the compensation capacitor on pin COMP. The smaller the value, the higher the low frequency gain.
4. Use a 50-kΩ potentiometer in series to C_C and monitor V_{OUT} during load transients. Fine tune the load transient by adjusting the potentiometer. Select a resistor value that comes closest to the potentiometer resistor value. This must be done at the highest V_{in} and highest load current because stability is most critical at these conditions.

8.2.2.1.7 Setting the Output Voltage and Selecting the Feedforward Capacitor

The output voltage is set by the external resistor divider and is calculated as:

$$V_{OUT} = 1.146\ V \times \left(1 + \frac{R1}{R2}\right) \quad (6)$$

Across the upper resistor, a bypass capacitor is required to speed up the circuit during load transients as shown in Figure 4.

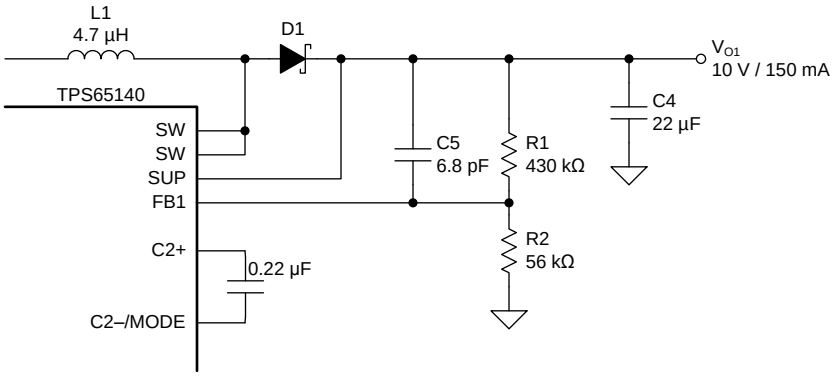

Copyright © 2016, Texas Instruments Incorporated

Figure 4. Feedforward Capacitor

Together with R1 the bypass capacitor C8 sets a zero in the control loop at approximately 50 kHz:

$$C8 = \frac{1}{2 \times \pi \times f_Z \times R1} = \frac{1}{2 \times \pi \times 50\ kHz \times R1} \quad (7)$$

A value closest to the calculated value must be used. Larger feedforward capacitor values reduce the load regulation of the converter and cause load steps as shown in Figure 5.

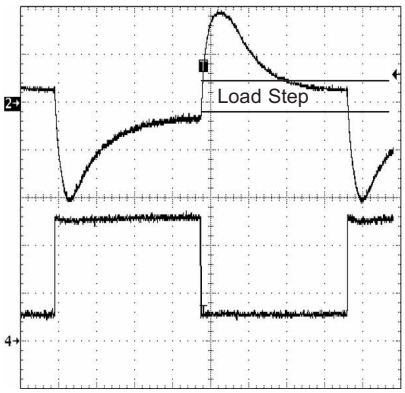

Figure 5. Load Step Caused by a Too Large Feedforward Capacitor Value

8.2.2.1.8 Compensation

The regulator loop can be compensated by adjusting the external components connected to the COMP pin. The COMP pin is connected to the output of the internal transconductance error amplifier. A typical compensation scheme is shown in Figure 6.

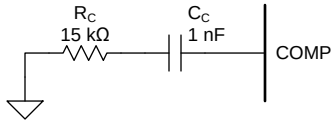

Figure 6. Compensation Network

The compensation capacitor C_C adjusts the low frequency gain, and the resistor value adjusts the high frequency gain. The following formula calculates at what frequency the resistor increases the high frequency gain.

$$f_Z = \frac{1}{2 \times \pi \times C_C \times R_C} \tag{8}$$

Lower input voltages require a higher gain and a lower compensation capacitor value. A good start is C_C = 1 nF for a 3.3-V input and C_C = 2.2 nF for a 5-V input. If the device operates over the entire input voltage range from 2.7 V to 5.8 V, TI recommends a larger compensation capacitor up to 10 nF. Figure 7 shows the load transient with a larger compensation capacitor, and Figure 8 shows a smaller compensation capacitor.

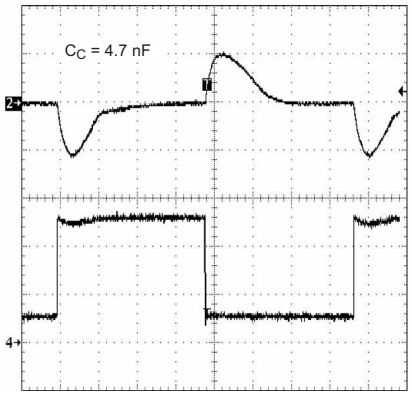

Figure 7. C_C = 4.7 nF

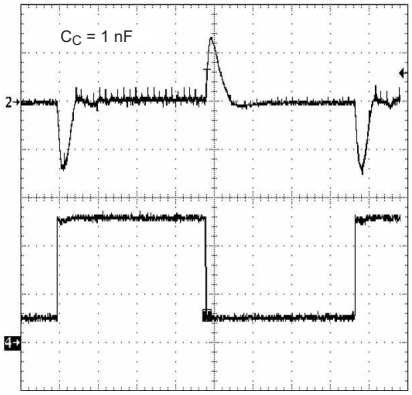

Figure 8. C_C = 1 nF

Copyright © 2003–2016, Texas Instruments Incorporated

Lastly, R_C must be selected. A good practice is to use a 50-kΩ potentiometer and adjust the potentiometer for the best load transient where no oscillations should occur. These tests have to be done at the highest V_{IN} and highest load current because the converter stability is most critical under these conditions. Figure 9, Figure 10, and Figure 11 show the fine tuning of the loop with R_C.

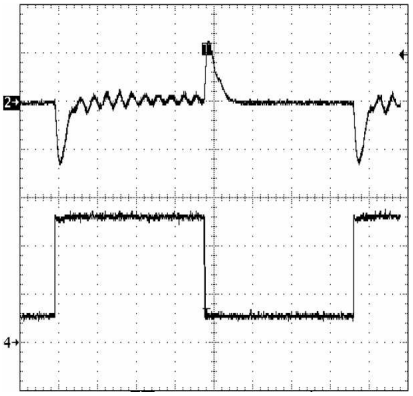

Figure 9. Overcompensated (Damped Oscillation), R_C is Too Large

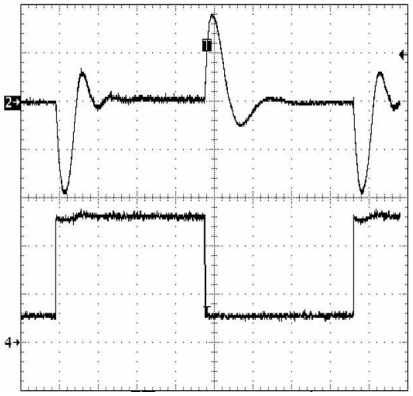

Figure 10. Undercompensated (Loop is Too Slow), R_C is Too Small

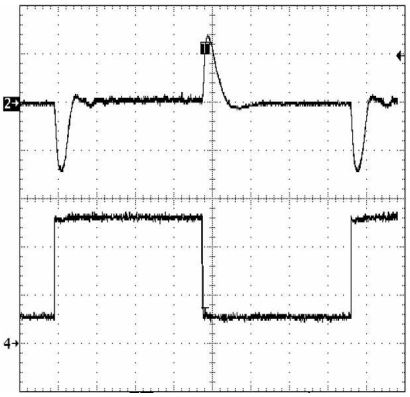

Figure 11. Optimum, R_C is Ideal

8.2.2.1.9 Negative Charge Pump

The negative charge pump provides a regulated output voltage by inverting the main output voltage, V_{O1}. The negative charge pump output voltage is set with external feedback resistors.

The maximum load current of the negative charge pump depends on the voltage drop across the external Schottky diodes, the internal ON-resistance of the charge pump MOSFETS Q8 and Q9, and the impedance of the flying capacitor, C12. When the voltage drop across these components is larger than the voltage difference from V_{O1} to V_{O2}, the charge pump is in drop out, providing the maximum possible output current. Therefore, the higher the voltage difference between V_{O1} and V_{O2}, the higher the possible load current. See Figure 21 for the possible output current versus boost converter voltage V_{O1} and the calculations below.

$$V_{OUTmin} = -(V_{O1} - 2\,V_F - I_O\,(2 \times r_{DS(on)Q8} + 2 \times r_{DS(on)Q9} + X_{cfly})) \quad (9)$$

Setting the output voltage:

$$V_{OUT} = -V_{REF} \times \frac{R3}{R4} = -1.213\ V \times \frac{R3}{R4} \quad (10)$$

$$R3 = R4 \times \frac{|V_{OUT}|}{V_{REF}} = R4 \times \frac{|V_{OUT}|}{1.213} \quad (11)$$

Copyright © 2003–2016, Texas Instruments Incorporated

The lower feedback resistor value, R4, must be in a range from 40 kΩ to 120 kΩ or the overall feedback resistance must be within 500 kΩ to 1 MΩ. Smaller values load the reference too heavy and larger values may cause stability problems. The negative charge pump requires two external Schottky diodes. The peak current rating of the Schottky diode must be twice the load current of the output. For a 20-mA output current, the dual Schottky diode BAT54 or similar is a good choice.

8.2.2.1.10 Positive Charge Pump

The positive charge pump can be operated in a voltage doubler mode or a voltage tripler mode depending on the configuration of the C2+ and C2–/MODE pins. Leaving the C2+ pin open and connecting C2-/MODE to GND forces the positive charge pump to operate in a voltage doubler mode. If higher output voltages are required the positive charge pump can be operated as a voltage tripler. To operate the charge pump in the voltage tripler mode, a flying capacitor must be connected to C2+ and C2–/MODE.

The maximum load current of the positive charge pump depends on the voltage drop across the internal Schottky diodes, the internal ON-resistance of the charge pump MOSFETS, and the impedance of the flying capacitor. When the voltage drop across these components is larger than the voltage difference V_{O1} × 2 to V_{O3} (doubler mode) or V_{O1} × 3 to V_{O3} (tripler mode), then the charge pump is in dropout, providing the maximum possible output current. Therefore, the higher the voltage difference between V_{O1} x 2 (doubler) or V_{O1} × 3 (tripler) to V_{O3}, the higher the possible load current. See Figure 22 and Figure 23 for output current versus boost converter voltage, V_{O1}, and the following calculations.

Voltage doubler:

$$V_{O3max} = 2 \times V_O1 – (2\ V_F + 2 \times I_O \times (2 \times r_{DS(on)Q5} + r_{DS(on)Q3} + r_{DS(on)Q4} + X_{C1})) \quad (12)$$

Voltage tripler:

$$V_{O3max} = 3 \times V_O – (4 \times V_F + 2 \times I_O \times (3 \times r_{DS(on)Q5} + r_{DS(on)Q3} + r_{DS(on)Q4} + X_{C1} + X_{C2})) \quad (13)$$

The output voltage is set by the external resistor divider and is calculated as:

$$V_{OUT} = 1.214 \times \left(1 + \frac{R5}{R6}\right) \quad (14)$$

$$R5 = R6 \times \left(\frac{V_{OUT}}{V_{FB}} - 1\right) = R6 \times \left(\frac{V_{OUT}}{1.214} - 1\right) \quad (15)$$

8.2.2.1.11 Linear Regulator Controller

The TPS6514x includes a linear regulator controller to generate a 3.3-V rail when the system is powered from a 5-V supply. Because an external NPN transistor is required, the input voltage of the TPS6514x applied to VIN must be higher than the output voltage of the regulator. To provide a minimum base drive current of 13.5 mA, a minimum internal voltage drop of 500 mV from V_I to V_{BASE} is required. This can be translated into a minimum input voltage on VIN for a certain output voltage as the following calculation shows:

$$V_{I(min)} = V_{O4} + V_{BE} + 0.5\ V \quad (16)$$

The base drive current together with the h_{FE} of the external transistor determines the possible output current. Using a standard NPN transistor like the BCP68 allows an output current of 1 A and using the BCP54 allows a load current of 337 mA for an input voltage of 5 V. Other transistors can be used as well, depending on the required output current, power dissipation, and PCB space. The device is stable with a 4.7-µF ceramic output capacitor. Larger output capacitor values can be used to improve the load transient response when higher load currents are required.

Copyright © 2003–2016, Texas Instruments Incorporated

8.2.3 Application Curves

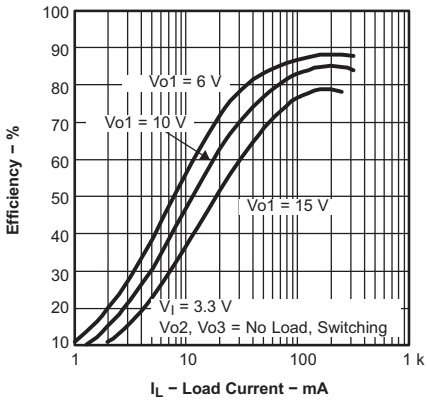

Figure 12. Efficiency vs Load Current

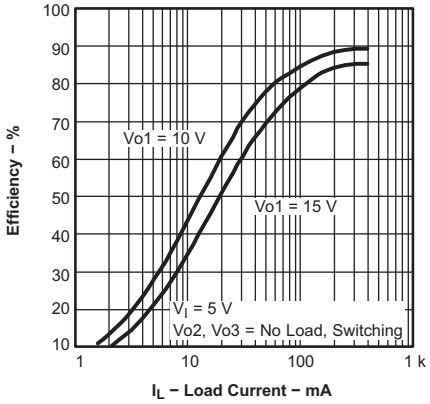

Figure 13. Efficiency vs Load Current

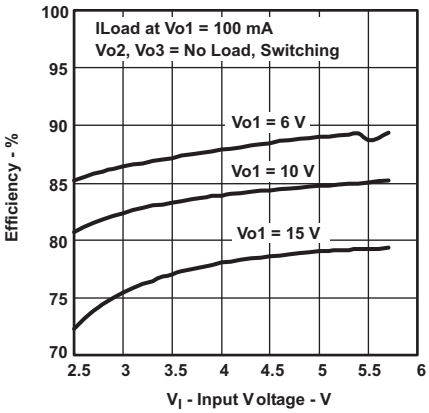

Figure 14. Efficiency vs Input Voltage

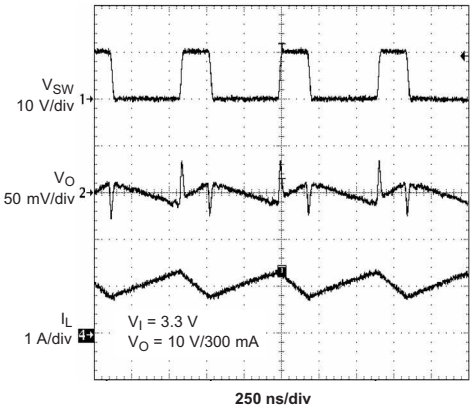

Figure 15. PWM Operation Continuous Mode

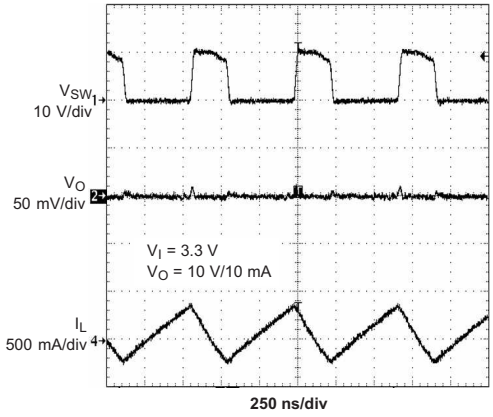

Figure 16. PWM Operation at Light Load

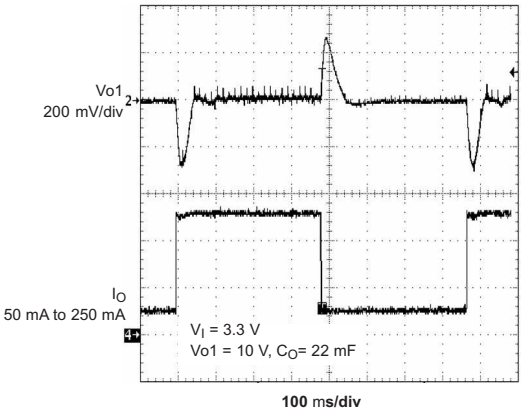

Figure 17. Load Transient Response

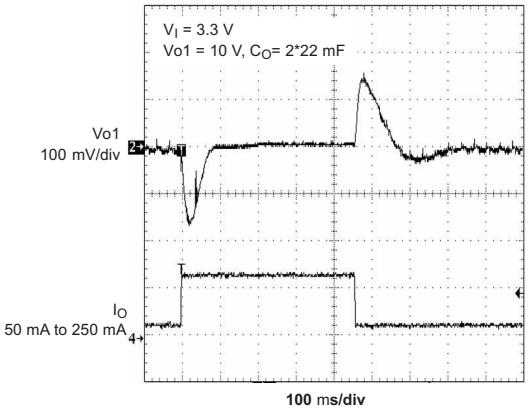

Figure 18. Load Transient Response

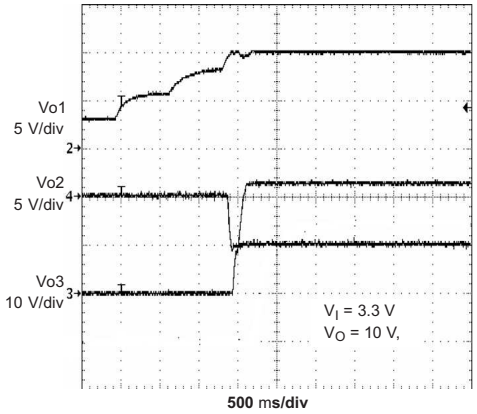

Figure 19. Power-Up Sequencing

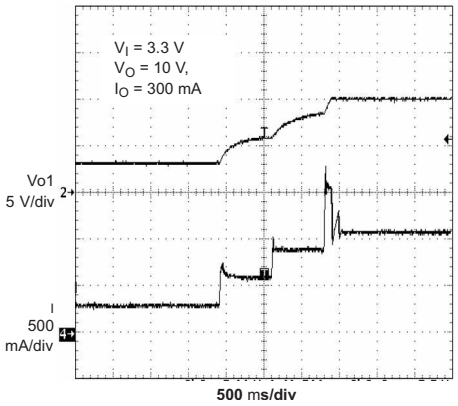

Figure 20. Soft Start V_{O1}

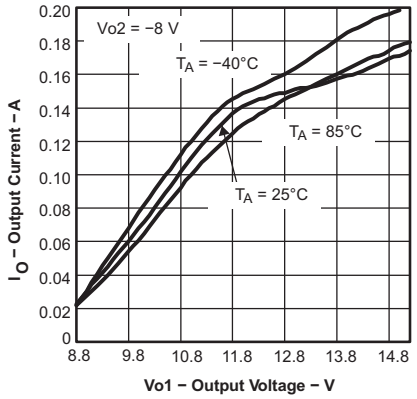

Figure 21. V_{O2} Maximum Load Current

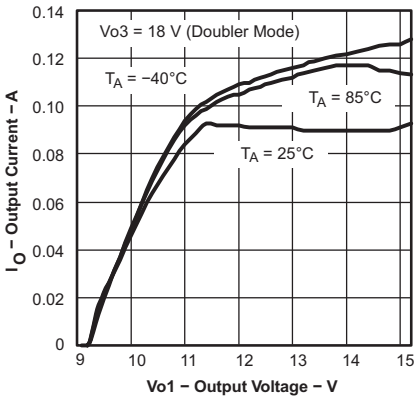

Figure 22. V_{O3} Maximum Load Current

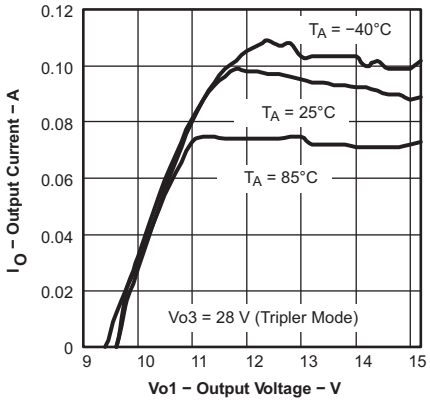

Figure 23. V_{O3} Maximum Load Current

Copyright © 2003–2016, Texas Instruments Incorporated

8.3 System Examples

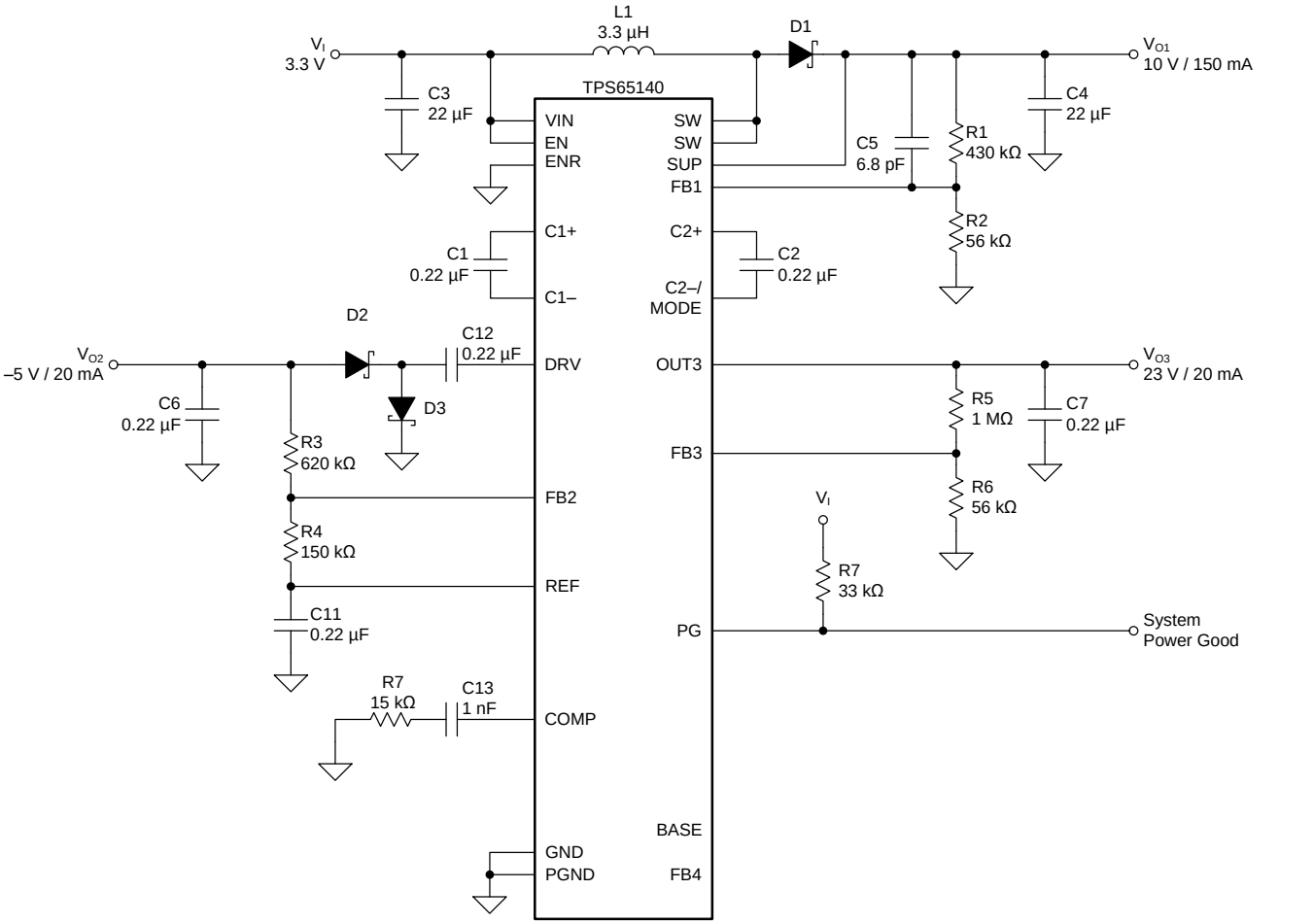

Copyright © 2016, Texas Instruments Incorporated

Figure 24. Typical Application, Notebook Supply

System Examples (continued)

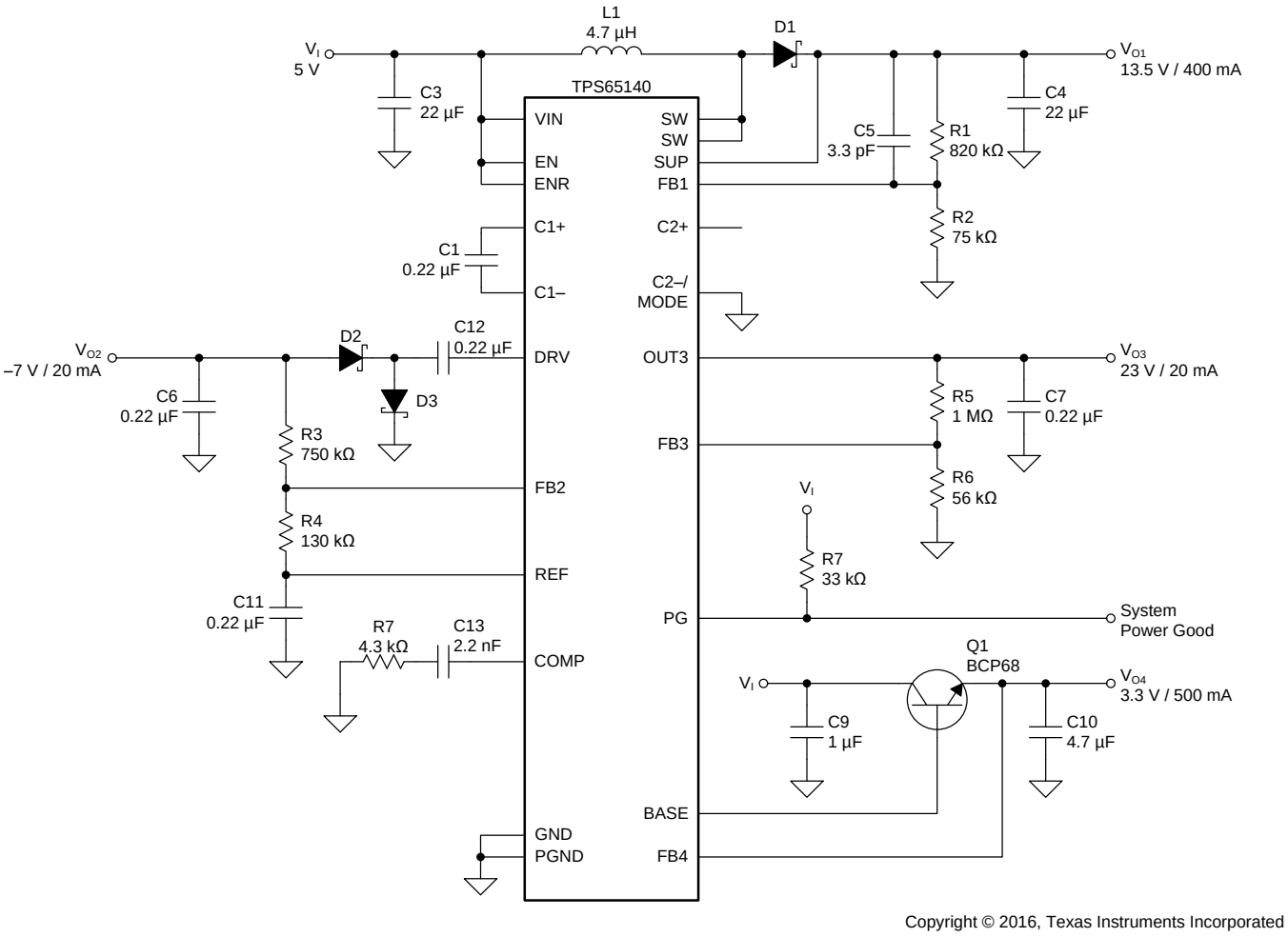

Copyright © 2016, Texas Instruments Incorporated

Figure 25. Typical Application, Monitor Supply

9 Power Supply Recommendations

The TPS6514x devices are designed to operate from an input voltage supply range from 2.7 V to 5.8 V. This input supply must be well regulated. The input capacitance shown in the application schematics in this data sheet is sufficient for typical applications.

Copyright © 2003–2016, Texas Instruments Incorporated

10 Layout

10.1 Layout Guidelines

For all switching power supplies, the layout is an important step in the design, especially at high-peak currents and switching frequencies. If the layout is not carefully designed, the regulator might show stability and EMI problems. TI recommends the following PCB layout guidelines for the TPS6514x devices:

- Connect PGND and AGND together on the same ground plane.
- Connect all capacitor grounds and PGND together on a common ground plane.
- Place the input filter capacitor as close as possible to the input pin of the IC.
- Route first the traces carrying high-switching currents with wide and short traces.
- Isolate analog signal paths from power paths.
- If vias are necessary, try to use more than one in parallel to decrease parasitics, especially for power traces.
- Solder the thermal pad to the PCB for good thermal performance

10.2 Layout Example

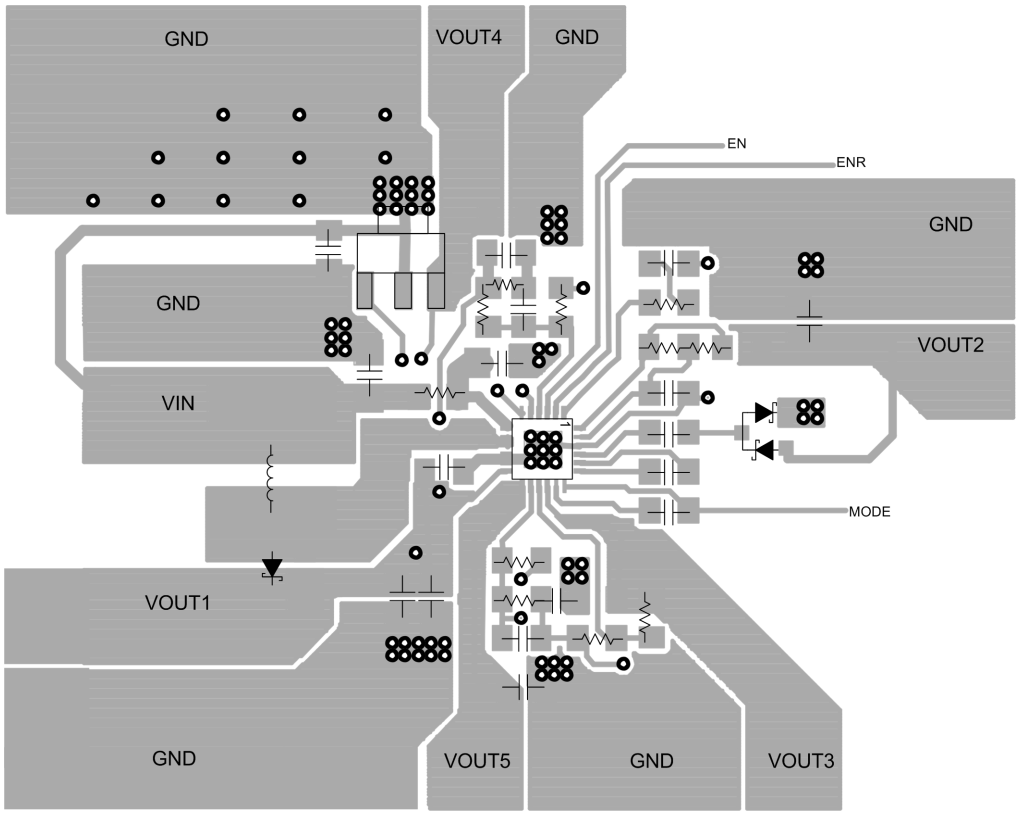

Figure 26. PCB Layout Example

10.3 Thermal Considerations

An influential component of the thermal performance of a package is board design. To take full advantage of the heat dissipation abilities of the PowerPAD or VQFN package with exposed thermal die, a board that acts similar to a heatsink and allows for the use of an exposed (and solderable) deep downset pad must be used. For further information, see Texas Instruments application notes *PowerPAD Thermally Enhanced Package* and *Power Pad Made Easy*. For the VQFN package, see the application report *QFN/SON PCB Attachement*. Especially for the VQFN package, it is required to solder down the thermal pad to achieve the required thermal resistance.

Copyright © 2003–2016, Texas Instruments Incorporated

11 Device and Documentation Support

11.1 Device Support

11.1.1 Third-Party Products Disclaimer

TI'S PUBLICATION OF INFORMATION REGARDING THIRD-PARTY PRODUCTS OR SERVICES DOES NOT CONSTITUTE AN ENDORSEMENT REGARDING THE SUITABILITY OF SUCH PRODUCTS OR SERVICES OR A WARRANTY, REPRESENTATION OR ENDORSEMENT OF SUCH PRODUCTS OR SERVICES, EITHER ALONE OR IN COMBINATION WITH ANY TI PRODUCT OR SERVICE.

11.2 Documentation Support

11.2.1 Related Documentation

For related documentation see the following:

- *PowerPAD Thermally Enhanced Package* (SLMA002)
- *Power Pad Made Easy* (SLMA004)
- *QFN/SON PCB Attachement* (SLUA271)

11.3 Related Links

The table below lists quick access links. Categories include technical documents, support and community resources, tools and software, and quick access to sample or buy.

Table 4. Related Links

PARTS	PRODUCT FOLDER	SAMPLE & BUY	TECHNICAL DOCUMENTS	TOOLS & SOFTWARE	SUPPORT & COMMUNITY
TPS65140	Click here	Click here	Click here	Click here	Click here
TPS65141	Click here	Click here	Click here	Click here	Click here
TPS65145	Click here	Click here	Click here	Click here	Click here

11.4 Receiving Notification of Documentation Updates

To receive notification of documentation updates, navigate to the device product folder on ti.com. In the upper right corner, click on *Alert me* to register and receive a weekly digest of any product information that has changed. For change details, review the revision history included in any revised document.

11.5 Community Resources

The following links connect to TI community resources. Linked contents are provided "AS IS" by the respective contributors. They do not constitute TI specifications and do not necessarily reflect TI's views; see TI's Terms of Use.

TI E2E™ Online Community ***TI's Engineer-to-Engineer (E2E) Community.*** Created to foster collaboration among engineers. At e2e.ti.com, you can ask questions, share knowledge, explore ideas and help solve problems with fellow engineers.

Design Support ***TI's Design Support*** Quickly find helpful E2E forums along with design support tools and contact information for technical support.

11.6 Trademarks

PowerPAD, E2E are trademarks of Texas Instruments.
All other trademarks are the property of their respective owners.

11.7 Electrostatic Discharge Caution



These devices have limited built-in ESD protection. The leads should be shorted together or the device placed in conductive foam during storage or handling to prevent electrostatic damage to the MOS gates.

Copyright © 2003–2016, Texas Instruments Incorporated

11.8 Glossary

SLYZ022 — *TI Glossary*.

This glossary lists and explains terms, acronyms, and definitions.

12 Mechanical, Packaging, and Orderable Information

The following pages include mechanical, packaging, and orderable information. This information is the most current data available for the designated devices. This data is subject to change without notice and revision of this document. For browser-based versions of this data sheet, refer to the left-hand navigation.

Copyright © 2003–2016, Texas Instruments Incorporated

PACKAGING INFORMATION

Orderable Device	Status (1)	Package Type	Package Drawing	Pins	Package Qty	Eco Plan (2)	Lead/Ball Finish (6)	MSL Peak Temp (3)	Op Temp (°C)	Device Marking (4/5)	Samples
TPS65140PWP	ACTIVE	HTSSOP	PWP	24	60	Green (RoHS & no Sb/Br)	CU NIPDAU	Level-2-260C-1 YEAR	-40 to 85	TPS65140	Samples
TPS65140PWPR	ACTIVE	HTSSOP	PWP	24	2000	Green (RoHS & no Sb/Br)	CU NIPDAU	Level-2-260C-1 YEAR	-40 to 85	TPS65140	Samples
TPS65140RGER	ACTIVE	VQFN	RGE	24	3000	Green (RoHS & no Sb/Br)	CU NIPDAU	Level-2-260C-1 YEAR	-40 to 85	TPS 65140	Samples
TPS65141PWP	ACTIVE	HTSSOP	PWP	24	60	Green (RoHS & no Sb/Br)	CU NIPDAU	Level-2-260C-1 YEAR	-40 to 85	TPS65141	Samples
TPS65141PWPR	ACTIVE	HTSSOP	PWP	24	2000	Green (RoHS & no Sb/Br)	CU NIPDAU	Level-2-260C-1 YEAR	-40 to 85	TPS65141	Samples
TPS65141RGER	ACTIVE	VQFN	RGE	24	3000	Green (RoHS & no Sb/Br)	CU NIPDAU	Level-2-260C-1 YEAR	-40 to 85	TPS 65141	Samples
TPS65145PWP	ACTIVE	HTSSOP	PWP	24	60	Green (RoHS & no Sb/Br)	CU NIPDAU	Level-2-260C-1 YEAR	-40 to 85	TPS65145	Samples
TPS65145PWPR	ACTIVE	HTSSOP	PWP	24	2000	Green (RoHS & no Sb/Br)	CU NIPDAU	Level-2-260C-1 YEAR	-40 to 85	TPS65145	Samples
TPS65145RGER	ACTIVE	VQFN	RGE	24	3000	Green (RoHS & no Sb/Br)	CU NIPDAU	Level-2-260C-1 YEAR	-40 to 85	TPS 65145	Samples

(1) The marketing status values are defined as follows:
ACTIVE: Product device recommended for new designs.
LIFEBUY: TI has announced that the device will be discontinued, and a lifetime-buy period is in effect.
NRND: Not recommended for new designs. Device is in production to support existing customers, but TI does not recommend using this part in a new design.
PREVIEW: Device has been announced but is not in production. Samples may or may not be available.
OBSOLETE: TI has discontinued the production of the device.

(2) **RoHS:** TI defines "RoHS" to mean semiconductor products that are compliant with the current EU RoHS requirements for all 10 RoHS substances, including the requirement that RoHS substance do not exceed 0.1% by weight in homogeneous materials. Where designed to be soldered at high temperatures, "RoHS" products are suitable for use in specified lead-free processes. TI may reference these types of products as "Pb-Free".
RoHS Exempt: TI defines "RoHS Exempt" to mean products that contain lead but are compliant with EU RoHS pursuant to a specific EU RoHS exemption.
Green: TI defines "Green" to mean the content of Chlorine (Cl) and Bromine (Br) based flame retardants meet JS709B low halogen requirements of <=1000ppm threshold. Antimony trioxide based flame retardants must also meet the <=1000ppm threshold requirement.

(3) MSL, Peak Temp. - The Moisture Sensitivity Level rating according to the JEDEC industry standard classifications, and peak solder temperature.

(4) There may be additional marking, which relates to the logo, the lot trace code information, or the environmental category on the device.

(5) Multiple Device Markings will be inside parentheses. Only one Device Marking contained in parentheses and separated by a "~" will appear on a device. If a line is indented then it is a continuation of the previous line and the two combined represent the entire Device Marking for that device.

(6) Lead/Ball Finish - Orderable Devices may have multiple material finish options. Finish options are separated by a vertical ruled line. Lead/Ball Finish values may wrap to two lines if the finish value exceeds the maximum column width.

Important Information and Disclaimer: The information provided on this page represents TI's knowledge and belief as of the date that it is provided. TI bases its knowledge and belief on information provided by third parties, and makes no representation or warranty as to the accuracy of such information. Efforts are underway to better integrate information from third parties. TI has taken and continues to take reasonable steps to provide representative and accurate information but may not have conducted destructive testing or chemical analysis on incoming materials and chemicals. TI and TI suppliers consider certain information to be proprietary, and thus CAS numbers and other limited information may not be available for release.

In no event shall TI's liability arising out of such information exceed the total purchase price of the TI part(s) at issue in this document sold by TI to Customer on an annual basis.

OTHER QUALIFIED VERSIONS OF TPS65140, TPS65145 :

- Automotive: TPS65140-Q1, TPS65145-Q1

NOTE: Qualified Version Definitions:

- Automotive - Q100 devices qualified for high-reliability automotive applications targeting zero defects

TAPE AND REEL INFORMATION

REEL DIMENSIONS

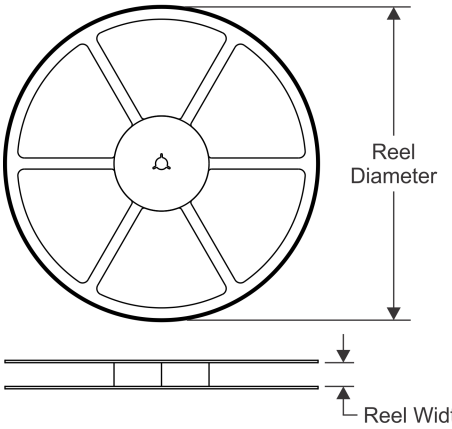

TAPE DIMENSIONS

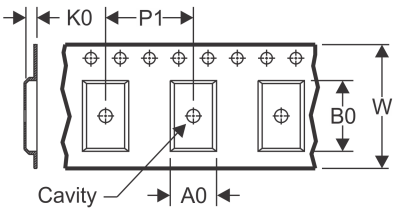

A0	Dimension designed to accommodate the component width
B0	Dimension designed to accommodate the component length
K0	Dimension designed to accommodate the component thickness
W	Overall width of the carrier tape
P1	Pitch between successive cavity centers

QUADRANT ASSIGNMENTS FOR PIN 1 ORIENTATION IN TAPE

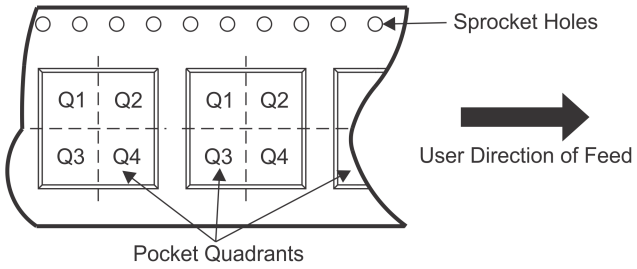

*All dimensions are nominal

Device	Package Type	Package Drawing	Pins	SPQ	Reel Diameter (mm)	Reel Width W1 (mm)	A0 (mm)	B0 (mm)	K0 (mm)	P1 (mm)	W (mm)	Pin1 Quadrant
TPS65140PWPR	HTSSOP	PWP	24	2000	330.0	16.4	6.95	8.3	1.6	8.0	16.0	Q1
TPS65140RGER	VQFN	RGE	24	3000	330.0	12.4	4.25	4.25	1.15	8.0	12.0	Q2
TPS65141PWPR	HTSSOP	PWP	24	2000	330.0	16.4	6.95	8.3	1.6	8.0	16.0	Q1
TPS65141RGER	VQFN	RGE	24	3000	330.0	12.4	4.25	4.25	1.15	8.0	12.0	Q2
TPS65145PWPR	HTSSOP	PWP	24	2000	330.0	16.4	6.95	8.3	1.6	8.0	16.0	Q1
TPS65145RGER	VQFN	RGE	24	3000	330.0	12.4	4.25	4.25	1.15	8.0	12.0	Q2

TAPE AND REEL BOX DIMENSIONS

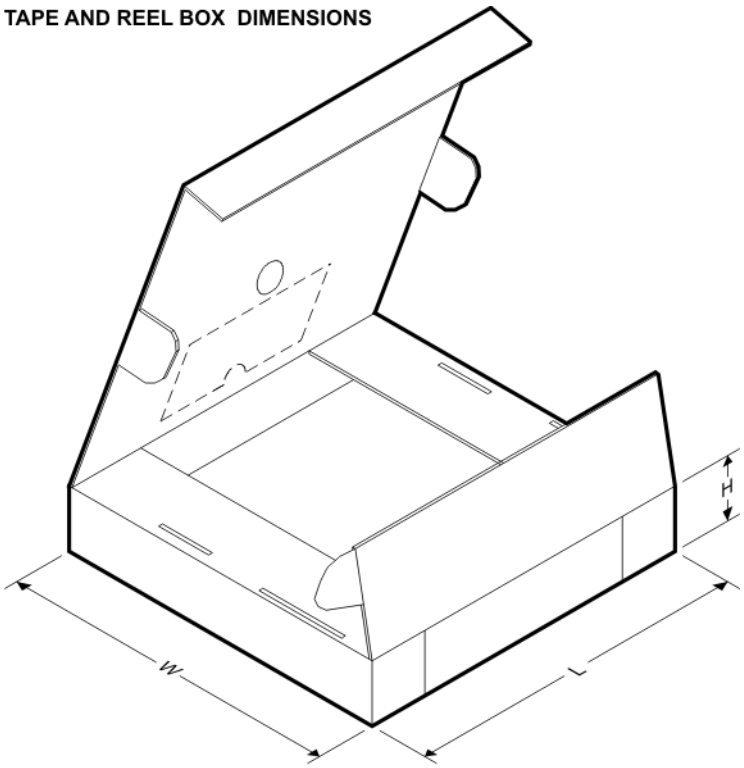

*All dimensions are nominal

Device	Package Type	Package Drawing	Pins	SPQ	Length (mm)	Width (mm)	Height (mm)
TPS65140PWPR	HTSSOP	PWP	24	2000	367.0	367.0	38.0
TPS65140RGER	VQFN	RGE	24	3000	367.0	367.0	35.0
TPS65141PWPR	HTSSOP	PWP	24	2000	367.0	367.0	38.0
TPS65141RGER	VQFN	RGE	24	3000	367.0	367.0	35.0
TPS65145PWPR	HTSSOP	PWP	24	2000	367.0	367.0	38.0
TPS65145RGER	VQFN	RGE	24	3000	367.0	367.0	35.0

GENERIC PACKAGE VIEW

RGE 24 VQFN - 1 mm max height

PLASTIC QUAD FLATPACK - NO LEAD

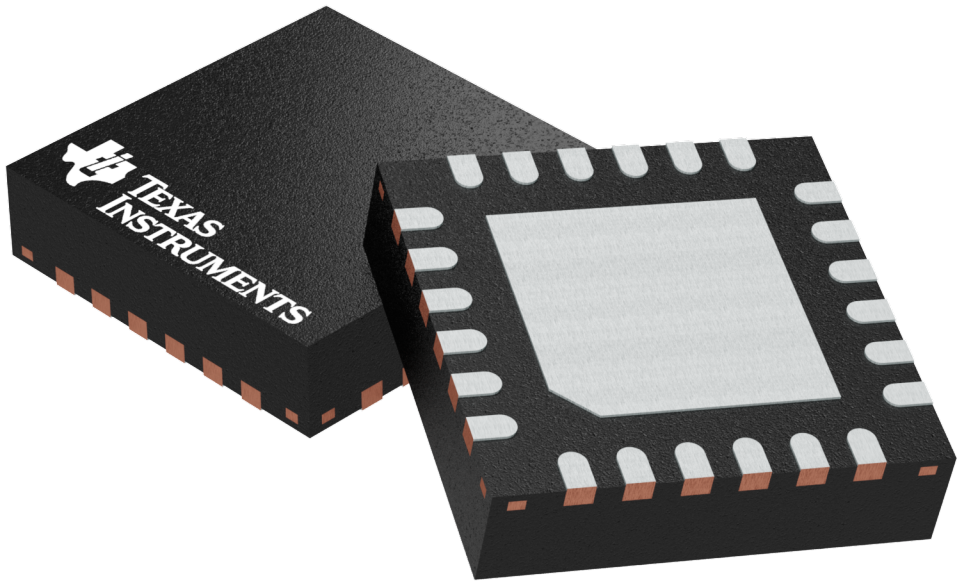

Images above are just a representation of the package family, actual package may vary.
Refer to the product data sheet for package details.

4204104/H

PACKAGE OUTLINE

RGE0024B

VQFN - 1 mm max height

PLASTIC QUAD FLATPACK - NO LEAD

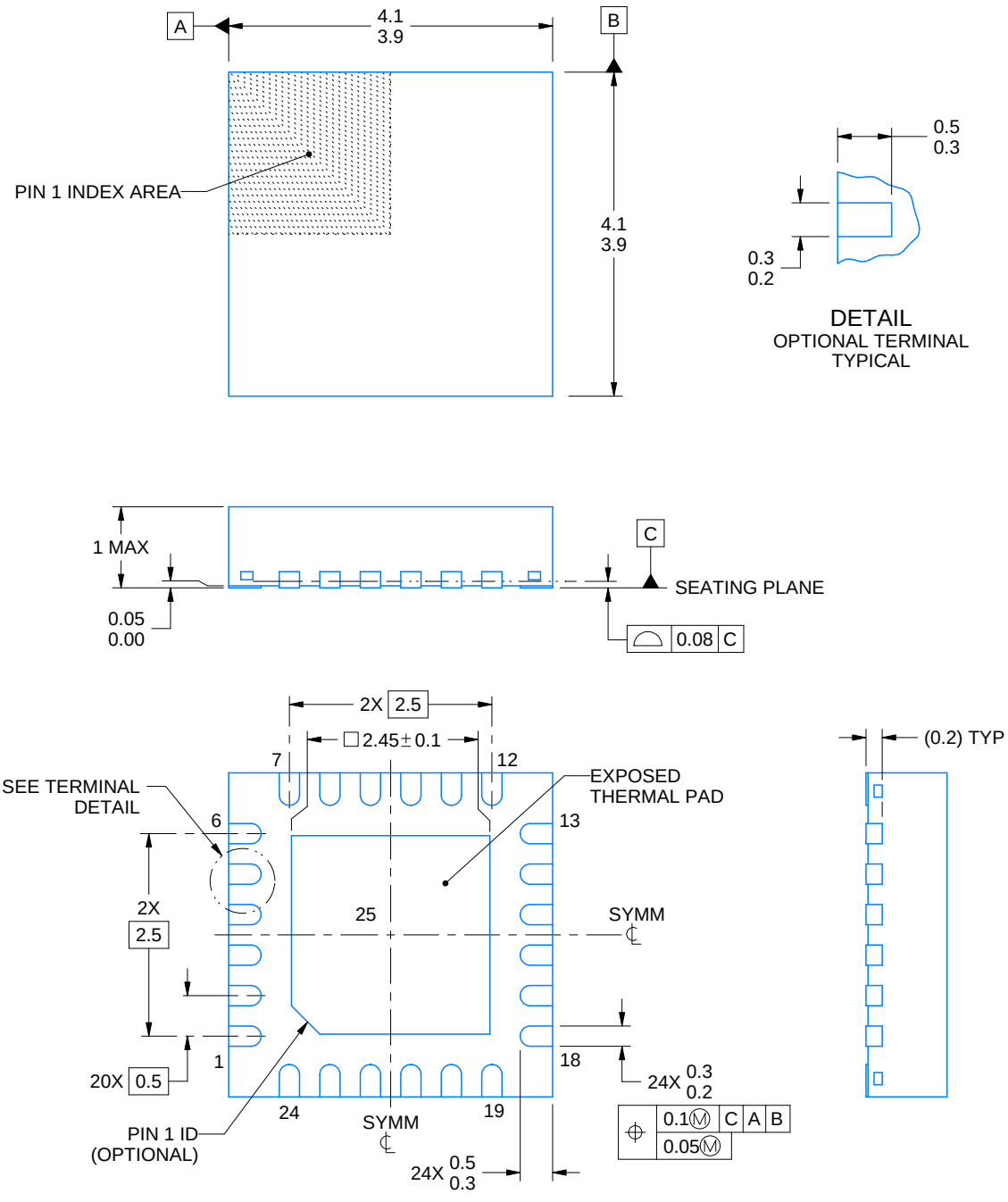

NOTES:

1. All linear dimensions are in millimeters. Any dimensions in parenthesis are for reference only. Dimensioning and tolerancing per ASME Y14.5M.
2. This drawing is subject to change without notice.
3. The package thermal pad must be soldered to the printed circuit board for thermal and mechanical performance.

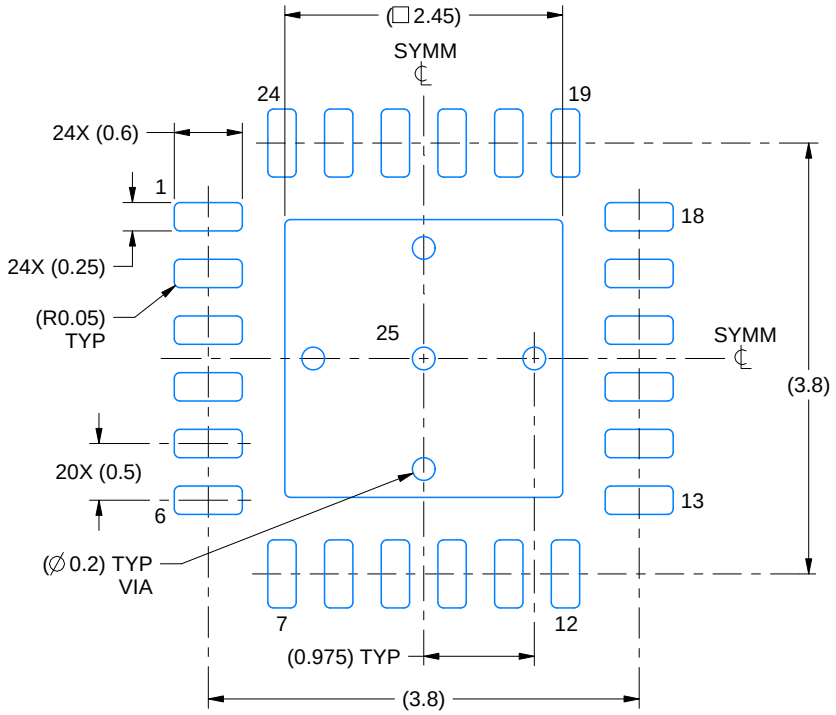

LAND PATTERN EXAMPLE
EXPOSED METAL SHOWN
SCALE:15X

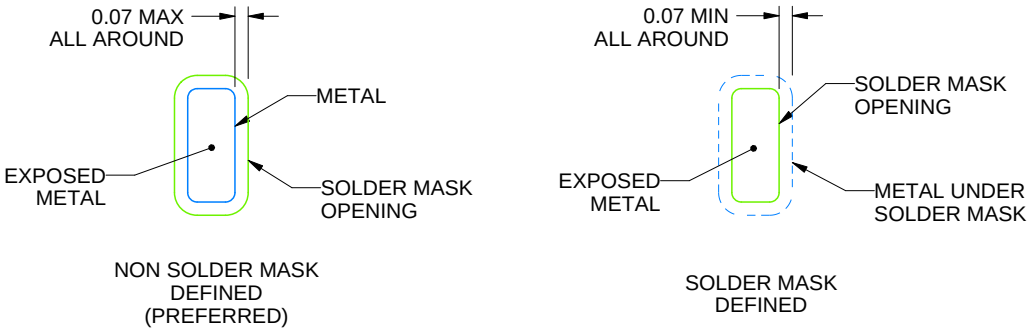

SOLDER MASK DETAILS

4219013/A 05/2017

NOTES: (continued)

4. This package is designed to be soldered to a thermal pad on the board. For more information, see Texas Instruments literature number SLUA271 (www.ti.com/lit/slua271).
5. Vias are optional depending on application, refer to device data sheet. If any vias are implemented, refer to their locations shown on this view. It is recommended that vias under paste be filled, plugged or tented.

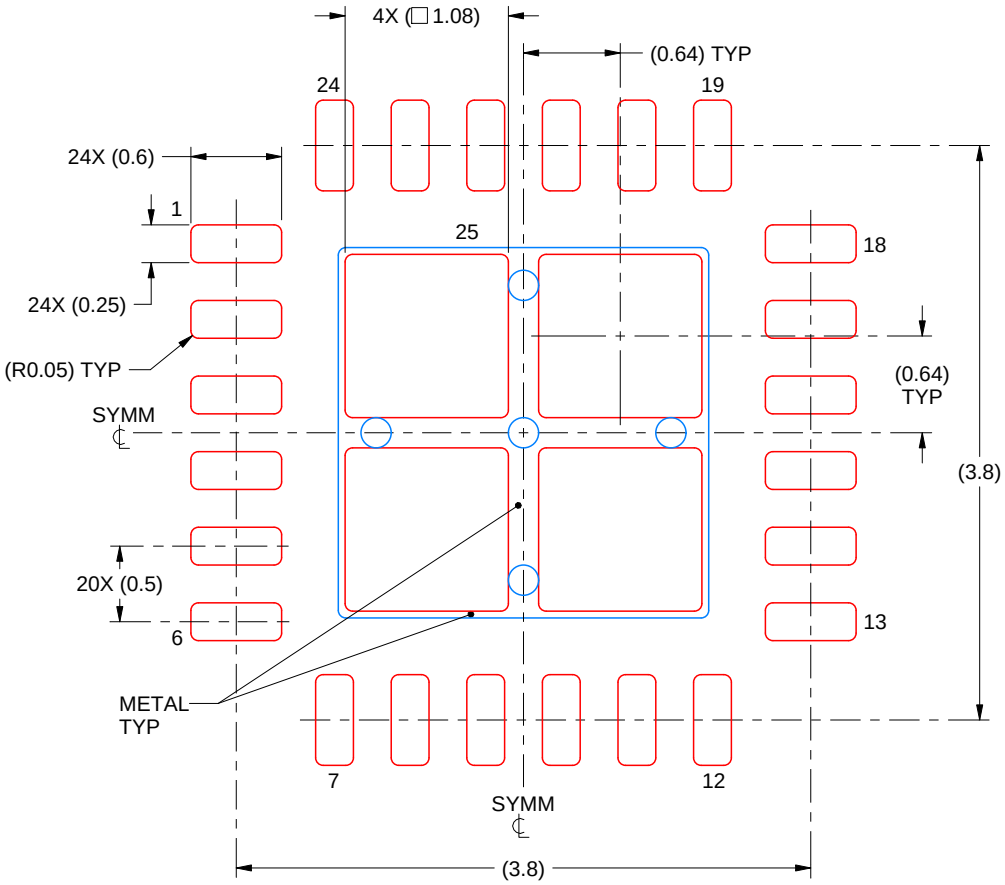

SOLDER PASTE EXAMPLE
BASED ON 0.125 mm THICK STENCIL

EXPOSED PAD 25
78% PRINTED SOLDER COVERAGE BY AREA UNDER PACKAGE
SCALE:20X

4219013/A 05/2017

NOTES: (continued)

6. Laser cutting apertures with trapezoidal walls and rounded corners may offer better paste release. IPC-7525 may have alternate design recommendations.

PWP (R–PDSO–G24) PowerPAD™ PLASTIC SMALL OUTLINE

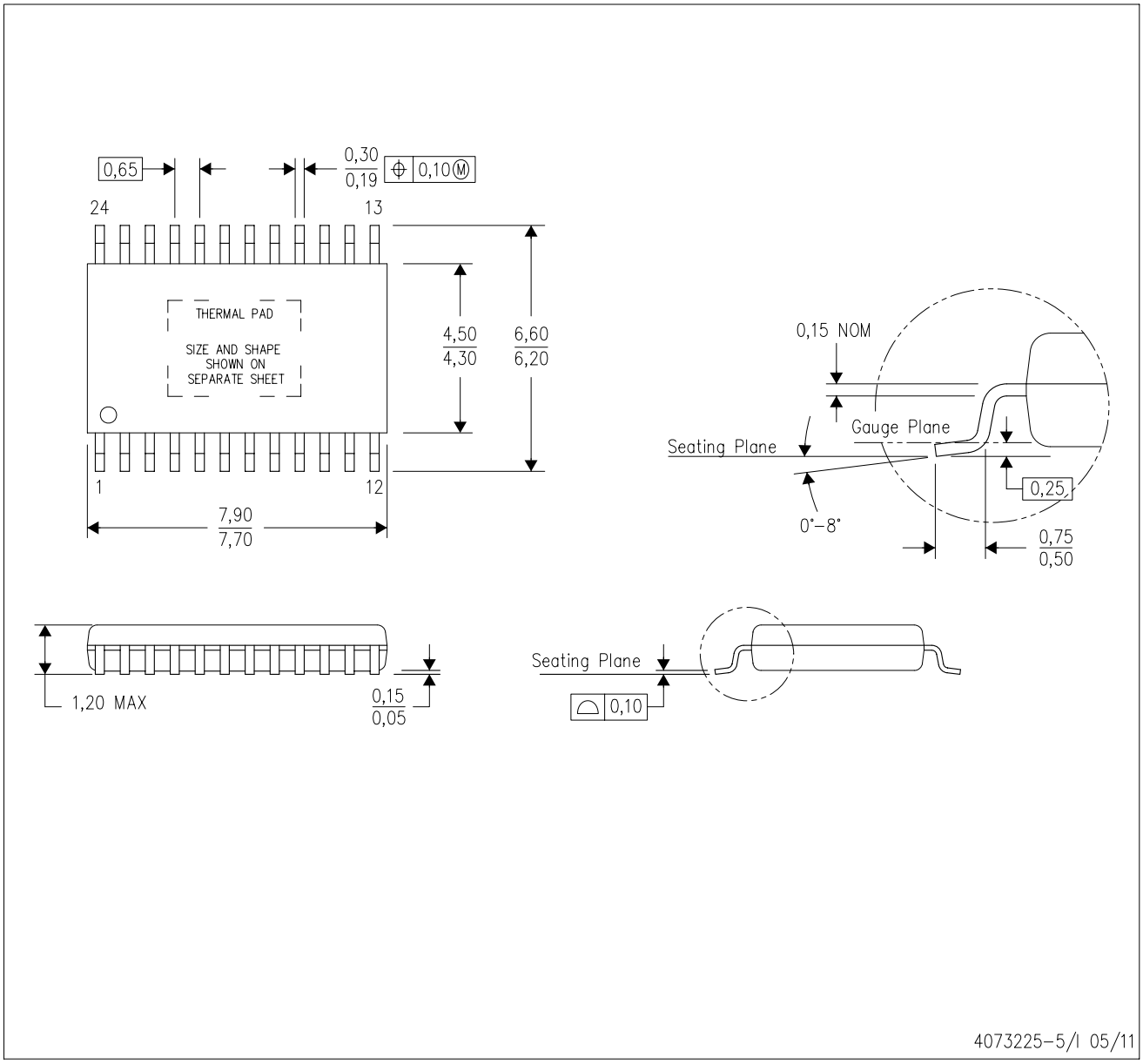

NOTES:
A. All linear dimensions are in millimeters.
B. This drawing is subject to change without notice.
C. Body dimensions do not include mold flash or protrusions. Mold flash and protrusion shall not exceed 0.15 per side.
D. This package is designed to be soldered to a thermal pad on the board. Refer to Technical Brief, PowerPad Thermally Enhanced Package, Texas Instruments Literature No. SLMA002 for information regarding recommended board layout. This document is available at www.ti.com <http://www.ti.com>.
E. See the additional figure in the Product Data Sheet for details regarding the exposed thermal pad features and dimensions.
E. Falls within JEDEC MO–153

PowerPAD is a trademark of Texas Instruments.

PWP (R–PDSO–G24) PowerPAD™ SMALL PLASTIC OUTLINE

THERMAL INFORMATION

This PowerPAD™ package incorporates an exposed thermal pad that is designed to be attached to a printed circuit board (PCB). The thermal pad must be soldered directly to the PCB. After soldering, the PCB can be used as a heatsink. In addition, through the use of thermal vias, the thermal pad can be attached directly to the appropriate copper plane shown in the electrical schematic for the device, or alternatively, can be attached to a special heatsink structure designed into the PCB. This design optimizes the heat transfer from the integrated circuit (IC).

For additional information on the PowerPAD package and how to take advantage of its heat dissipating abilities, refer to Technical Brief, PowerPAD Thermally Enhanced Package, Texas Instruments Literature No. SLMA002 and Application Brief, PowerPAD Made Easy, Texas Instruments Literature No. SLMA004. Both documents are available at www.ti.com.

The exposed thermal pad dimensions for this package are shown in the following illustration.

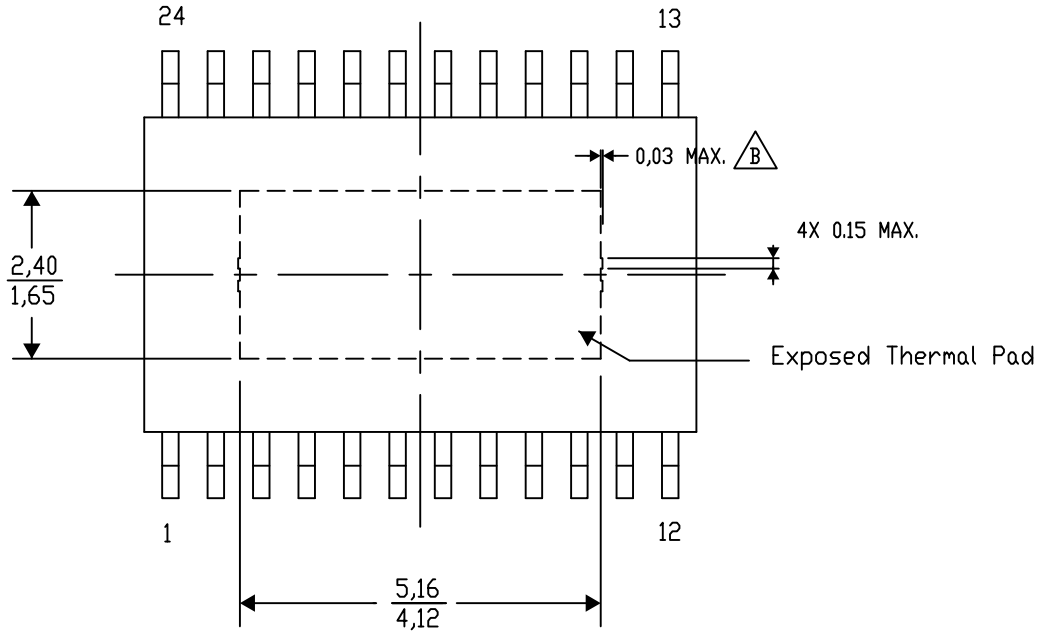

Top View

Exposed Thermal Pad Dimensions

4206332–29/AO 01/16

NOTE: A. All linear dimensions are in millimeters

B. Exposed tie strap features may not be present.

PowerPAD is a trademark of Texas Instruments

PWP (R–PDSO–G24) PowerPAD™ PLASTIC SMALL OUTLINE

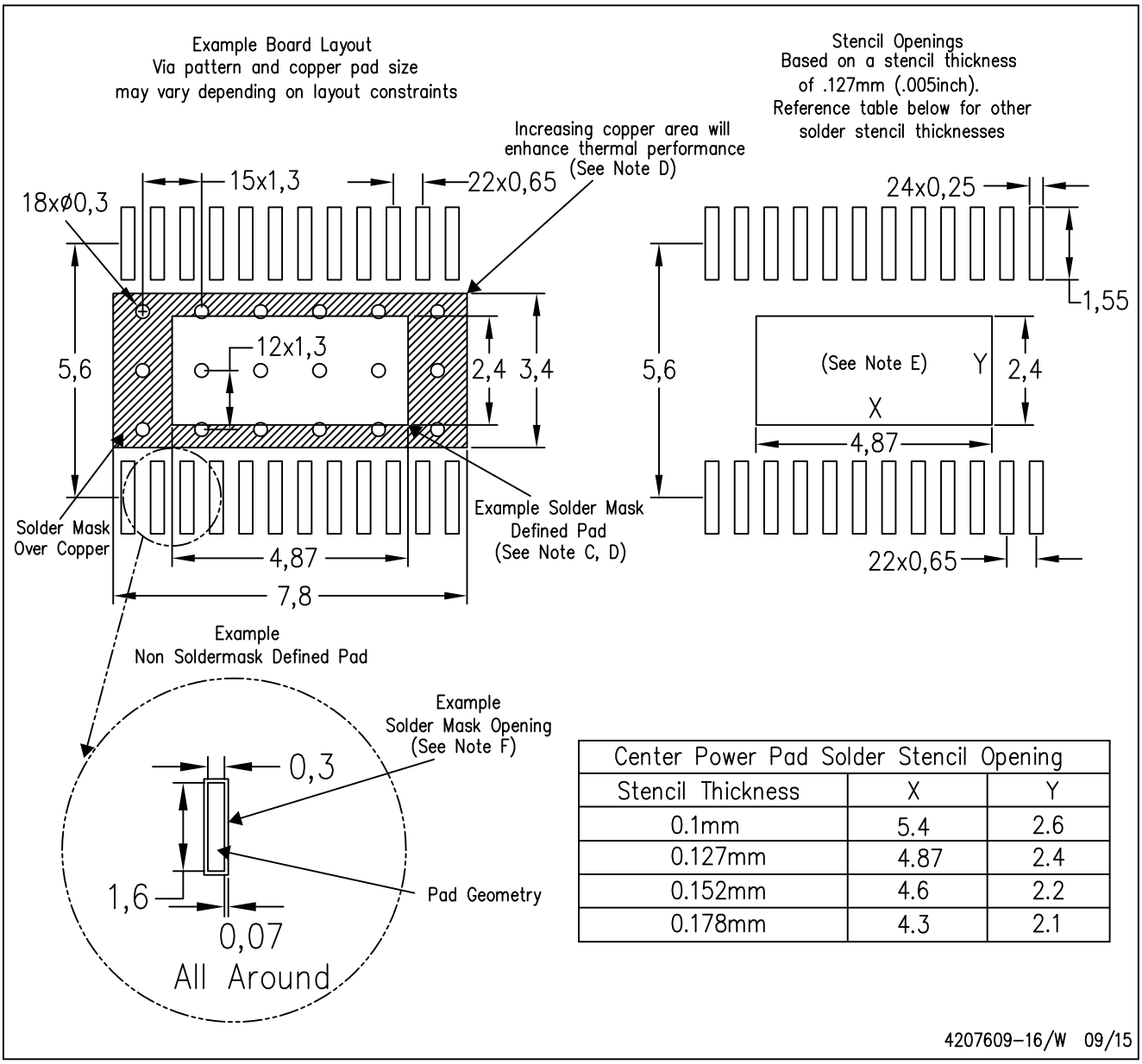

Center Power Pad Solder Stencil Opening		
Stencil Thickness	X	Y
0.1mm	5.4	2.6
0.127mm	4.87	2.4
0.152mm	4.6	2.2
0.178mm	4.3	2.1

NOTES:
A. All linear dimensions are in millimeters.
B. This drawing is subject to change without notice.
C. Customers should place a note on the circuit board fabrication drawing not to alter the center solder mask defined pad.
D. This package is designed to be soldered to a thermal pad on the board. Refer to Technical Brief, PowerPad Thermally Enhanced Package, Texas Instruments Literature No. SLMA002, SLMA004, and also the Product Data Sheets for specific thermal information, via requirements, and recommended board layout. These documents are available at www.ti.com <http://www.ti.com>. Publication IPC–7351 is recommended for alternate designs.
E. Laser cutting apertures with trapezoidal walls and also rounding corners will offer better paste release. Customers should contact their board assembly site for stencil design recommendations. Example stencil design based on a 50% volumetric metal load solder paste. Refer to IPC–7525 for other stencil recommendations.
F. Customers should contact their board fabrication site for solder mask tolerances between and around signal pads.

IMPORTANT NOTICE

Texas Instruments Incorporated (TI) reserves the right to make corrections, enhancements, improvements and other changes to its semiconductor products and services per JESD46, latest issue, and to discontinue any product or service per JESD48, latest issue. Buyers should obtain the latest relevant information before placing orders and should verify that such information is current and complete.

TI's published terms of sale for semiconductor products (http://www.ti.com/sc/docs/stdterms.htm) apply to the sale of packaged integrated circuit products that TI has qualified and released to market. Additional terms may apply to the use or sale of other types of TI products and services.

Reproduction of significant portions of TI information in TI data sheets is permissible only if reproduction is without alteration and is accompanied by all associated warranties, conditions, limitations, and notices. TI is not responsible or liable for such reproduced documentation. Information of third parties may be subject to additional restrictions. Resale of TI products or services with statements different from or beyond the parameters stated by TI for that product or service voids all express and any implied warranties for the associated TI product or service and is an unfair and deceptive business practice. TI is not responsible or liable for any such statements.

Buyers and others who are developing systems that incorporate TI products (collectively, "Designers") understand and agree that Designers remain responsible for using their independent analysis, evaluation and judgment in designing their applications and that Designers have full and exclusive responsibility to assure the safety of Designers' applications and compliance of their applications (and of all TI products used in or for Designers' applications) with all applicable regulations, laws and other applicable requirements. Designer represents that, with respect to their applications, Designer has all the necessary expertise to create and implement safeguards that (1) anticipate dangerous consequences of failures, (2) monitor failures and their consequences, and (3) lessen the likelihood of failures that might cause harm and take appropriate actions. Designer agrees that prior to using or distributing any applications that include TI products, Designer will thoroughly test such applications and the functionality of such TI products as used in such applications.

TI's provision of technical, application or other design advice, quality characterization, reliability data or other services or information, including, but not limited to, reference designs and materials relating to evaluation modules, (collectively, "TI Resources") are intended to assist designers who are developing applications that incorporate TI products; by downloading, accessing or using TI Resources in any way, Designer (individually or, if Designer is acting on behalf of a company, Designer's company) agrees to use any particular TI Resource solely for this purpose and subject to the terms of this Notice.

TI's provision of TI Resources does not expand or otherwise alter TI's applicable published warranties or warranty disclaimers for TI products, and no additional obligations or liabilities arise from TI providing such TI Resources. TI reserves the right to make corrections, enhancements, improvements and other changes to its TI Resources. TI has not conducted any testing other than that specifically described in the published documentation for a particular TI Resource.

Designer is authorized to use, copy and modify any individual TI Resource only in connection with the development of applications that include the TI product(s) identified in such TI Resource. NO OTHER LICENSE, EXPRESS OR IMPLIED, BY ESTOPPEL OR OTHERWISE TO ANY OTHER TI INTELLECTUAL PROPERTY RIGHT, AND NO LICENSE TO ANY TECHNOLOGY OR INTELLECTUAL PROPERTY RIGHT OF TI OR ANY THIRD PARTY IS GRANTED HEREIN, including but not limited to any patent right, copyright, mask work right, or other intellectual property right relating to any combination, machine, or process in which TI products or services are used. Information regarding or referencing third-party products or services does not constitute a license to use such products or services, or a warranty or endorsement thereof. Use of TI Resources may require a license from a third party under the patents or other intellectual property of the third party, or a license from TI under the patents or other intellectual property of TI.

TI RESOURCES ARE PROVIDED "AS IS" AND WITH ALL FAULTS. TI DISCLAIMS ALL OTHER WARRANTIES OR REPRESENTATIONS, EXPRESS OR IMPLIED, REGARDING RESOURCES OR USE THEREOF, INCLUDING BUT NOT LIMITED TO ACCURACY OR COMPLETENESS, TITLE, ANY EPIDEMIC FAILURE WARRANTY AND ANY IMPLIED WARRANTIES OF MERCHANTABILITY, FITNESS FOR A PARTICULAR PURPOSE, AND NON-INFRINGEMENT OF ANY THIRD PARTY INTELLECTUAL PROPERTY RIGHTS. TI SHALL NOT BE LIABLE FOR AND SHALL NOT DEFEND OR INDEMNIFY DESIGNER AGAINST ANY CLAIM, INCLUDING BUT NOT LIMITED TO ANY INFRINGEMENT CLAIM THAT RELATES TO OR IS BASED ON ANY COMBINATION OF PRODUCTS EVEN IF DESCRIBED IN TI RESOURCES OR OTHERWISE. IN NO EVENT SHALL TI BE LIABLE FOR ANY ACTUAL, DIRECT, SPECIAL, COLLATERAL, INDIRECT, PUNITIVE, INCIDENTAL, CONSEQUENTIAL OR EXEMPLARY DAMAGES IN CONNECTION WITH OR ARISING OUT OF TI RESOURCES OR USE THEREOF, AND REGARDLESS OF WHETHER TI HAS BEEN ADVISED OF THE POSSIBILITY OF SUCH DAMAGES.

Unless TI has explicitly designated an individual product as meeting the requirements of a particular industry standard (e.g., ISO/TS 16949 and ISO 26262), TI is not responsible for any failure to meet such industry standard requirements.

Where TI specifically promotes products as facilitating functional safety or as compliant with industry functional safety standards, such products are intended to help enable customers to design and create their own applications that meet applicable functional safety standards and requirements. Using products in an application does not by itself establish any safety features in the application. Designers must ensure compliance with safety-related requirements and standards applicable to their applications. Designer may not use any TI products in life-critical medical equipment unless authorized officers of the parties have executed a special contract specifically governing such use. Life-critical medical equipment is medical equipment where failure of such equipment would cause serious bodily injury or death (e.g., life support, pacemakers, defibrillators, heart pumps, neurostimulators, and implantables). Such equipment includes, without limitation, all medical devices identified by the U.S. Food and Drug Administration as Class III devices and equivalent classifications outside the U.S.

TI may expressly designate certain products as completing a particular qualification (e.g., Q100, Military Grade, or Enhanced Product). Designers agree that it has the necessary expertise to select the product with the appropriate qualification designation for their applications and that proper product selection is at Designers' own risk. Designers are solely responsible for compliance with all legal and regulatory requirements in connection with such selection.

Designer will fully indemnify TI and its representatives against any damages, costs, losses, and/or liabilities arising out of Designer's non-compliance with the terms and provisions of this Notice.

Mailing Address: Texas Instruments, Post Office Box 655303, Dallas, Texas 75265
Copyright © 2018, Texas Instruments Incorporated