DLP470NE 0.47 1080P DMD

1 Features

- 0.47-Inch Diagonal Micromirror Array
  - Full HD/1080P (1920 x 1080)
  - 5.4 Micron Micromirror Pitch
  - ±17° Micromirror Tilt (Relative to Flat Surface)
  - Bottom Illumination
- 2 × LVDS Input Data Bus
- Dedicated DLPC4422 Display Controller, DLPA100 Power Management IC and Motor Driver for reliable operation

2 Applications

- Full HD (1080P) Display
- Laser TV
- Mobile Smart TV
- Digital Signage
- Gaming
- Home Cinema

3 Description

The TI DLP470NE digital micromirror device (DMD) is a digitally controlled micro-electromechanical system (MEMS) spatial light modulator (SLM) that enables bright full HD display systems. DLP470NE DMD is only 0.47-inches in size, yet delivers bright images and video up to 4000 lumens. The DLP470NE DMD, together with the DLPC4422 display controller and DLPA100 power and motor driver, comprise the DLP® 0.47" 1080P chipset. This solution is great fit for many high brightness 1080P/HD display systems.

Device Information(1)

PART NUMBER	PACKAGE	BODY SIZE (NOM)
DLP470NE	FXH (257)	32 mm × 22 mm

(1) For all available packages, see the orderable addendum at the end of the data sheet.

DLP470NE 0.47 1080P DMD

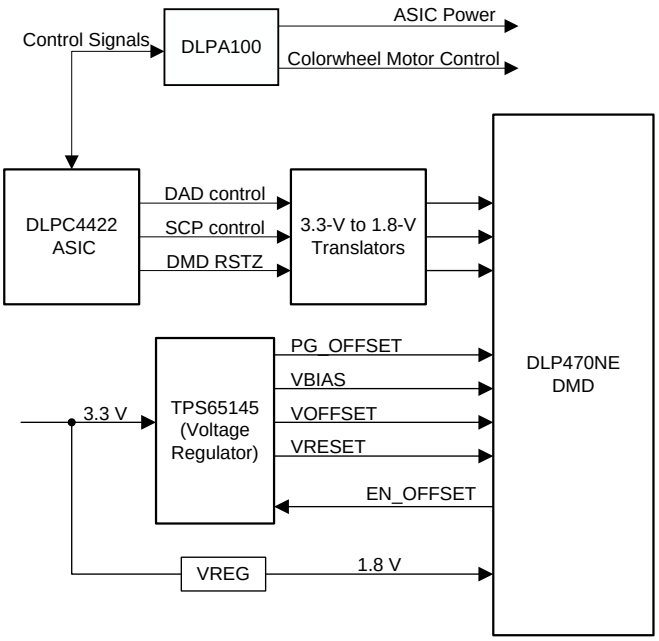

Copyright © 2017, Texas Instruments Incorporated

An IMPORTANT NOTICE at the end of this data sheet addresses availability, warranty, changes, use in safety-critical applications, intellectual property matters and other important disclaimers. PRODUCTION DATA.

Table of Contents

1 Features ... 1
2 Applications ... 1
3 Description ... 1
4 Revision History ... 2
5 Pin Configuration and Functions ... 3
6 Specifications ... 10
6.1 Absolute Maximum Ratings ... 10
6.2 Storage Conditions ... 10
6.3 ESD Ratings ... 11
6.4 Recommended Operating Conditions ... 11
6.5 Thermal Information ... 13
6.6 Electrical Characteristics ... 14
6.7 Capacitance at Recommended Operating Conditions ... 14
6.8 Timing Requirements ... 15
6.9 System Mounting Interface Loads ... 17
6.10 Micromirror Array Physical Characteristics ... 18
6.11 Micromirror Array Optical Characteristics ... 20
6.12 Window Characteristics ... 21
6.13 Chipset Component Usage Specification ... 21
7 Detailed Description ... 22
7.1 Overview ... 22
7.2 Functional Block Diagram ... 23
7.3 Feature Description ... 24
7.4 Device Functional Modes ... 24
7.5 Window Characteristics and Optics ... 24
7.6 Micromirror Array Temperature Calculation ... 26
7.7 Micromirror Landed-On/Landed-Off Duty Cycle ... 27
8 Application and Implementation ... 30
8.1 Application Information ... 30
8.2 Typical Application ... 30
9 Power Supply Recommendations ... 33
9.1 DMD Power Supply Power-Up Procedure ... 33
9.2 DMD Power Supply Power-Down Procedure ... 33
10 Layout ... 36
10.1 Layout Guidelines ... 36
10.2 Layout Example ... 36
11 Device and Documentation Support ... 38
11.1 Device Support ... 38
11.2 Documentation Support ... 38
11.3 Receiving Notification of Documentation Updates ... 39
11.4 Community Resources ... 39
11.5 Trademarks ... 39
11.6 Electrostatic Discharge Caution ... 39
11.7 Glossary ... 39
12 Mechanical, Packaging, and Orderable Information ... 40

4 Revision History

NOTE: Page numbers for previous revisions may differ from page numbers in the current version.

DATE	REVISION	NOTES
August 2017	*	Initial release.

Copyright © 2017, Texas Instruments Incorporated

5 Pin Configuration and Functions

Series 410
257-pin FXH
Bottom View

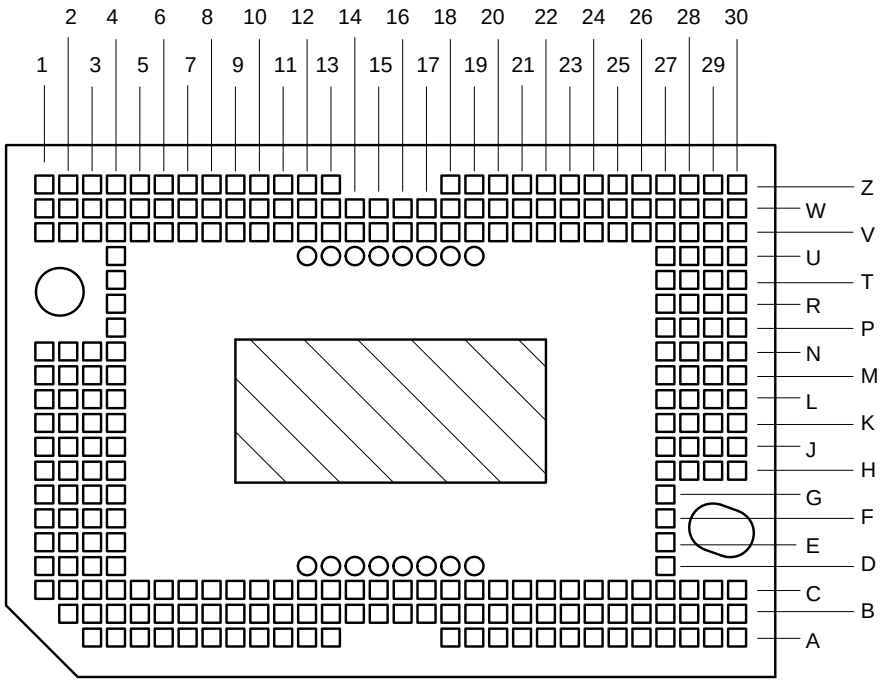

CAUTION

To ensure reliable, long-term operation of the .47" 1080P s410 DMD, it is critical to properly manage the layout and operation of the signals identified in the table below. For specific details and guidelines, refer to the *PCB Design Requirements for TI DLP Standard TRP Digital Micromirror Devices* application report before designing the board.

Pin Functions[1]

PIN		I/O[2]	SIGNAL	DATA RATE	INTERNAL TERMINATION	DESCRIPTION	TRACE LENGTH (mil)
NAME	NO.						
D_AN(0)	C6	NC	LVDS	DDR	Differential	No connect	805.0
D_AN(1)	C3						
D_AN(2)	E1						
D_AN(3)	C4						
D_AN(4)	D1						
D_AN(5)	B8						
D_AN(6)	F4						
D_AN(7)	E3						
D_AN(8)	C11						
D_AN(9)	F3						
D_AN(10)	K4						
D_AN(11)	H3						
D_AN(12)	J3						
D_AN(13)	C13						
D_AN(14)	A5						
D_AN(15)	A3						
D_AP(0)	C7	NC	LVDS	DDR	Differential	No connect	805.0
D_AP(1)	C2						
D_AP(2)	E2						
D_AP(3)	B4						
D_AP(4)	C1						
D_AP(5)	B7						
D_AP(6)	E4						
D_AP(7)	D3						
D_AP(8)	C12						
D_AP(9)	F2						
D_AP(10)	J4						
D_AP(11)	G3						
D_AP(12)	J2						
D_AP(13)	C14						
D_AP(14)	A6						
D_AP(15)	A4						

(1) The .47” 1080P TRP 2xLVDS Series 410 DMD is a component of one or more DLP chipsets. Reliable function and operation of the .47” 1080P TRP 2xLVDS Series 410 DMD requires that it be used in conjunction with the other components of the applicable DLP chipset, including those components that contain or implement TI DMD control technology. TI DMD control technology is the TI technology and devices for operating or controlling a DLP DMD.
(2) I = Input, O = Output, P = Power, G = Ground, NC = No connect

Copyright © 2017, Texas Instruments Incorporated

Pin Functions[1] (continued)

PIN		I/O[2]	SIGNAL	DATA RATE	INTERNAL TERMINATION	DESCRIPTION	TRACE LENGTH (mil)
NAME	NO.						
D_BN(0)	N4	NC	LVDS	DDR	Differential	No connect	805.0
D_BN(1)	Z11						
D_BN(2)	W4						
D_BN(3)	W10						
D_BN(4)	L1						
D_BN(5)	V8						
D_BN(6)	W6						
D_BN(7)	M1						
D_BN(8)	R4						
D_BN(9)	W1						
D_BN(10)	U4						
D_BN(11)	V2						
D_BN(12)	Z5						
D_BN(13)	N3						
D_BN(14)	Z2						
D_BN(15)	L4						
D_BP(0)	M4	NC	LVDS	DDR	Differential	No connect	805.0
D_BP(1)	Z12						
D_BP(2)	Z4						
D_BP(3)	Z10						
D_BP(4)	L2						
D_BP(5)	V9						
D_BP(6)	W7						
D_BP(7)	N1						
D_BP(8)	P4						
D_BP(9)	V1						
D_BP(10)	T4						
D_BP(11)	V3						
D_BP(12)	Z6						
D_BP(13)	N2						
D_BP(14)	Z3						
D_BP(15)	L3						

Copyright © 2017, Texas Instruments Incorporated

Pin Functions[1] (continued)

PIN		I/O[2]	SIGNAL	DATA RATE	INTERNAL TERMINATION	DESCRIPTION	TRACE LENGTH (mil)
NAME	NO.						
D_CN(0)	H27	I	LVDS	DDR	Differential	Data negative	805.0
D_CN(1)	A20						
D_CN(2)	H28						
D_CN(3)	K28						
D_CN(4)	K30						
D_CN(5)	C23						
D_CN(6)	G27						
D_CN(7)	J30						
D_CN(8)	B24						
D_CN(9)	A21						
D_CN(10)	A27						
D_CN(11)	C29						
D_CN(12)	A26						
D_CN(13)	C25						
D_CN(14)	A29						
D_CN(15)	C30						
D_CP(0)	J27	I	LVDS	DDR	Differential	Data positive	805.0
D_CP(1)	A19						
D_CP(2)	H29						
D_CP(3)	K27						
D_CP(4)	K29						
D_CP(5)	C22						
D_CP(6)	F27						
D_CP(7)	H30						
D_CP(8)	B25						
D_CP(9)	B21						
D_CP(10)	B27						
D_CP(11)	C28						
D_CP(12)	A25						
D_CP(13)	C24						
D_CP(14)	A28						
D_CP(15)	B30						

Copyright © 2017, Texas Instruments Incorporated

Pin Functions[1] (continued)

PIN		I/O[2]	SIGNAL	DATA RATE	INTERNAL TERMINATION	DESCRIPTION	TRACE LENGTH (mil)
NAME	NO.						
D_DN(0)	V25	I	LVDS	DDR	Differential	Data negative	805.0
D_DN(1)	V28						
D_DN(2)	T30						
D_DN(3)	V27						
D_DN(4)	U30						
D_DN(5)	W23						
D_DN(6)	R27						
D_DN(7)	T28						
D_DN(8)	V20						
D_DN(9)	R28						
D_DN(10)	L27						
D_DN(11)	N28						
D_DN(12)	M28						
D_DN(13)	V18						
D_DN(14)	Z26						
D_DN(15)	Z28						
D_DP(0)	V24	I	LVDS	DDR	Differential	Data positive	805.0
D_DP(1)	V29						
D_DP(2)	T29						
D_DP(3)	W27						
D_DP(4)	V30						
D_DP(5)	W24						
D_DP(6)	T27						
D_DP(7)	U28						
D_DP(8)	V19						
D_DP(9)	R29						
D_DP(10)	M27						
D_DP(11)	P28						
D_DP(12)	M29						
D_DP(13)	V17						
D_DP(14)	Z25						
D_DP(15)	Z27						
SCTRL_AN	G1	NC	LVDS	DDR	Differential	No connect	805.0
SCTRL_AP	F1						
SCTRL_BN	V5						
SCTRL_BP	V4						
SCTRL_CN	C26	I	LVDS	DDR	Differential	Serial control negative	805.0
SCTRL_CP	C27	I	LVDS	DDR	Differential	Serial control positive	805.0
SCTRL_DN	P30	I	LVDS	DDR	Differential	Serial control negative	805.0
SCTRL_DP	R30	I	LVDS	DDR	Differential	Serial control positive	805.0
DCLK_AN	H2	NC	LVDS		Differential	No connect	805.0
DCLK_AP	H1						
DCLK_BN	V6						
DCLK_BP	V7						
DCLK_CN	D27	I	LVDS		Differential	Clock negative	805.0
DCLK_CP	E27	I	LVDS		Differential	Clock positive	805.0

Copyright © 2017, Texas Instruments Incorporated

Pin Functions[1] (continued)

PIN		I/O[2]	SIGNAL	DATA RATE	INTERNAL TERMINATION	DESCRIPTION	TRACE LENGTH (mil)
NAME	NO.						
DCLK_DN	N29	I	LVDS		Differential	Clock negative	805.0
DCLK_DP	N30	I	LVDS		Differential	Clock positive	805.0
SCPCLK	A10	I	LVCMOS		Pull down	Serial communications port clock. Active only when SCPENZ is logic low.	
SCPDI	A12	I	LVCMOS	SDR	Pull down	Serial communications port Data Input. Synchronous to SCPCLK rising edge.	
SCPENZ	C10	I	LVCMOS		Pull down	Serial communications port enable active low.	
SCPDO	A11	O	LVCMOS	SDR		Serial communications port Output.	
RESET_ADDR(0)	Z13	I	LVCMOS		Pull down	Reset driver address select	
RESET_ADDR(1)	W13						
RESET_ADDR(2)	V10						
RESET_ADDR(3)	W14						
RESET_MODE(0)	W9	I	LVCMOS		Pull down	Reset driver mode select	
RESET_SEL(0)	V14					Reset driver level select	
RESET_SEL(1)	Z8					Reset driver level select	
RESET_STROBE	Z9	I	LVCMOS		Pull down	Rising edge latches in RESET_ADDR, RESET_MODE, & RESET_SEL	
PWRDNZ	A8	I	LVCMOS		Pull down	Active low device reset	
RESET_OEZ	W15	I	LVCMOS		Pull up	Active low Output enable for internal reset driver circuits	
RESET_IRQZ	V16	O	LVCMOS			Active low Output interrupt to DLP display controller	
EN_OFFSET	C9	O	LVCMOS			Active high enable for external VOFFSET regulator	
PG_OFFSET	A9	I	LVCMOS		Pull up	Active low fault from external VOFFSET regulator	
TEMP_N	B18		Analog			Temperature sensor diode cathode	
TEMP_P	B17		Analog			Temperature sensor diode anode	
RESERVED	D12, D13, D14, D15, D16, D17, D18, D19, U12, U13, U14, U15	NC	Analog		Pull Down	Do not connect on DLP system board. No connect. No electrical connections from CMOS bond pad to package pin.	
No Connect	U16, U17, U18, U19	NC				No connect. No electrical connection from CMOS bond pad to package pin.	
RESERVED_BA	W11	O	LVCMOS			Do not connect on DLP system board	
RESERVED_BB	B11						
RESERVED_BC	Z20						
RESERVED_BD	C18						
RESERVED_PFE	A18	I	LVCMOS		Pull down	Connect to ground on DLP system board.	
RESERVED_TM	C8						
RESERVED_TP0	Z19	I	Analog			Do not connect on DLP system board	
RESERVED_TP1	W20						
RESERVED_TP2	W19						
VBIAS[3]	C15, C16, V11, V12	P	Analog			Supply voltage for Positive Bias level of micromirror reset signal.	
VRESET[3]	G4, H4, J1, K1	P	Analog			Supply voltage for Negative Reset level of micromirror reset signal	

(3) V_{BIAS}, V_{CC}, V_{OFFSET}, and V_{RESET} power supplies must be connected for proper DMD operation.

Copyright © 2017, Texas Instruments Incorporated

Pin Functions[1] (continued)

PIN		I/O[2]	SIGNAL	DATA RATE	INTERNAL TERMINATION	DESCRIPTION	TRACE LENGTH (mil)
NAME	NO.						
VOFFSET[3]	A30, B2, M30, Z1, Z30	P	Analog			Supply voltage for HVCMOS logic. Supply voltage for positive offset level of micromirror reset signal. Supply voltage for stepped high voltage at micromirror address electrodes.	
VCC[3]	A24, A7, B10, B13, B16, B19, B22, B28, B5, C17, C20, D4, J29, K2, L29, M2, N27, U27, V13, V15, V22, W17, W21, W26, W29, W3, Z18, Z23, Z29, Z7	P	Analog			Supply voltage for LVCMOS core. Supply voltage for positive offset level of micromirror reset signal during Power down. Supply voltage for normal high level at micromirror address electrodes.	
VSS[4]	A13, A22, A23, B12, B14, B15, B20, B23, B26, B29, B3, B6, B9, C19, C21, C5, D2, G2, J28, K3, L28, L30, M3, P27, P29, U29, V21, V23, V26, W12, W16, W18, W2, W22, W25, W28, W30, W5, W8, Z21, Z22, Z24	G				Device ground. Common return for all power.	

(4) V_{SS} must be connected for proper DMD operation.

Copyright © 2017, Texas Instruments Incorporated

6 Specifications

6.1 Absolute Maximum Ratings

Over operating free-air temperature range (unless otherwise noted)

		MIN	MAX	UNIT
SUPPLY VOLTAGES				
V_{CC}	Supply voltage for LVCMOS core logic(1)	–0.5	2.3	V
V_{OFFSET}	Supply voltage for HVCMOS and micromirror electrode(1)(2)	–0.5	11	V
V_{BIAS}	Supply voltage for micromirror electrode(1)	–0.5	19	V
V_{RESET}	Supply voltage for micromirror electrode(1)	–15	-0.3	V
$\lvert V_{BIAS} – V_{OFFSET} \rvert$	Supply voltage difference (absolute value)(3)		11	V
$\lvert V_{BIAS} – V_{RESET} \rvert$	Supply voltage difference (absolute value)(4)		34	V
INPUT VOLTAGES				
	Input voltage for all other LVCMOS input pins(1)	–0.5	V_{CC} + 0.5	V
$\lvert V_{ID} \rvert$	Input differential voltage (absolute value)(5)		500	mV
I_{ID}	Input differential current(6)		6.3	mA
Clocks				
f_{CLOCK}	Clock frequency for LVDS interface, DCLK_C		400	MHz
f_{CLOCK}	Clock frequency for LVDS interface, DCLK_D		400	MHz
ENVIRONMENTAL				
T_{ARRAY} and T_{WINDOW}	Temperature, operating(7)	0	90	°C
	Temperature, non–operating(7)	–40	90	°C
$\lvert T_{DELTA} \rvert$	Absolute Temperature difference between any point on the window edge and the ceramic test point TP1 (8)		30	°C
T_{DP}	Dew Point Temperature, operating and non–operating (noncondensing)		81	°C

(1) All voltages are referenced to common ground V_{SS}. V_{BIAS}, V_{CC}, V_{OFFSET}, and V_{RESET} power supplies are all required for proper DMD operation. V_{SS} must also be connected.
(2) V_{OFFSET} supply transients must fall within specified voltages.
(3) Exceeding the recommended allowable voltage difference between V_{BIAS} and V_{OFFSET} may result in excessive current draw.
(4) Exceeding the recommended allowable voltage difference between V_{BIAS} and V_{RESET} may result in excessive current draw.
(5) This maximum LVDS input voltage rating applies when each input of a differential pair is at the same voltage potential.
(6) LVDS differential inputs must not exceed the specified limit or damage may result to the internal termination resistors.
(7) The highest temperature of the active array (as calculated using *Micromirror Array Temperature Calculation*) or of any point along the window edge as defined in Figure 10. The locations of thermal test points TP2, TP3, TP4 and TP5 in Figure 10 are intended to measure the highest window edge temperature. If a particular application causes another point on the window edge to be at a higher temperature, that point should be used.
(8) Temperature difference is the highest difference between the ceramic test point 1 (TP1) and anywhere on the window edge as shown in Figure 10. The window test points TP2, TP3, TP4 and TP5 shown in Figure 10 are intended to result in the worst case difference. If a particular application causes another point on the window edge to result in a larger difference temperature, that point should be used.

6.2 Storage Conditions

Applicable for the DMD as a component or non-operating in a system

		MIN	MAX	UNIT
T_{stg}	DMD storage temperature	–40	80	°C
T_{DP-AVG}	Average dew point temperature, (non-condensing) (1)		28	°C
T_{DP-MAX}	Elevated dew point temperature range , (non-condensing) (2)	28	36	°C
CT_{ELR}	Cumulative time in elevated dew point temperature range		24	Months

(1) The average over time (including storage and operating) that the device is not in the elevated dew point temperature range.
(2) Exposure to dew point temperatures in the elevated range during storage and operation should be limited to less than a total cumulative time of CT_{ELR}.

Copyright © 2017, Texas Instruments Incorporated

6.3 ESD Ratings

			VALUE	UNIT
$V_{(ESD)}$	Electrostatic discharge	Human-body model (HBM), per ANSI/ESDA/JEDEC JS-001[1]	±2000	V
		Charged device model (CDM), per JEDEC specification JESD22-C101[2]	±500	

(1) JEDEC document JEP155 states that 500-V HBM allows safe manufacturing with a standard ESD control process.
(2) JEDEC document JEP157 states that 250-V CDM allows safe manufacturing with a standard ESD control process.

6.4 Recommended Operating Conditions

Over operating free-air temperature range (unless otherwise noted). The functional performance of the device specified in this data sheet is achieved when operating the device within the limits defined by this table. No level of performance is implied when operating the device above or below these limits.

		MIN	NOM	MAX	UNIT
VOLTAGE SUPPLY					
V_{CC}	LVCMOS logic supply voltage[1]	1.65	1.8	1.95	V
V_{OFFSET}	Mirror electrode and HVCMOS voltage[1][2]	9.5	10	10.5	V
V_{BIAS}	Mirror electrode voltage[1]	17.5	18	18.5	V
V_{RESET}	Mirror electrode voltage[1]	–14.5	–14	–13.5	V
$\lvert V_{BIAS} - V_{OFFSET} \rvert$	Supply voltage difference (absolute value)[3]			10.5	V
$\lvert V_{BIAS} - V_{RESET} \rvert$	Supply voltage difference (absolute value)[4]			33	V
LVCMOS INTERFACE					
$V_{IH(DC)}$	DC input high voltage[5]	0.7 × V_{CC}		V_{CC} + 0.3	V
$V_{IL(DC)}$	DC input low voltage[5]	–0.3		0.3 × V_{CC}	V
$V_{IH(AC)}$	AC input high voltage[5]	0.8 × V_{CC}		V_{CC} + 0.3	V
$V_{IL(AC)}$	AC input low voltage[5]	–0.3		0.2 × V_{CC}	V
t_{PWRDNZ}	PWRDNZ pulse duration[6]	10			ns
SCP INTERFACE					
f_{SCPCLK}	SCP clock frequency[7]			500	kHz
t_{SCP_PD}	Propagation delay, Clock to Q, from rising–edge of SCPCLK to valid SCPDO[8]	0		900	ns
$t_{SCP_NEG_ENZ}$	Time between falling-edge of SCPENZ and the first rising- edge of SCPCLK	1			µs
$t_{SCP_POS_ENZ}$	Time between falling-edge of SCPCLK and the rising-edge of SCPENZ	1			µs
t_{SCP_DS}	SCPDI Clock setup time (before SCPCLK falling edge)[8]	800			ns
t_{SCP_DH}	SCPDI Hold time (after SCPCLK falling edge)[8]	900			ns
$t_{SCP_PW_ENZ}$	SCPENZ inactive pulse duration (high level)	2			µs

(1) All voltages are referenced to common ground VSS. VBIAS, VCC, VOFFSET, and VRESET power supplies are all required for proper DMD operation. VSS must also be connected.
(2) VOFFSET supply transients must fall within specified max voltages.
(3) To prevent excess current, the supply voltage difference |VBIAS – VOFFSET| must be less than specified limit. See *Power Supply Recommendations*, Figure 13, and Table 8.
(4) To prevent excess current, the supply voltage difference |VBIAS – VRESET| must be less than specified limit. See *Power Supply Recommendations*, Figure 13, and Table 8.
(5) Low-speed interface is LPSDR and adheres to the Electrical Characteristics and AC/DC Operating Conditions table in JEDEC Standard No. 209B, "Low-Power Double Data Rate (LPDDR)" JESD209B.Tester Conditions for VIH and VIL.
(a) Frequency = 60 MHz. Maximum Rise Time = 2.5 ns @ (20% - 80%)
(b) Frequency = 60 MHz. Maximum Fall Time = 2.5 ns @ (80% - 20%)
(6) PWRDNZ input pin resets the SCP and disables the LVDS receivers. PWRDNZ input pin overrides SCPENZ input pin and tristates the SCPDO output pin.
(7) The SCP clock is a gated clock. Duty cycle must be 50% ± 10%. SCP parameter is related to the frequency of DCLK.
(8) See Figure 2.

Copyright © 2017, Texas Instruments Incorporated

Recommended Operating Conditions (continued)

Over operating free-air temperature range (unless otherwise noted). The functional performance of the device specified in this data sheet is achieved when operating the device within the limits defined by this table. No level of performance is implied when operating the device above or below these limits.

		MIN	NOM	MAX	UNIT
LVDS INTERFACE					
f_{CLOCK}	Clock frequency for LVDS interface (all channels), DCLK (9)			400	MHz
$\|V_{ID}\|$	Input differential voltage (absolute value) (10)	150	300	440	mV
V_{CM}	Common mode voltage (10)	1100	1200	1300	mV
V_{LVDS}	LVDS voltage (10)	880		1520	mV
t_{LVDS_RSTZ}	Time required for LVDS receivers to recover from PWRDNZ			2000	ns
Z_{IN}	Internal differential termination resistance	80	100	120	Ω
Z_{LINE}	Line differential impedance (PWB/trace)	90	100	110	Ω
ENVIRONMENTAL					
T_{ARRAY}	Array temperature, Long–term operational (11)(12)(13)(14)	10		40 to 70 (13)	°C
	Array temperature, Short–term operational (12)(15)	0		10	°C
T_{WINDOW}	Window temperature – operational (16)			85	°C
$\|T_{DELTA}\|$	Absolute temperature difference between any point on the window edge and the ceramic test point TP1 (17)(18)			14	°C
$T_{DP\ -AVG}$	Average dew point average temperature (non–condensing) (19)			28	°C
T_{DP-MAX}	Elevated dew point temperature range (non-condensing) (20)	28		36	°C
CT_{ELR}	Cumulative time in elevated dew point temperature range			24	Months
L	Operating system luminance (18)			4000	lm
ILL_{UV}	Illumination Wavelengths < 395 nm (11)		0.68	2.00	mW/cm^2
ILL_{VIS}	Illumination Wavelengths between 395 nm and 800 nm		Thermally limited		mW/cm^2
ILL_{IR}	Illumination Wavelengths > 800 nm			10	mW/cm^2
ILL_{θ}	Illumination Marginal Ray Angle (16)			55	deg

(9) See LVDS Timing Requirements in *Timing Requirements* and Figure 6.
(10) See Figure 5 LVDS Waveform Requirements.
(11) Simultaneous exposure of the DMD to the maximum *Recommended Operating Conditions* for temperature and UV illumination reduces device lifetime.
(12) The array temperature cannot be measured directly and must be computed analytically from the temperature measured at test point 1 (TP1) shown in Figure 10 and the package thermal resistance *Micromirror Array Temperature Calculation*.
(13) Per Figure 1, the maximum operational array temperature should be derated based on the micromirror landed duty cycle that the DMD experiences in the end application. See *Micromirror Landed-On/Landed-Off Duty Cycle* for a definition of micromirror landed duty cycle.
(14) Long-term is defined as the usable life of the device.
(15) Array temperatures beyond those specified as long-term are recommended for short-term conditions only (power-up). Short-term is defined as cumulative time over the usable life of the device and is less than 500 hours.
(16) The maximum marginal ray angle of the incoming illumination light at any point in the micromirror array, including Pond of Micromirrors (POM), should not exceed 55 degrees from the normal to the device array plane. The device window aperture has not necessarily been designed to allow incoming light at higher maximum angles to pass to the micromirrors, and the device performance has not been tested nor qualified at angles exceeding this. Illumination light exceeding this angle outside the micromirror array (including POM) will contribute to thermal limitations described in this document, and may negatively affect lifetime.
(17) Temperature difference is the highest difference between the ceramic test point 1 (TP1) and anywhere on the window edge as shown in Figure 10. The window test points TP2, TP3, TP4 and TP5 shown in Figure 10 are intended to result in the worst case difference temperature. If a particular application causes another point on the window edge to result in a larger difference in temperature, that point should be used.
(18) DMD is qualified at the combination of the maximum temperature and maximum lumens specified. Operation of the DMD outside of these limits has not been tested.
(19) The average over time (including storage and operating) that the device is not in the 'elevated dew point temperature range.
(20) Exposure to dew point temperatures in the elevated range during storage and operation should be limited to less than a total cumulative time of CT_{ELR}.

Copyright © 2017, Texas Instruments Incorporated

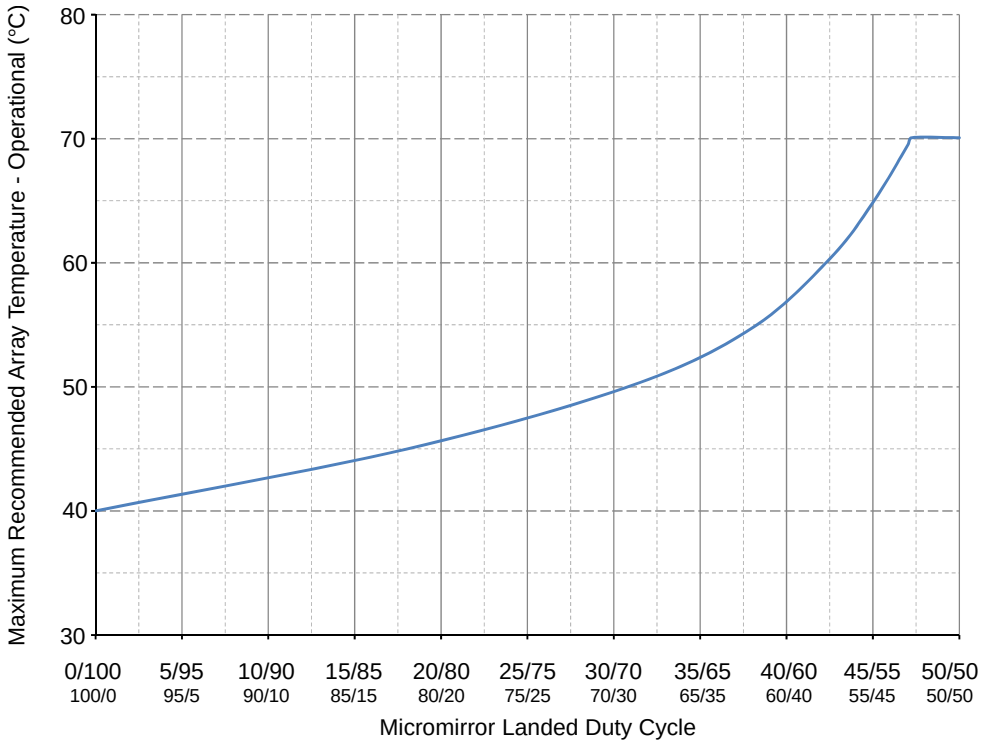

Figure 1. Maximum Recommended Array Temperature - Derating Curve

6.5 Thermal Information

THERMAL METRIC	DLP470NE FXH Package 257 PINS	UNIT
Thermal resistance, active area to test point 1 (TP1)(1)	0.90	°C/W

(1) The DMD is designed to conduct absorbed and dissipated heat to the back of the package. The cooling system must be capable of maintaining the package within the temperature range specified in the *Recommended Operating Conditions*. The total heat load on the DMD is largely driven by the incident light absorbed by the active area; although other contributions include light energy absorbed by the window aperture and electrical power dissipation of the array. Optical systems should be designed to minimize the light energy falling outside the window clear aperture since any additional thermal load in this area can significantly degrade the reliability of the device.

Copyright © 2017, Texas Instruments Incorporated

6.6 Electrical Characteristics

Over operating free-air temperature range (unless otherwise noted)

PARAMETER		TEST CONDITIONS	MIN	TYP	MAX	UNIT
V_{OH}	High level output voltage	V_{CC} = 1.8 V, I_{OH} = –2 mA	0.8 x V_{CC}			V
V_{OL}	Low level output voltage	V_{CC} = 1.95 V, I_{OL} = 2 mA			0.2 x V_{CC}	V
I_{OZ}	High impedance output current	V_{CC} = 1.95 V	–40		25	µA
I_{IL}	Low level input current	V_{CC} = 1.95 V, V_I = 0	–1			µA
I_{IH}	High level input current (1)(2)	V_{CC} = 1.95 V, V_I = V_{CC}			110	µA
I_{CC}	Supply current VCC	V_{CC} = 1.95 V			715	mA
I_{OFFSET}	Supply current VOFFSET (2)	V_{OFFSET} = 10.5 V			7	mA
I_{BIAS}	Supply current VBIAS (2) (3)	V_{BIAS} = 18.5 V			2.75	mA
I_{RESET}	Supply current VRESET (3)	V_{RESET} = –14.5 V			-5	mA
P_{CC}	Supply power dissipation V_{CC}	V_{CC} = 1.95 V			1394.25	mW
P_{OFFSET}	Supply power dissipation V_{OFFSET} (2)	V_{OFFSET} = 10.5 V			73.50	mW
P_{BIAS}	Supply power dissipation V_{BIAS} (2)(3)	V_{BIAS} = 18.5 V			50.87	mW
P_{RESET}	Supply power dissipation V_{RESET} (3)	V_{RESET} = –14.5 V			72.5	mW
P_{TOTAL}	Supply power dissipation V_{TOTAL}				1591.12	mW

(1) Applies to LVCMOS pins only. Excludes LVDS pins and MBRST (15:0) pins.
(2) To prevent excess current, the supply voltage difference |VBIAS – VOFFSET| must be less than the specified limits listed in the *Recommended Operating Conditions* table.
(3) To prevent excess current, the supply voltage difference |VBIAS – VRESET| must be less than specified limit in *Recommended Operating Conditions*.

6.7 Capacitance at Recommended Operating Conditions

over operating free-air temperature range (unless otherwise noted)

PARAMETER		TEST CONDITIONS	MIN	TYP	MAX	UNIT
C_{I_lvds}	LVDS input capacitance 2× LVDS	f = 1 MHz			20	pF
$C_{I_nonlvds}$	Non-LVDS input capacitance 2× LVDS	f = 1 MHz			20	pF
C_{I_tdiode}	Temperature diode input capacitance 2× LVDS	f = 1 MHz			30	pF
C_O	Output capacitance	f = 1 MHz			20	pF

Copyright © 2017, Texas Instruments Incorporated

6.8 Timing Requirements

			MIN	NOM	MAX	UNIT
SCP(1)						
t_r	Rise slew rate	20% to 80% reference points	1		3	V/ns
t_f	Fall slew rate	80% to 20% reference points	1		3	V/ns
LVDS(2)						
t_r	Rise slew rate	20% to 80% reference points	0.7	1		V/ns
t_f	Fall slew rate	80% to 20% reference points	0.7	1		V/ns
t_C	Clock cycle	DCLK_C,LVDS pair	2.5			ns
		DCLK_D, LVDS pair	2.5			ns
t_W	Pulse duration	DCLK_C LVDS pair	1.19	1.25		ns
		DCLK_D LVDS pair	1.19	1.25		ns
t_{Su}	Setup time	D_C(15:0) before DCLK_C, LVDS pair	0.275			ns
		D_D(15:0) before DCLK_D, LVDS pair	0.275			ns
		SCTRL_C before DCLK_C, LVDS pair	0.275			ns
		SCTRL_D before DCLK_D, LVDS pair	0.275			ns
t_h	Hold time	D_C(15:0) after DCLK_C, LVDS pair	0.195			ns
		D_D(15:0) after DCLK_D, LVDS pair	0.195			ns
		SCTRL_C after DCLK_C, LVDS pair	0.195			ns
		SCTRL_D after DCLK_D, LVDS pair	0.195			ns
LVDS(2)						
t_{SKEW}	Skew time	Channel D relative to Channel C(3)(4), LVDS pair	–1.25		1.25	ns

(1) See Figure 3 for Rise Time and Fall Time for SCP.
(2) See Figure 5 for Timing Requirements for LVDS.
(3) Channel C (Bus C) includes the following LVDS pairs: DCLK_CN and DCLK_CP, SCTRL_CN and SCTRL_CP, D_CN(15:0) and D_CP(15:0).
(4) Channel D (Bus D) includes the following LVDS pairs: DCLK_DN and DCLK_DP, SCTRL_DN and SCTRL_DP, D_DN(15:0) and D_DP(15:0).

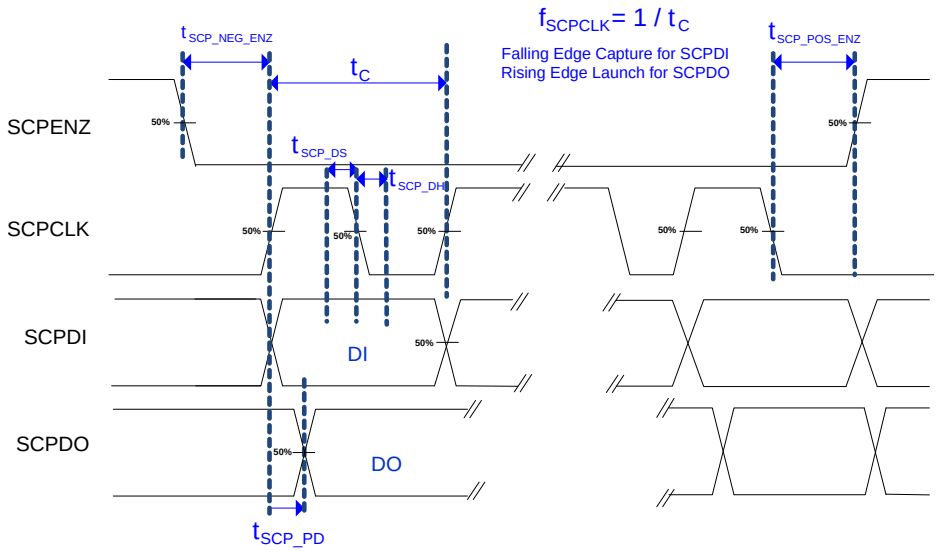

Figure 2. SCP Timing Requirements

See *Recommended Operating Conditions* for f_{SCPCLK}, t_{SCP_DS}, t_{SCP_DH} and t_{SCP_PD} specifications.

Copyright © 2017, Texas Instruments Incorporated

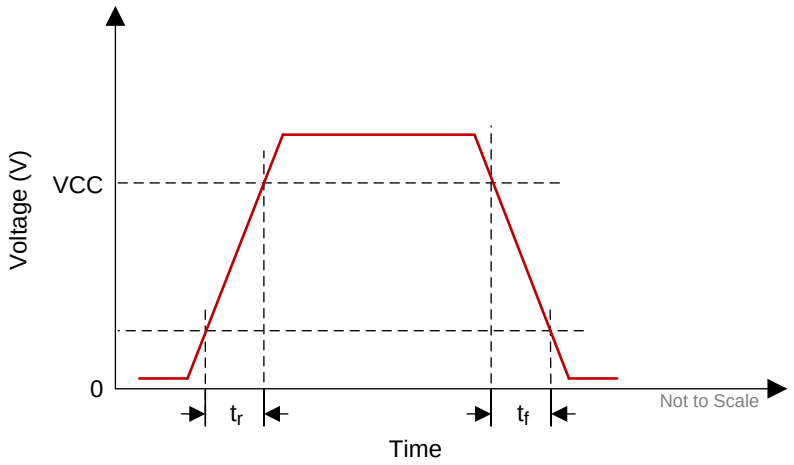

Figure 3. SCP Requirements for Rise and Fall

See *Timing Requirements* for t_r and t_f specifications and conditions.

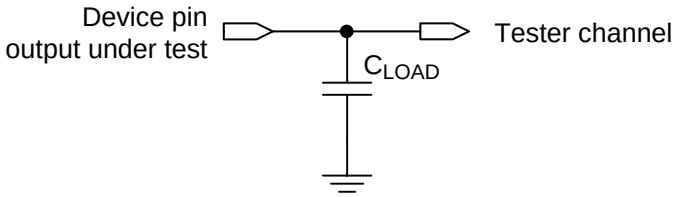

Figure 4. Test Load Circuit for Output Propagation Measurement

For output timing analysis, the tester pin electronics and its transmission line effects must be taken into account. System designers should use IBIS or other simulation tools to correlate the timing reference load to a system environment.

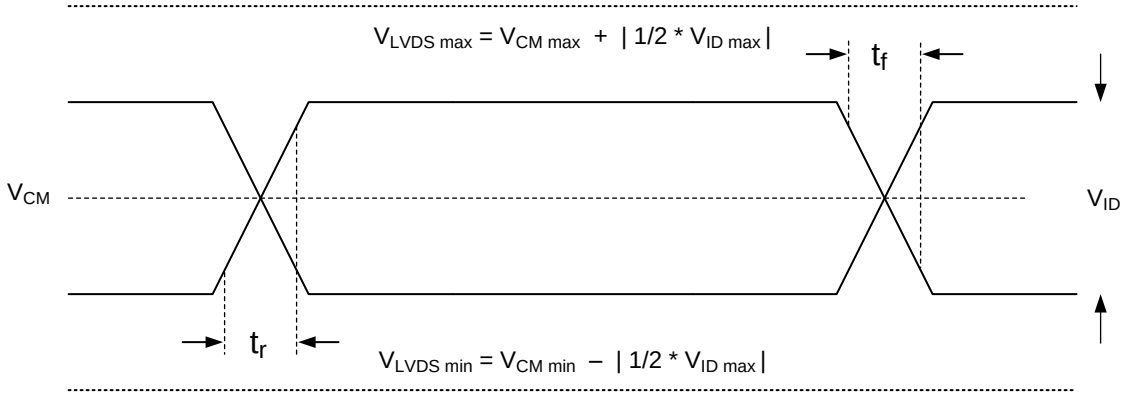

Figure 5. LVDS Waveform Requirements

See *Recommended Operating Conditions* for V_{CM}, V_{ID}, and V_{LVDS} specifications and conditions.

Copyright © 2017, Texas Instruments Incorporated

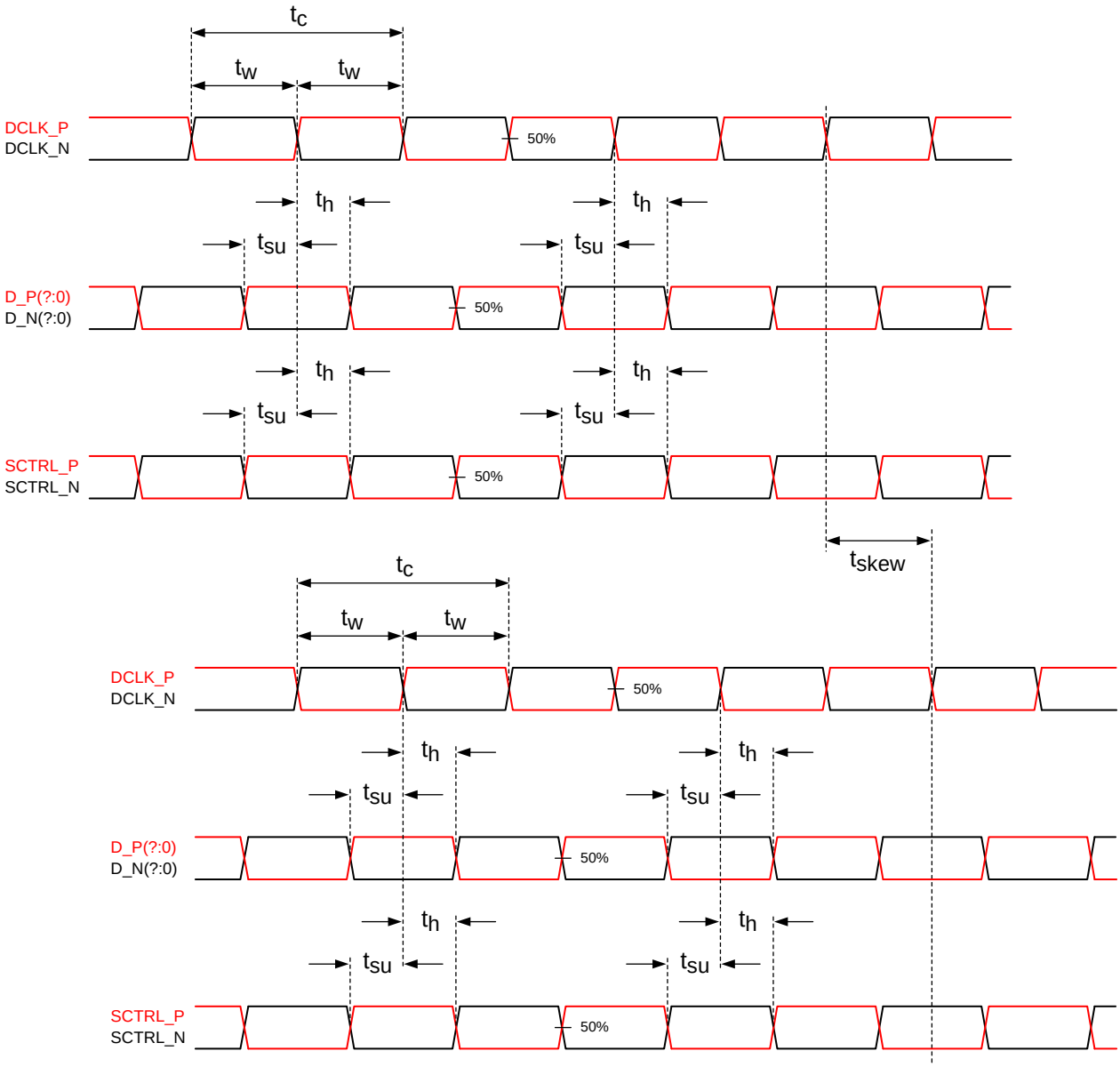

Figure 6. Timing Requirements

See *Timing Requirements* for timing requirements and LVDS pairs per channel (bus) defining D_P(?:0) and D_N(?:0).

6.9 System Mounting Interface Loads

Table 1. System Mounting Interface Loads

PARAMETER	MIN	NOM	MAX	UNIT
Thermal interface area			12	kg
Electrical interface area			25	kg

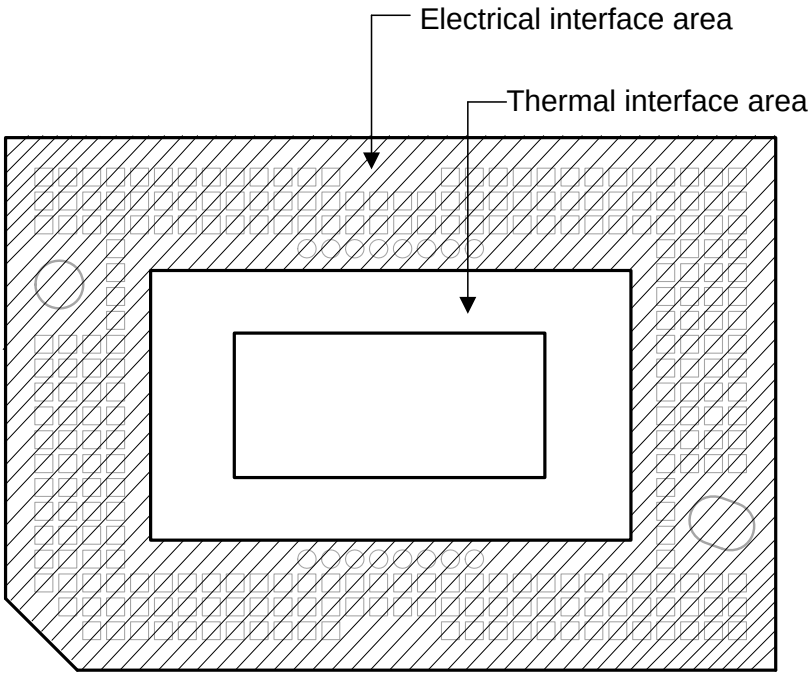

Figure 7. System Mounting Interface Loads

6.10 Micromirror Array Physical Characteristics

Table 2. Micromirror Array Physical Characteristics

PARAMETER DESCRIPTION		VALUE	UNIT
Number of active columns (1)	M	1920	micromirrors
Number of active rows (1)	N	1080	micromirrors
Micromirror (pixel) pitch (1)	P	5.4	µm
Micromirror active array width (1)	Micromirror Pitch × number of active columns	10.368	mm
Micromirror active array height (1)	Micromirror Pitch × number of active rows	5.832	mm
Micromirror active border (Top / Bottom) (2)	Pond of micromirrors (POM)	80	micromirrors/side
Micromirror active border (Right / Left) (2)	Pond of micromirrors (POM)	84	micromirrors/side

(1) See Figure 8.
(2) The structure and qualities of the border around the active array includes a band of partially functional micromirrors referred to as the *Pond Of Mirrors* (POM). These micromirrors are structurally and/or electrically prevented from tilting toward the bright or ON state but still require an electrical bias to tilt toward the OFF state.

Copyright © 2017, Texas Instruments Incorporated

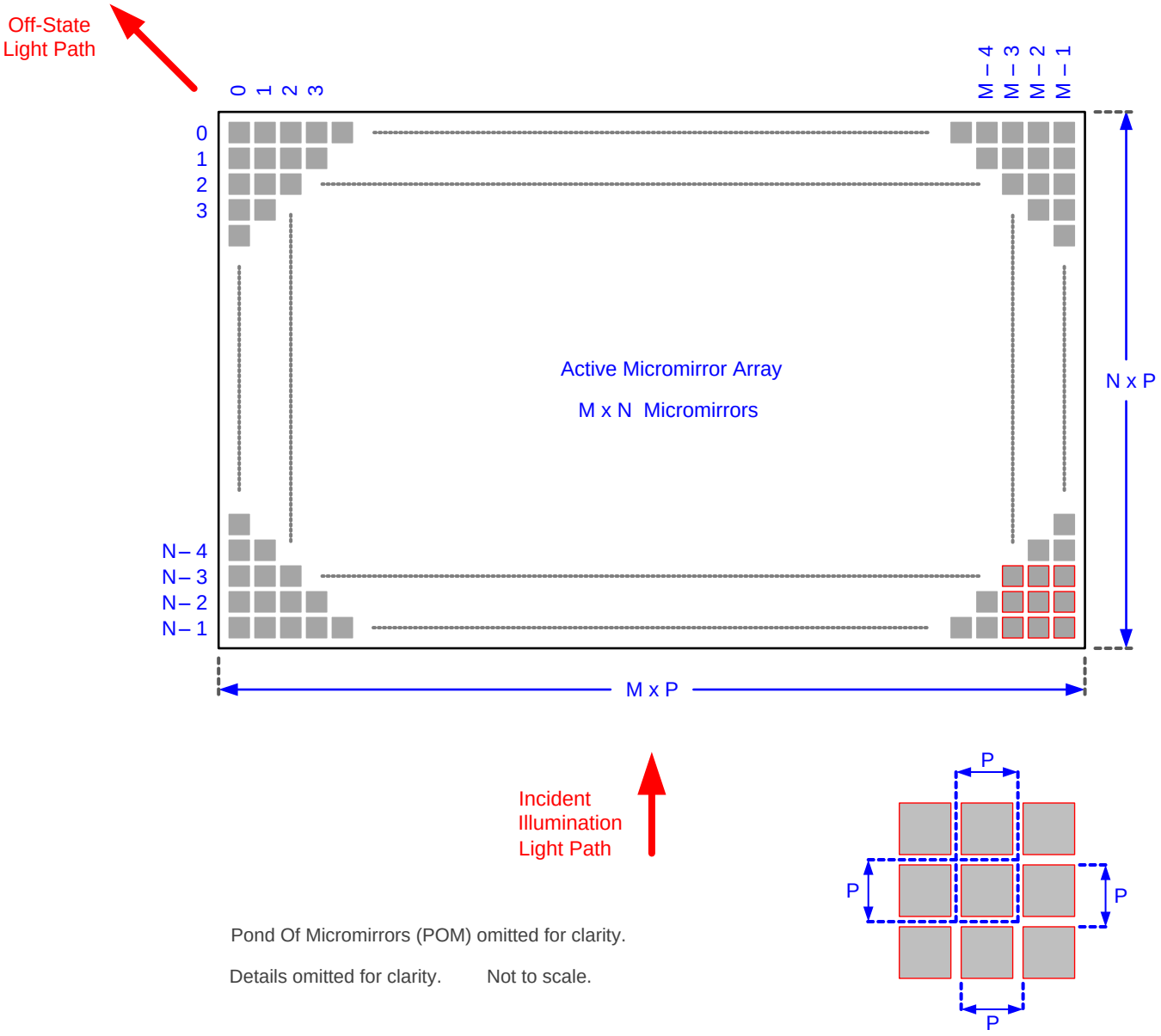

Figure 8. Micromirror Array Physical Characteristics

Refer to section *Micromirror Array Physical Characteristics* table for M, N, and P specifications.

6.11 Micromirror Array Optical Characteristics

Table 3. Micromirror Array Optical Characteristics

PARAMETER		MIN	NOM	MAX	UNIT
Mirror Tilt angle, variation device to device (1) (2)		15.6	17.0	18.4	degrees
Number of out-of-specification micromirrors (3)(4)	Adjacent micromirrors			0	micromirrors
	Non-Adjacent micromirrors			10	

(1) Limits on variability of micromirror tilt angle are critical in the design of the accompanying optical system. Variations in tilt angle within a device may result in apparent non-uniformities, such as line pairing and image mottling, across the projected image. Variations in the average tilt angle between devices may result in colorimetric and system contrast variations.
(2) See Figure 9.
(3) Efficiency numbers assume 34-degree illumination angle, F/1.7 illumination and collection cones, uniform source spectrum, and uniform pupil illumination. Efficiency numbers assume 100% electronic micromirror duty cycle and do not include optical overfill loss. The efficiency is a photopically-weighted number corresponding to 17.5degree tilt angle. Note that this number is specified under conditions described above and deviations from the specified conditions could result in decreased efficiency.
(4) An out-of-specification micromirror is defined as a micromirror that is unable to transition between the two landed states within the specified micromirror switching time.

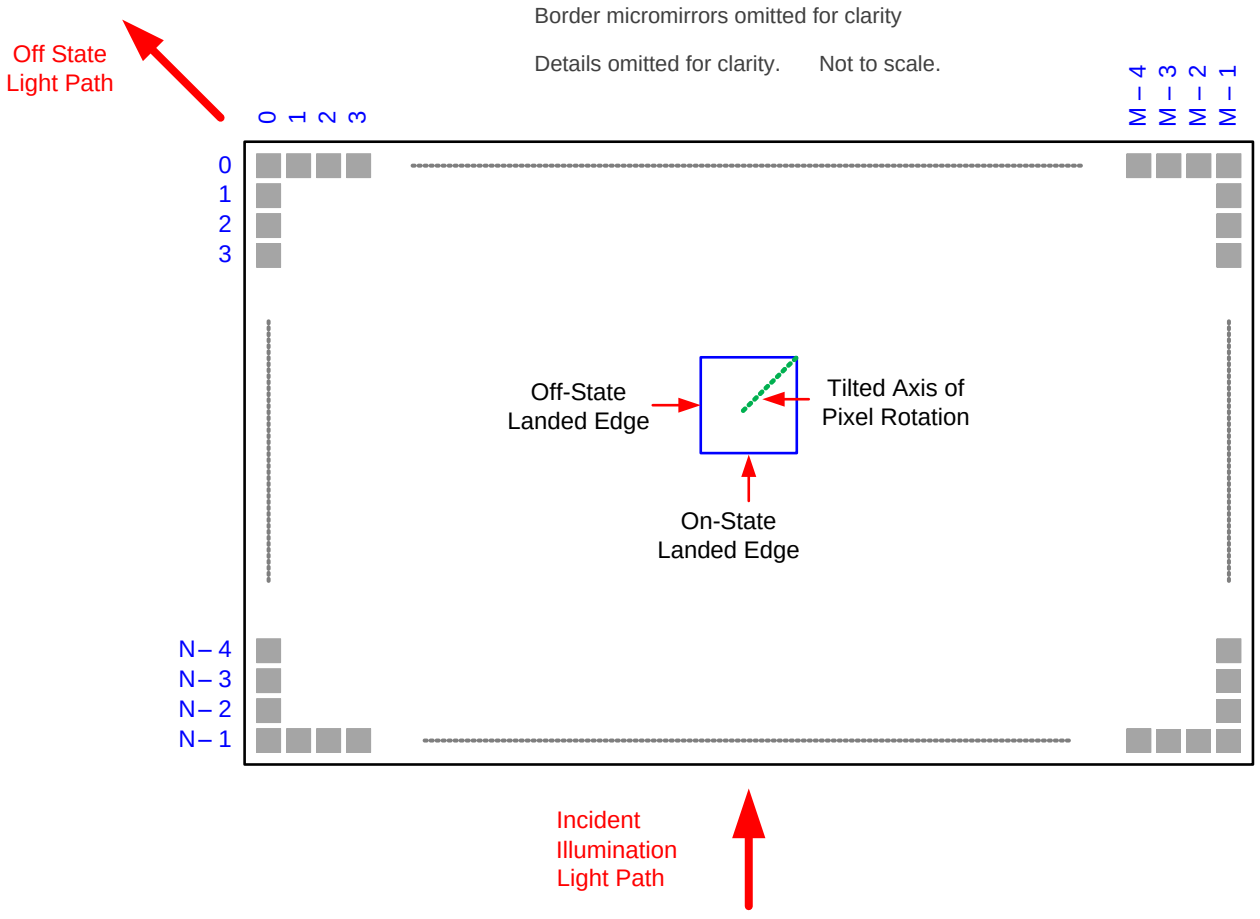

(1) Pond of Mirrors (POM) omitted for clarity.
(2) Refer to section *Micromirror Array Physical Characteristics* table for M, N, and P specifications.

Figure 9. Micromirror Landed Orientation and Tilt

Copyright © 2017, Texas Instruments Incorporated

6.12 Window Characteristics

Table 4. DMD Window Characteristics

DESCRIPTION	MIN	NOM
Window Material Designation		Corning Eagle XG
Window Refractive Index at 546.1 nm		1.5119
Window Transmittance, minimum within the wavelength range between 420 nm and 680 nm. Applies to all angles between 0° and 30° AOI. (1) (2)	97%	
Window Transmittance, average over the wavelength range 420 nm and 680 nm. Applies to all angles 30° and 45° AOI. (1) (2)	97%	

(1) Single-pass through both surfaces and glass.
(2) Angle of incidence (AOI) is the angle between an incident ray and the normal to a reflecting or refracting surface.

6.13 Chipset Component Usage Specification

Reliable function and operation of the DLP470NE DMD requires that it be used in conjunction with the other components of the applicable DLP chipset, including those components that contain or implement TI DMD control technology. TI DMD control technology is the TI technology and devices for operating or controlling a DLP DMD.

NOTE

TI assumes no responsibility for image quality artifacts or DMD failures caused by optical system operating conditions exceeding limits described previously.

Copyright © 2017, Texas Instruments Incorporated

7 Detailed Description

7.1 Overview

The DMD is a 0.47 inch diagonal spatial light modulator which consists of an array of highly reflective aluminum micromirrors. The DMD is an electrical input, optical output micro-optical-electrical-mechanical system (MEMS). The electrical interface is Low Voltage Differential Signaling (LVDS). The DMD consists of a two-dimensional array of 1-bit CMOS memory cells. The array is organized in a grid of M memory cell columns by N memory cell rows. Refer to the *Functional Block Diagram*. The positive or negative deflection angle of the micromirrors can be individually controlled by changing the address voltage of underlying CMOS addressing circuitry and micromirror reset signals (MBRST).

The DLP470NE DMD is part of the chipset comprising of the DLP470NE DMD, the DLPC4422 display controller and the DLPA100 power and motor driver. To ensure reliable operation, the DLP470NE DMD must always be used with the DLPC4422 display controller and the DLPA100 power and motor driver.

Copyright © 2017, Texas Instruments Incorporated

7.2 Functional Block Diagram

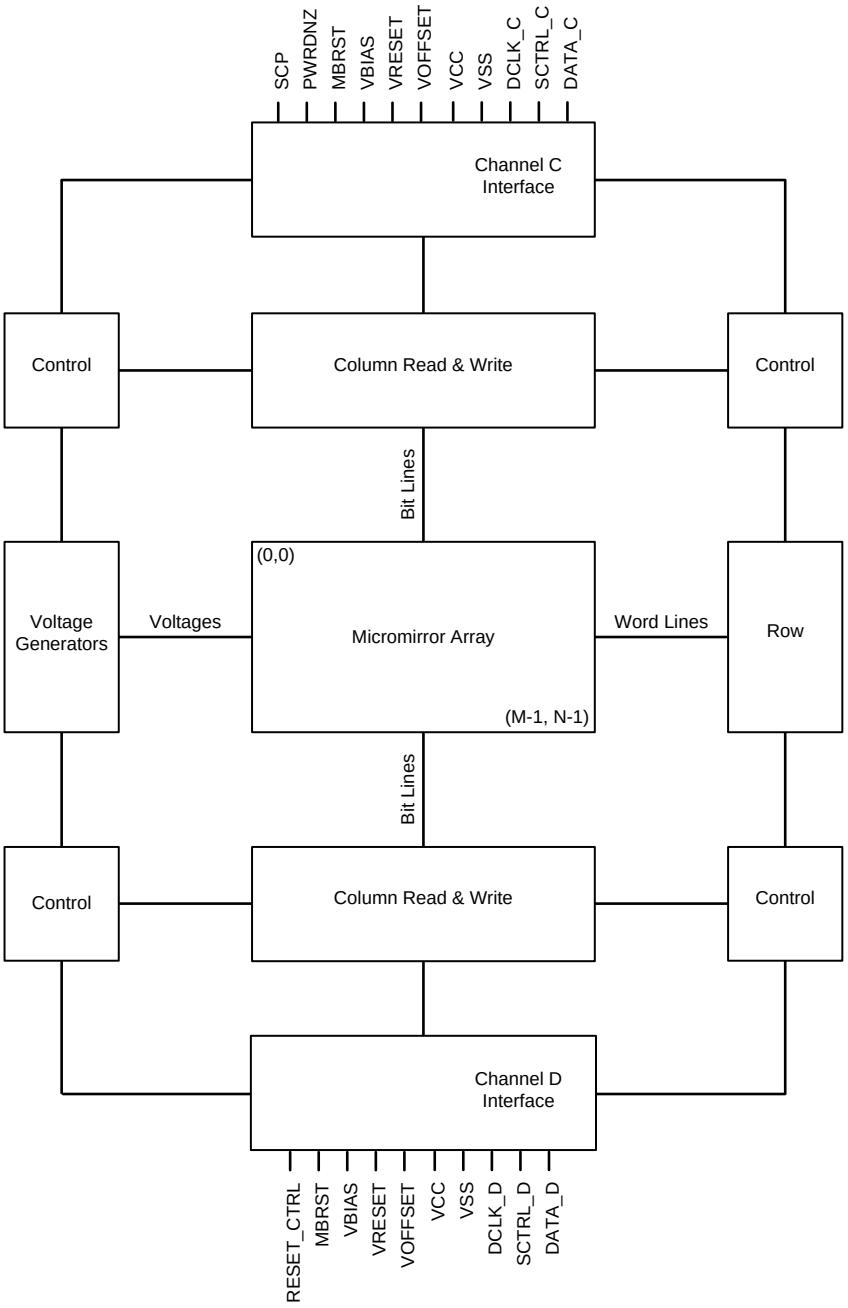

Copyright © 2017, Texas Instruments Incorporated

For pin details on Channels C, and D, refer to *Pin Configurations and Functions* and LVDS Interface section of *Timing Requirements*.

7.3 Feature Description

7.3.1 Power Interface

The DMD requires 5 DC voltages: DMD_P3P3V, DMD_P1P8V, VOFFSET, VRESET, and VBIAS. DMD_P3P3V is created by the DLPA100 power and motor driver and is used on the DMD board to create the other 4 DMD voltages, as well as powering various peripherals (TMP411, I2C, and TI level translators). DMD_P1P8V is created by the TI PMIC LP38513S and provides the VCC voltage required by the DMD. VOFFSET (10V), VRESET (-14V), and VBIAS(18V) are made by the TI PMIC TPS65145 and are supplied to the DMD to control the micromirrors.

7.3.2 Timing

The data sheet provides timing at the device pin. For output timing analysis, the tester pin electronics and its transmission line effects must be taken into account. Figure 4 shows an equivalent test load circuit for the output under test. Timing reference loads are not intended as a precise representation of any particular system environment or depiction of the actual load presented by a production test. System designers should use IBIS or other simulation tools to correlate the timing reference load to a system environment. The load capacitance value stated is only for characterization and measurement of AC timing signals. This load capacitance value does not indicate the maximum load the device is capable of driving.

7.4 Device Functional Modes

DMD functional modes are controlled by the DLPC4422 display controller. See the DLPC4422 display controller data sheet or contact a TI applications engineer.

7.5 Window Characteristics and Optics

7.5.1 Optical Interface and System Image Quality

TI assumes no responsibility for end-equipment optical performance. Achieving the desired end-equipment optical performance involves making trade-offs between numerous component and system design parameters. Optimizing system optical performance and image quality strongly relate to optical system design parameter trades. Although it is not possible to anticipate every conceivable application, projector image quality and optical performance is contingent on compliance to the optical system operating conditions described in the following sections.

7.5.1.1 Numerical Aperture and Stray Light Control

The angle defined by the numerical aperture of the illumination and projection optics at the DMD optical area should be the same. This angle should not exceed the nominal device micromirror tilt angle unless appropriate apertures are added in the illumination and/or projection pupils to block out flat-state and stray light from the projection lens. The micromirror tilt angle defines DMD capability to separate the "ON" optical path from any other light path, including undesirable flat-state specular reflections from the DMD window, DMD border structures, or other system surfaces near the DMD such as prism or lens surfaces. If the numerical aperture exceeds the micromirror tilt angle, or if the projection numerical aperture angle is more than two degrees larger than the illumination numerical aperture angle, objectionable artifacts in the display border and/or active area could occur.

7.5.1.2 Pupil Match

TI's optical and image quality specifications assume that the exit pupil of the illumination optics is nominally centered within 2° of the entrance pupil of the projection optics. Misalignment of pupils can create objectionable artifacts in the display border and/or active area, which may require additional system apertures to control, especially if the numerical aperture of the system exceeds the pixel tilt angle.

Copyright © 2017, Texas Instruments Incorporated

Window Characteristics and Optics (continued)

7.5.1.3 Illumination Overfill

The active area of the device is surrounded by an aperture on the inside DMD window surface that masks structures of the DMD chip assembly from normal view, and is sized to anticipate several optical operating conditions. Overfill light illuminating the window aperture can create artifacts from the edge of the window aperture opening and other surface anomalies that may be visible on the screen. The illumination optical system should be designed to limit light flux incident anywhere on the window aperture from exceeding approximately 10% of the average flux level in the active area. Depending on the particular system optical architecture, overfill light may have to be further reduced below the suggested 10% level in order to be acceptable.

Copyright © 2017, Texas Instruments Incorporated

7.6 Micromirror Array Temperature Calculation

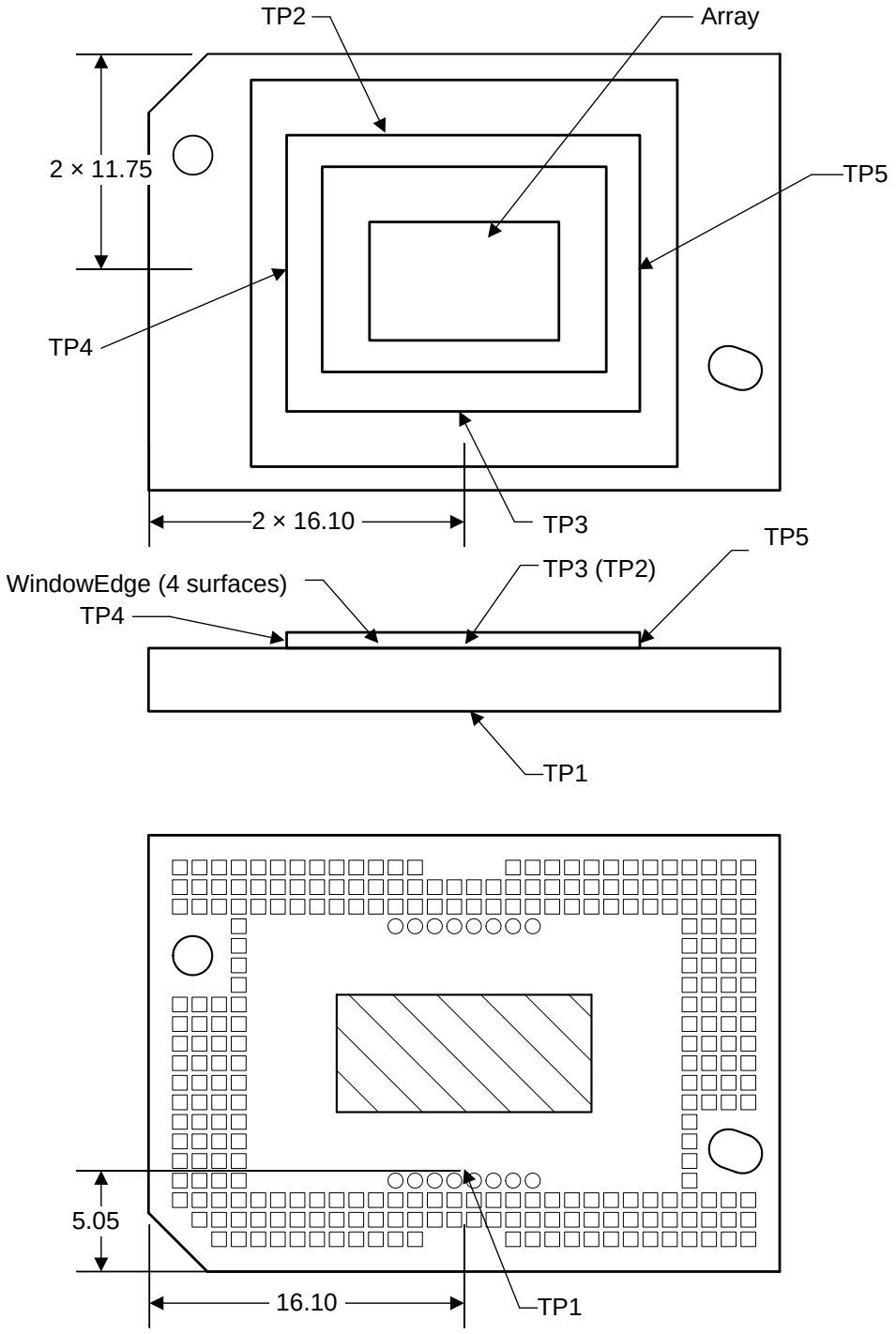

Figure 10. DMD Thermal Test Points

Copyright © 2017, Texas Instruments Incorporated

Micromirror Array Temperature Calculation (continued)

Micromirror array temperature can be computed analytically from measurement points on the outside of the package, the package thermal resistance, the electrical power, and the illumination heat load. The relationship between micromirror array temperature and the reference ceramic temperature is provided by the Equation 1 and Equation 2.

$$T_{ARRAY} = T_{CERAMIC} + (Q_{ARRAY} \times R_{ARRAY\text{-}TO\text{-}CERAMIC}) \quad (1)$$

$$Q_{ARRAY} = Q_{ELECTRICAL} + Q_{ILLUMINATION}$$

where

- T_{ARRAY} = computed array temperature (°C)
- $T_{CERAMIC}$ = measured ceramic temperature (°C) (TP1 location)
- $R_{ARRAY\text{-}TO\text{-}CERAMIC}$ = thermal resistance of package from array to ceramic TP1 (°C/Watt)
- Q_{ARRAY} = Total DMD power on the array (Watts) (electrical + absorbed)
- $Q_{ELECTRICAL}$ = nominal electrical power
- $Q_{ILLUMINATION} = (C_{L2W} \times SL)$
- C_{L2W} = Conversion constant for screen lumens to power on DMD (Watts/Lumen)
- SL = measured screen Lumens (2)

The electrical power dissipation of the DMD is variable and depends on the voltages, data rates and operating frequencies. A nominal electrical power dissipation to use when calculating array temperature is 0.9 Watts. The absorbed power from the illumination source is variable and depends on the operating state of the micromirrors and the intensity of the light source. The equations shown above are valid for a 1-Chip DMD system with projection efficiency from the DMD to the screen of 87%.

The conversion constant CL2W is based on array characteristics. It assumes a spectral efficiency of 300 lumens/Watt for the projected light and illumination distribution of 83.7% on the active array, and 16.3% on the array border.

Equation 3 through Equation 8 show sample calculations for typical projection application:

$$C_{L2W} = 0.00266 \quad (3)$$

$$SL = 4000 \text{ lm} \quad (4)$$

$$Q_{ELECTRICAL} = 0.9 \text{ W} \quad (5)$$

$$T_{CERAMIC} = 55.0°C \quad (6)$$

$$Q_{ARRAY} = 0.9 \text{ W} + (0.00266 \times 4000 \text{ lm}) = 11.54 \text{ W} \quad (7)$$

$$T_{ARRAY} = 55.0°C + (11.54 \text{ W} \times 0.90°C/W) = 65.39°C \quad (8)$$

7.7 Micromirror Landed-On/Landed-Off Duty Cycle

7.7.1 Definition of Micromirror Landed-On/Landed-Off Duty Cycle

The micromirror landed-on/landed-off duty cycle (landed duty cycle) denotes the amount of time (as a percentage) that an individual micromirror is landed in the On state versus the amount of time the same micromirror is landed in the OFF state.

As an example, a landed duty cycle of 100/0 indicates that the referenced pixel is in the ON state 100% of the time (and in the Off state 0% of the time); whereas 0/100 would indicate that the pixel is in the OFF state 100% of the time. Likewise, 50/50 indicates that the pixel is ON for 50% of the time (and OFF for 50% of the time).

Note that when assessing landed duty cycle, the time spent switching from one state (ON or OFF) to the other state (OFF or ON) is considered negligible and is thus ignored.

Since a micromirror can only be landed in one state or the other (ON or OFF), the two numbers (percentages) always add to 100.

Copyright © 2017, Texas Instruments Incorporated

Micromirror Landed-On/Landed-Off Duty Cycle (continued)

7.7.2 Landed Duty Cycle and Useful Life of the DMD

Knowing the long-term average landed duty cycle (of the end product or application) is important because subjecting all (or a portion) of the DMD micromirror array (also called the active array) to an asymmetric landed duty cycle for a prolonged period of time can reduce the DMD usable life.

Note that it is the symmetry/asymmetry of the landed duty cycle that is of relevance. The symmetry of the landed duty cycle is determined by how close the two numbers (percentages) are to being equal. For example, a landed duty cycle of 50/50 is perfectly symmetrical whereas a landed duty cycle of 100/0 or 0/100 is perfectly asymmetrical.

7.7.3 Landed Duty Cycle and Operational DMD Temperature

Operational DMD temperature and landed duty cycle interact to affect DMD usable life, and this interaction can be exploited to reduce the impact that an asymmetrical landed duty cycle has on the DMD usable life. This is quantified in the de-rating curve shown in Figure 1. The importance of this curve is that:

- All points along this curve represent the same usable life.
- All points above this curve represent lower usable life (and the further away from the curve, the lower the usable life).
- All points below this curve represent higher usable life (and the further away from the curve, the higher the usable life).

In practice, this curve specifies the Maximum Operating DMD Temperature that the DMD should be operated at for a given long-term average Landed Duty Cycle.

7.7.4 Estimating the Long-Term Average Landed Duty Cycle of a Product or Application

During a given period of time, the Landed Duty Cycle of a given pixel follows from the image content being displayed by that pixel.

For example, in the simplest case, when displaying pure-white on a given pixel for a given time period, that pixel operates under a 100/0 Landed Duty Cycle during that time period. Likewise, when displaying pure-black, the pixel operates under a 0/100 Landed Duty Cycle.

Between the two extremes (ignoring for the moment color and any image processing that may be applied to an incoming image), the Landed Duty Cycle tracks one-to-one with the gray scale value, as shown in Table 5.

Table 5. Grayscale Value and Landed Duty Cycle

GRAYSCALE VALUE	LANDED DUTY CYCLE
0%	0/100
10%	10/90
20%	20/80
30%	30/70
40%	40/60
50%	50/50
60%	60/40
70%	70/30
80%	80/20
90%	90/10
100%	100/0

Copyright © 2017, Texas Instruments Incorporated

Accounting for color rendition (but still ignoring image processing) requires knowing both the color intensity (from 0% to 100%) for each constituent primary color (red, green, and/or blue) for the given pixel as well as the color cycle time for each primary color, where “color cycle time” is the total percentage of the frame time that a given primary must be displayed in order to achieve the desired white point.

Use Equation 9 to calculate the landed duty cycle of a given pixel during a given time period

Landed Duty Cycle = (Red_Cycle_% × Red_Scale_Value) + (Green_Cycle_% × Green_Scale_Value) + (Blue_Cycle_% × Blue_Scale_Value)

where

- Red_Cycle_%, represents the percentage of the frame time that red s displayed to achieve the desired white point
- Green_Cycle_% represents the percentage of the frame time that green s displayed to achieve the desired white point
- Blue_Cycle_%, represents the percentage of the frame time that blue is displayed to achieve the desired white point (9)

For example, assume that the red, green and blue color cycle times are 50%, 20%, and 30% respectively (in order to achieve the desired white point), then the Landed Duty Cycle for various combinations of red, green, blue color intensities would be as shown in Table 6 and Table 7.

Table 6. Example Landed Duty Cycle for Full-Color, Color Percentage

CYCLE PERCENTAGE		
RED	**GREEN**	**BLUE**
50%	20%	30%

Table 7. Example Landed Duty Cycle for Full-Color

SCALE VALUE			LANDED DUTY CYCLE
RED	**GREEN**	**BLUE**	
0%	0%	0%	0/100
100%	0%	0%	50/50
0%	100%	0%	20/80
0%	0%	100%	30/70
12%	0%	0%	6/94
0%	35%	0%	7/93
0%	0%	60%	18/82
100%	100%	0%	70/30
0%	100%	100%	50/50
100%	0%	100%	80/20
12%	35%	0%	13/87
0%	35%	60%	25/75
12%	0%	60%	24/76
100%	100%	100%	100/0

Copyright © 2017, Texas Instruments Incorporated

8 Application and Implementation

NOTE

Information in the following applications sections is not part of the TI component specification, and TI does not warrant its accuracy or completeness. TI's customers are responsible for determining suitability of components for their purposes. Customers should validate and test their design implementation to confirm system functionality.

8.1 Application Information

Texas Instruments DLP technology is a micro-electro-mechanical systems (MEMS) technology that modulates light using a digital micromirror device (DMD). The DMD is a spatial light modulator, which reflects incoming light from an illumination source to one of two directions, towards the projection optics or collection optics. The new TRP pixel with a higher tilt angle increases brightness performance and enables smaller system electronics for size constrained applications. Typical applications using the DLP470NE include home theater, digital signage, interactive display, low-latency gaming display, portable smart displays.

The most recent class of chipsets from Texas Instruments is based on a breakthrough micromirror technology, called TRP. With a smaller pixel pitch of 5.4 μm and increased tilt angle of 17 degrees, TRP chipsets enable higher resolution in a smaller form factor and enhanced image processing features while maintaining high optical efficiency. DLP chipsets are a great fit for any system that requires high resolution and high brightness displays.

8.2 Typical Application

The DLP470NE DMD combined with a DLPC4422 digital controller and DLPA100 power management device provides full HD resolution for bright, colorful display applications. A typical display system using the DLP470NE and additional system components is shown in Figure 11.

Copyright © 2017, Texas Instruments Incorporated

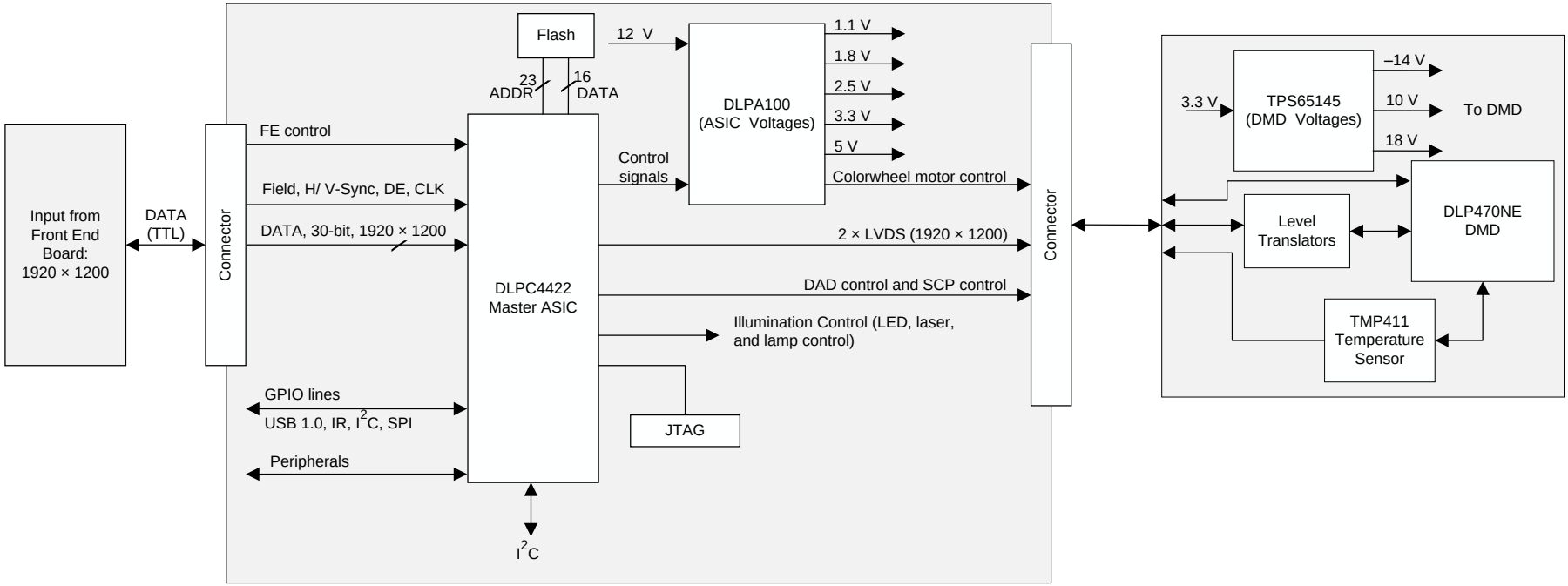

Copyright © 2017, Texas Instruments Incorporated

Figure 11. Typical 1080P Application Diagram

8.2.1 Design Requirements

A DLP470NE projection system is created by using the DMD chipset, including the DLP470NE, DLPC4422, and DLPA100. The DLP470NE is used as the core imaging device in the display system and contains a 0.47-inch array of micromirrors. The DLPC4422 controller is the digital interface between the DMD and the rest of the system, taking digital input from front end receiver and driving the DMD over a high speed interface. The DLPA100 power management device provides voltage regulators for the DMD, controller, and illumination functionality.

Other core components of the display system include an illumination source, an optical engine for the illumination and projection optics, other electrical and mechanical components, and software. The illumination source options include lamp, LED, laser or laser phosphor. The type of illumination used and desired brightness will have a major effect on the overall system design and size.

8.2.2 Detailed Design Procedure

For connecting the DLPC4422 display controller and the DLP470NE DMD, see the reference design schematic. For a complete the DLP system, an optical module or light engine is required that contains the DLP470NE DMD, associated illumination sources, optical elements, and necessary mechanical components.

To ensure reliable operation, the DLP470NE DMD must always be used with the DLPC4422 display controllers and a DLPA100 PMIC driver. Refer to PCB Design Requirements for DLP Standard TRP Digital Micromirror Devices for the DMD board design and manufacturing handling of the DMD sub assemblies.

8.2.3 Application Curves

When LED illumination is utilized, typical LED-current-to-Luminance relationship is shown in Figure 12

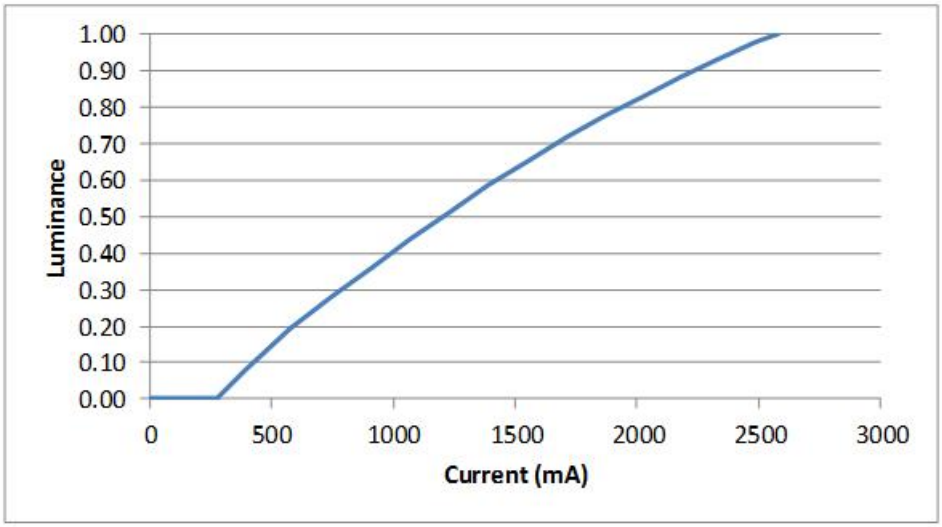

Figure 12. Luminance vs. Current

Copyright © 2017, Texas Instruments Incorporated

9 Power Supply Recommendations

The following power supplies are all required to operate the DMD:

- VSS
- VBIAS
- VCC
- VOFFSET
- VRESET

DMD power-up and power-down sequencing is strictly controlled by the DLP display controller.

CAUTION

For reliable operation of the DMD, the following power supply sequencing requirements must be followed. Failure to adhere to any of the prescribed power-up and power-down requirements may affect device reliability. See Figure 13 DMD Power Supply Sequencing Requirements.

VBIAS, VCC, VOFFSET, and VRESET power supplies must be coordinated during power-up and power-down operations. Failure to meet any of the below requirements will result in a significant reduction in the DMD reliability and lifetime. Common ground VSS must also be connected.

9.1 DMD Power Supply Power-Up Procedure

- During power-up, VCC must always start and settle before VOFFSET plus Delay1 specified in Table 8, VBIAS, and VRESET voltages are applied to the DMD.
- During power-up, it is a strict requirement that the voltage difference between VBIAS and VOFFSET must be within the specified limit shown in *Recommended Operating Conditions*.
- During power-up, there is no requirement for the relative timing of VRESET with respect to VBIAS.
- Power supply slew rates during power-up are flexible, provided that the transient voltage levels follow the requirements specified in *Absolute Maximum Ratings*, in *Recommended Operating Conditions*, and in Figure 13.
- During power-up, LVCMOS input pins must not be driven high until after VCC have settled at operating voltages listed in *Recommended Operating Conditions*.

9.2 DMD Power Supply Power-Down Procedure

- During power-down, VCC must be supplied until after VBIAS, VRESET, and VOFFSET are discharged to within the specified limit of ground. See Table 8.
- During power-down, it is a strict requirement that the voltage difference between VBIAS and VOFFSET must be within the specified limit shown in *Recommended Operating Conditions*.
- During power-down, there is no requirement for the relative timing of VRESET with respect to VBIAS.
- Power supply slew rates during power-down are flexible, provided that the transient voltage levels follow the requirements specified in *Absolute Maximum Ratings*, in *Recommended Operating Conditions*, and in Figure 13.
- During power-down, LVCMOS input pins must be less than specified in *Recommended Operating Conditions*.

Copyright © 2017, Texas Instruments Incorporated

DMD Power Supply Power-Down Procedure (continued)

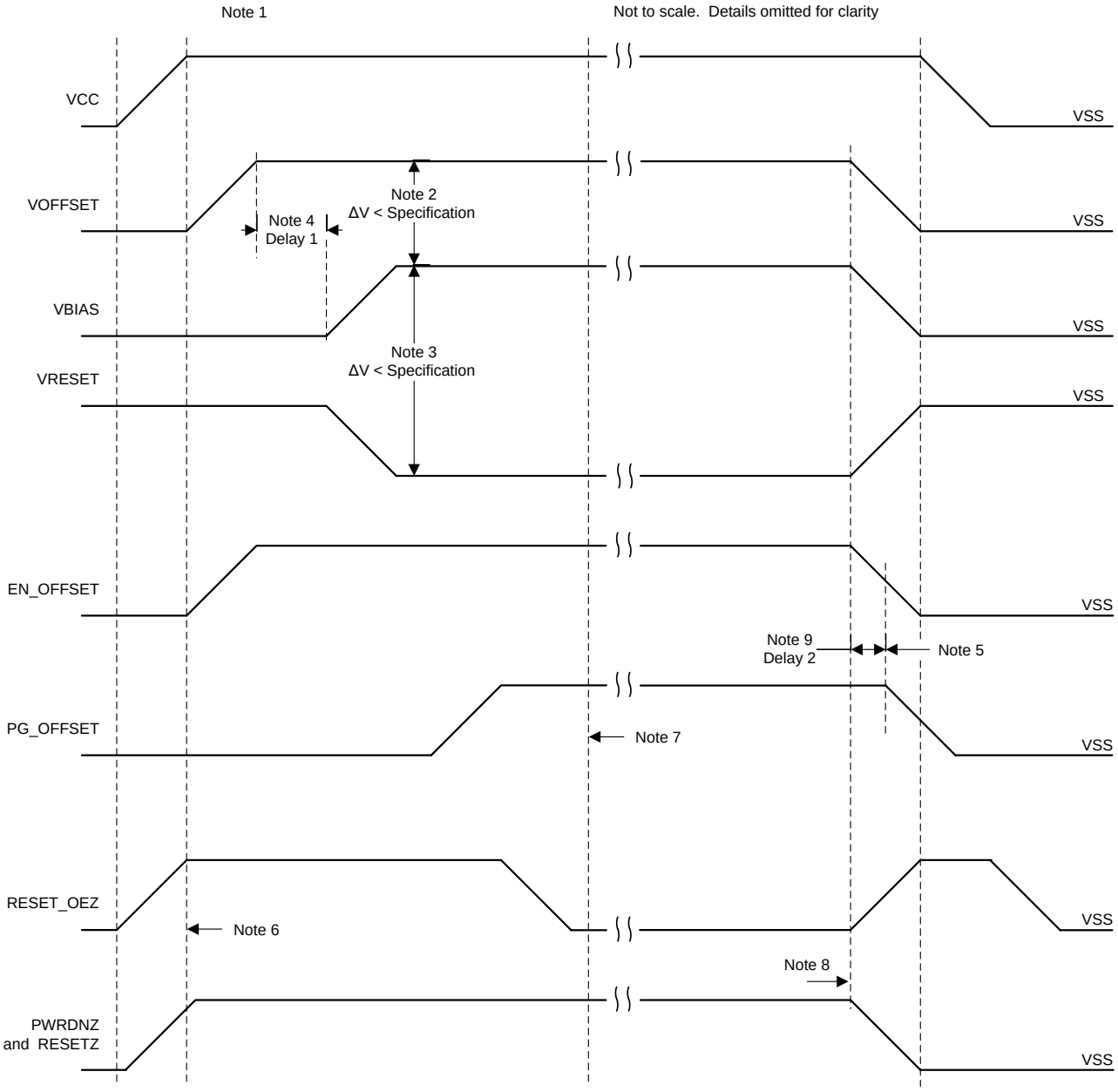

(1) See *Recommended Operating Conditions*, and .

(2) To prevent excess current, the supply voltage difference |VOFFSET – VBIAS| must be less than specified limit in .*Recommended Operating Conditions*

(3) To prevent excess current, the supply difference |VBIAS – VRESET| must be less than specified limit in .*Recommended Operating Conditions*.

(4) VBIAS should power up after VOFFSET has powered up, per the Delay1 specification in Table 8

(5) PG_OFFSET should turn off after EN_OFFSET has turned off, per the Delay2 specification in Table 8.

(6) DLP controller software enables the DMD power supplies to turn on after RESET_OEZ is at logic high.

(7) DLP controller software initiates the global VBIAS command.

(8) After the DMD micromirror park sequence is complete, the DLP controller software initiates a hardware power-down that activates PWRDNZ and disables VBIAS, VRESET and VOFFSET.

(9) Under power-loss conditions where emergency DMD micromirror park procedures are being enacted by the DLP controller hardware, EN_OFFSET may turn off after PG_OFFSET has turned off. The OEZ signal goes high prior to

Copyright © 2017, Texas Instruments Incorporated

DMD Power Supply Power-Down Procedure (continued)

PG_OFFSET turning off to indicate the DMD micromirror has completed the emergency park procedures.

Figure 13. DMD Power Supply Requirements

Table 8. DMD Power-Supply Requirements

PARAMETER	DESCRIPTION	MIN	NOM	MAX	UNIT
Delay1	Delay from VOFFSET settled at recommended operating voltage to VBIAS and VRESET power up	1	2		ms
Delay2	PG_OFFSET hold time after EN_OFFSET goes low	100			ns

Copyright © 2017, Texas Instruments Incorporated

10 Layout

10.1 Layout Guidelines

The DLP470NE DMD is part of a chipset that is controlled by the DLPC4422 display controller in conjunction with the DLPA100 power and motor driver. These guidelines are targeted at designing a PCB board with the DLP470NE DMD. The DLP470NE DMD board is a high-speed multi-layer PCB, with primarily high-speed digital logic utilizing dual edge clock rates up to 400MHz for DMD LVDS signals. The remaining traces are comprised of low speed digital LVTTL signals. TI recommends that mini power planes are used for VOFFSET, VRESET, and VBIAS. Solid planes are required for DMD_P3P3V(3.3V), DMD_P1P8V and Ground. The target impedance for the PCB is 50 Ω ±10% with the LVDS traces being 100 Ω ±10% differential. TI recommends using an 8 layer stack-up as described in Table 9.

10.2 Layout Example

10.2.1 Layers

The layer stack-up and copper weight for each layer is shown in Table 9. Small sub-planes are allowed on signal routing layers to connect components to major sub-planes on top/bottom layers if necessary.

Table 9. Layer Stack-Up

LAYER NO.	LAYER NAME	COPPER WT. (oz.)	COMMENTS
1	Side A - DMD only	1.5	DMD, escapes, low frequency signals, power sub-planes.
2	Ground	1	Solid ground plane (net GND).
3	Signal	0.5	50 Ω and 100 Ω differential signals
4	Ground	1	Solid ground plane (net GND)
5	DMD_P3P3V	1	+3.3-V power plane (net DMD_P3P3V)
6	Signal	0.5	50 Ω and 100 Ω differential signals
7	Ground	1	Solid ground plane (net GND).
8	Side B - All other Components	1.5	Discrete components, low frequency signals, power sub-planes

10.2.2 Impedance Requirements

TI recommends that the board has matched impedance of 50 Ω ±10% for all signals. The exceptions are listed in Table 10.

Table 10. Special Impedance Requirements

Signal Type	Signal Name	Impedance (ohms)
C channel LVDS differential pairs	DDCP(0:15), DDCN(0:15)	100 ±10% differential across each pair
	DCLKC_P, DCLKC_N	
	SCTRL_CP, SCTRL_CN	
D channel LVDS differential pairs	DDDP(0:15), DDDN(0:15)	100 ±10% differential across each pair
	DCLKD_P, DCLKD_N	
	SCTRL_DP, SCTRL_DN	

10.2.3 Trace Width, Spacing

Unless otherwise specified, TI recommends that all signals follow the 0.005”/0.005” design rule. Minimum trace clearance from the ground ring around the PWB has a 0.1” minimum. An analysis of impedance and stack-up requirements determine the actual trace widths and clearances.

Copyright © 2017, Texas Instruments Incorporated

10.2.3.1 Voltage Signals

Table 11. Special Trace Widths, Spacing Requirements

SIGNAL NAME	MINIMUM TRACE WIDTH TO PINS (MIL)	LAYOUT REQUIREMENT
GND	15	Maximize trace width to connecting pin
DMD_P3P3V	15	Maximize trace width to connecting pin
DMD_P1P8V	15	Maximize trace width to connecting pin
VOFFSET	15	Create mini plane from U2 to U3
VRESET	15	Create mini plane from U2 to U3
VBIAS	15	Create mini plane from U2 to U3
All U3 control connections	10	Use 10 mil etch to connect all signals/voltages to DMD pads

Copyright © 2017, Texas Instruments Incorporated

11 Device and Documentation Support

11.1 Device Support

11.1.1 Device Nomenclature

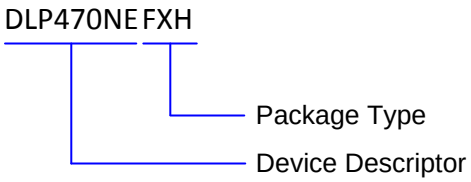

Figure 14. Part Number Description

11.1.2 Device Markings

The device marking includes both human-readable information and a 2-dimensional matrix code. The human-readable information is described in Figure 15. The 2-dimensional matrix code is an alpha-numeric character string that contains the DMD part number, part 1 of serial number, and part 2 of serial number. The first character of the DMD Serial Number (part 1) is the manufacturing year. The second character of the DMD Serial Number (part 1) is the manufacturing month. The last character of the DMD Serial Number (part 2) is the bias voltage bin letter.

Example: *1910-503AB GHXXXXX LLLLLLM

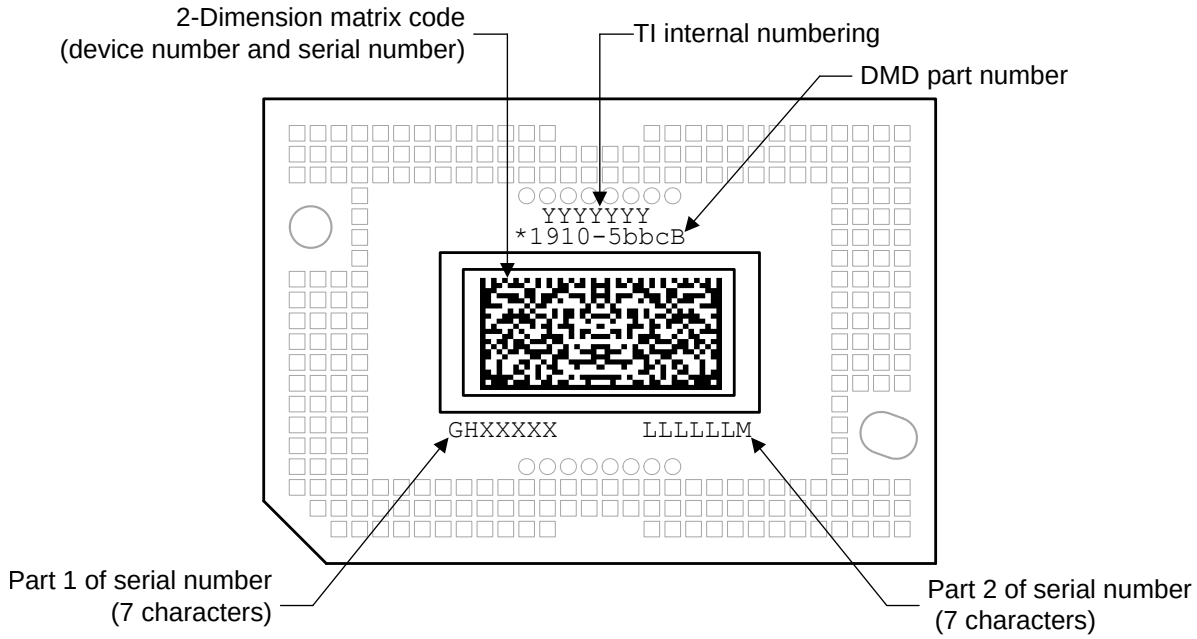

Figure 15. DMD Marking Locations

11.2 Documentation Support

11.2.1 Related Documentation

The following documents contain additional information related to the chipset components used with the DLP470NE.

- DLPC4422 Display Controller Data Sheet
- DLPA100 Power and Motor Driver Data Sheet

Copyright © 2017, Texas Instruments Incorporated

11.3 Receiving Notification of Documentation Updates

To receive notification of documentation updates, navigate to the device product folder on ti.com. In the upper right corner, click on *Alert me* to register and receive a weekly digest of any product information that has changed. For change details, review the revision history included in any revised document.

11.4 Community Resources

The following links connect to TI community resources. Linked contents are provided "AS IS" by the respective contributors. They do not constitute TI specifications and do not necessarily reflect TI's views; see TI's Terms of Use.

TI E2E™ Online Community ***TI's Engineer-to-Engineer (E2E) Community.*** Created to foster collaboration among engineers. At e2e.ti.com, you can ask questions, share knowledge, explore ideas and help solve problems with fellow engineers.

Design Support ***TI's Design Support*** Quickly find helpful E2E forums along with design support tools and contact information for technical support.

11.5 Trademarks

E2E is a trademark of Texas Instruments.
DLP is a registered trademark of Texas Instruments.
All other trademarks are the property of their respective owners.

11.6 Electrostatic Discharge Caution



These devices have limited built-in ESD protection. The leads should be shorted together or the device placed in conductive foam during storage or handling to prevent electrostatic damage to the MOS gates.

11.7 Glossary

SLYZ022 — *TI Glossary*.

This glossary lists and explains terms, acronyms, and definitions.

Copyright © 2017, Texas Instruments Incorporated

12 Mechanical, Packaging, and Orderable Information

The following pages include mechanical, packaging, and orderable information. This information is the most current data available for the designated devices. This data is subject to change without notice and revision of this document. For browser-based versions of this data sheet, refer to the left-hand navigation.

Copyright © 2017, Texas Instruments Incorporated

PACKAGING INFORMATION

Orderable Device	Status (1)	Package Type	Package Drawing	Pins	Package Qty	Eco Plan (2)	Lead/Ball Finish (6)	MSL Peak Temp (3)	Op Temp (°C)	Device Marking (4/5)	Samples
DLP470NEFXH	ACTIVE	CLGA	FXH	257	33	RoHS & Green	Call TI	Level-1-NC-NC			Samples

(1) The marketing status values are defined as follows:
ACTIVE: Product device recommended for new designs.
LIFEBUY: TI has announced that the device will be discontinued, and a lifetime-buy period is in effect.
NRND: Not recommended for new designs. Device is in production to support existing customers, but TI does not recommend using this part in a new design.
PREVIEW: Device has been announced but is not in production. Samples may or may not be available.
OBSOLETE: TI has discontinued the production of the device.

(2) **RoHS:** TI defines "RoHS" to mean semiconductor products that are compliant with the current EU RoHS requirements for all 10 RoHS substances, including the requirement that RoHS substance do not exceed 0.1% by weight in homogeneous materials. Where designed to be soldered at high temperatures, "RoHS" products are suitable for use in specified lead-free processes. TI may reference these types of products as "Pb-Free".
RoHS Exempt: TI defines "RoHS Exempt" to mean products that contain lead but are compliant with EU RoHS pursuant to a specific EU RoHS exemption.
Green: TI defines "Green" to mean the content of Chlorine (Cl) and Bromine (Br) based flame retardants meet JS709B low halogen requirements of <=1000ppm threshold. Antimony trioxide based flame retardants must also meet the <=1000ppm threshold requirement.

(3) MSL, Peak Temp. - The Moisture Sensitivity Level rating according to the JEDEC industry standard classifications, and peak solder temperature.

(4) There may be additional marking, which relates to the logo, the lot trace code information, or the environmental category on the device.

(5) Multiple Device Markings will be inside parentheses. Only one Device Marking contained in parentheses and separated by a "~" will appear on a device. If a line is indented then it is a continuation of the previous line and the two combined represent the entire Device Marking for that device.

(6) Lead/Ball Finish - Orderable Devices may have multiple material finish options. Finish options are separated by a vertical ruled line. Lead/Ball Finish values may wrap to two lines if the finish value exceeds the maximum column width.

Important Information and Disclaimer: The information provided on this page represents TI's knowledge and belief as of the date that it is provided. TI bases its knowledge and belief on information provided by third parties, and makes no representation or warranty as to the accuracy of such information. Efforts are underway to better integrate information from third parties. TI has taken and continues to take reasonable steps to provide representative and accurate information but may not have conducted destructive testing or chemical analysis on incoming materials and chemicals. TI and TI suppliers consider certain information to be proprietary, and thus CAS numbers and other limited information may not be available for release.

In no event shall TI's liability arising out of such information exceed the total purchase price of the TI part(s) at issue in this document sold by TI to Customer on an annual basis.

© COPYRIGHT 2016 TEXAS INSTRUMENTS UN-PUBLISHED, ALL RIGHTS RESERVED.

REVISIONS			
REV	DESCRIPTION	DATE	APPROVED
A	ECO 2159771, INITIAL RELEASE	07/28/2016	F. ARMSTRONG
B	ECO 2163097, CORRECT POM Y-DIRECTION DIMS	12/15/2016	F. ARMSTRONG

NOTES: UNLESS OTHERWISE SPECIFIED:

1. SUBSTRATE EDGE PERPENDICULARITY TOLERANCE APPLIES TO ENTIRE SURFACE
2. DIE PARALLELISM TOLERANCE APPLIES TO DMD ACTIVE ARRAY ONLY
3. ROTATION ANGLE OF DMD ACTIVE ARRAY IS A REFINEMENT OF THE LOCATION TOLERANCE AND HAS A MAXIMUM ALLOWED VALUE OF 0.8 DEGREES
4. SUBSTRATE SYMBOLIZATION PAD, AND PLATING AT BOTTOM OF DATUMS B AND C HOLES TO BE ELECTRICALLY CONNECTED TO VSS PLANE WITHIN THE SUBSTRATE
5. BOUNDARY MIRRORS SURROUNDING THE DMD ACTIVE AREA
6. MAXIMUM ENCAPSULANT PROFILE SHOWN
7. ENCAPSULANT ALLOWED ON THE SURFACE OF THE CERAMIC IN THE AREA SHOWN IN VIEW B (SHEET 2). ENCAPSULANT SHALL NOT EXCEED 0.200 THICKNESS MAXIMUM.
8. SUBSTRATES PLATED WITH Ni/Au SHALL HAVE THE THREE-DIGIT NUMERICAL MARKING IN THE AREA TO THE LEFT OF THE SYMBOLIZATION PAD. SUBSTRATES PLATED WITH Ni/Pd/Au SHALL HAVE THE MARKING IN THE AREA TO THE RIGHT OF THE SYMBOLIZATION PAD.

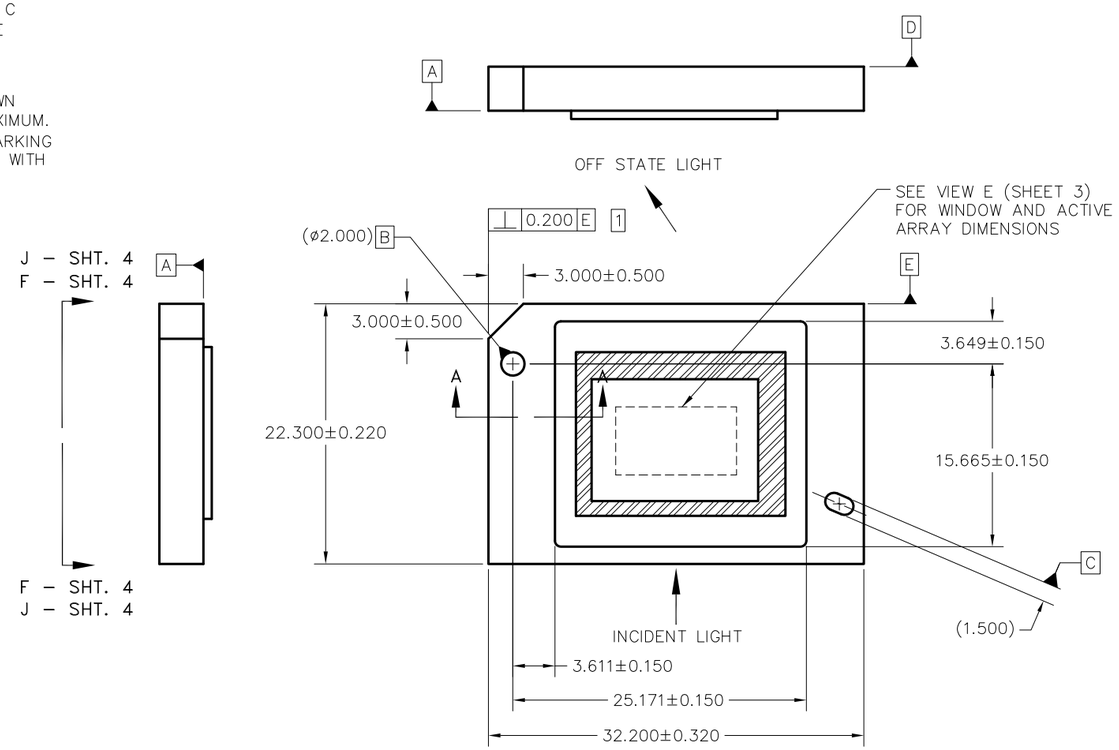

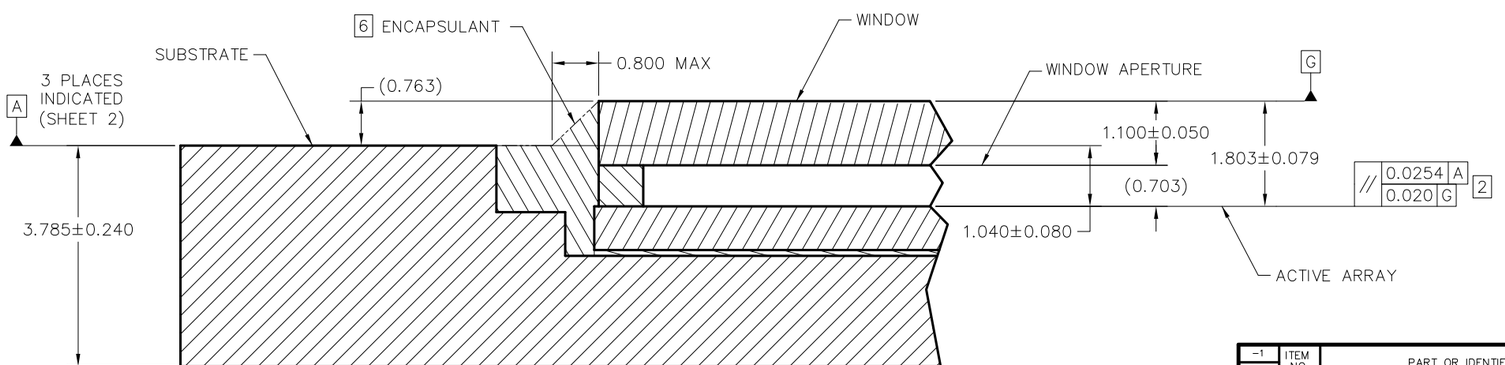

SECTION A–A
SCALE 20/1

PARTS LIST

QTY	ITEM NO	PART OR IDENTIFYING NUMBER	NOMENCLATURE OR DESCRIPTION	NOTES
-1				

UNLESS OTHERWISE SPECIFIED
- DIMENSIONS ARE IN MILLIMETERS
- TOLERANCES: ANGLES ± 1°
  2 PLACE DECIMALS ±0.25
  3 PLACE DECIMALS ±0.50
- REMOVE ALL BURRS AND SHARP EDGES
- INTERPRET DIMENSIONS IN ACCORDANCE WITH ASME Y14.5-1994
- DIMENSIONAL LIMITS APPLY BEFORE PROCESSES
- PARENTHETICAL INFO FOR REF ONLY

DWN F. ARMSTRONG	DATE 07/13/16
ENGR F. ARMSTRONG	07/13/16
QA F. KONRAD	08/03/16
CQE M. DORAK	08/03/16

TEXAS INSTRUMENTS
Dallas, Texas

ICD, MECHANICAL, DMD
.47" 1080p MTRP 2xLVDS HB
SERIES 410 (FXH PACKAGE)

THIRD ANGLE PROJECTION			SIZE	DRAWING NO	REV
	NONE	0314DA	B	2515168	B
	NEXT ASSY	USED ON	SCALE 4/1		SHEET 1 OF 4
	APPLICATION				

ACED1g

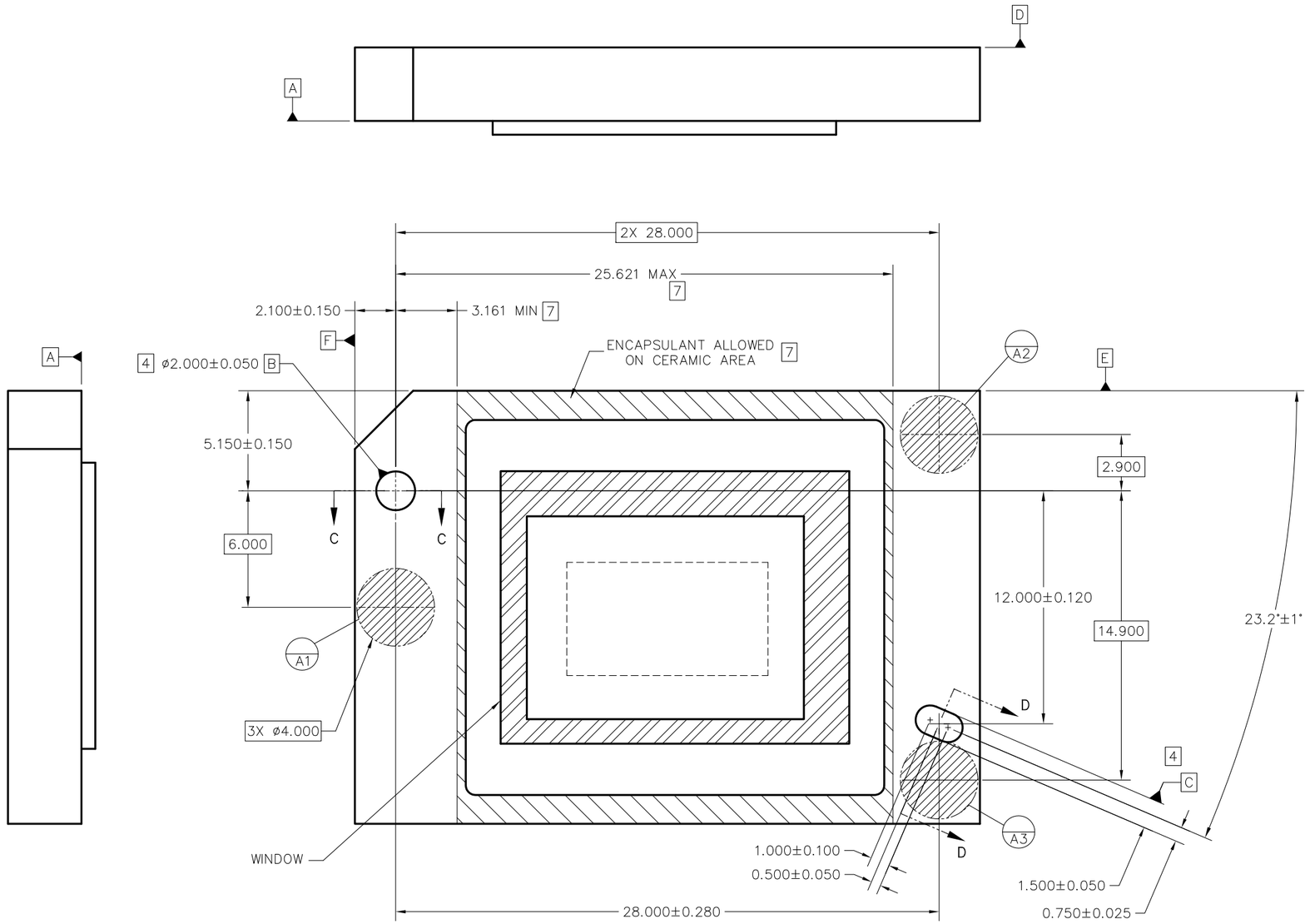

VIEW B
DATUMS AND ENCAPSULANT ALLOWABLE AREA
SCALE 8/1

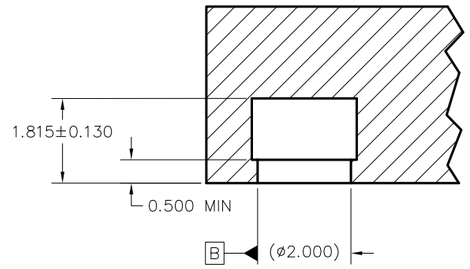

SECTION C–C
DATUM B
SCALE 16/1

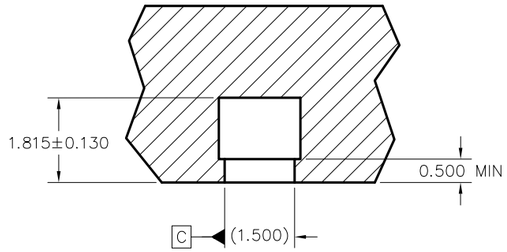

SECTION D–D
DATUM C
SCALE 16/1

Texas Instruments, Dallas, Texas	DWN DATE / ISSUE DATE	SIZE B	DRAWING NO 2515168	REV B
		SCALE 4/1	SHEET 2	

ACED2c

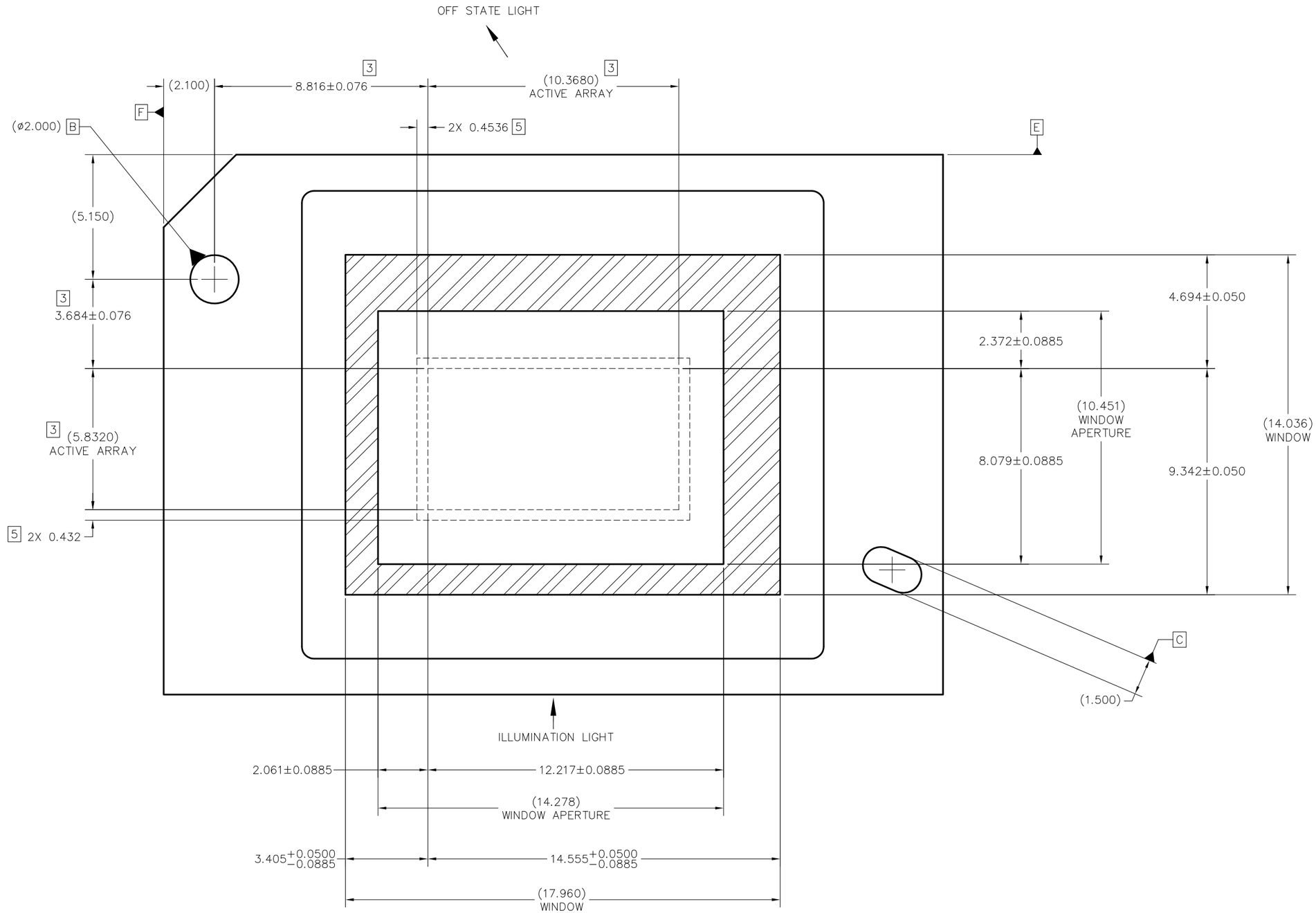

VIEW E (SHEET 1)
DMD WINDOW AND ACTIVE ARRAY
SCALE 12:1

TEXAS INSTRUMENTS Dallas, Texas	DWN DATE	SIZE B	DRAWING NO 2515168	REV B
	ISSUE DATE	SCALE 4/1	SHEET 3	

ACED2c

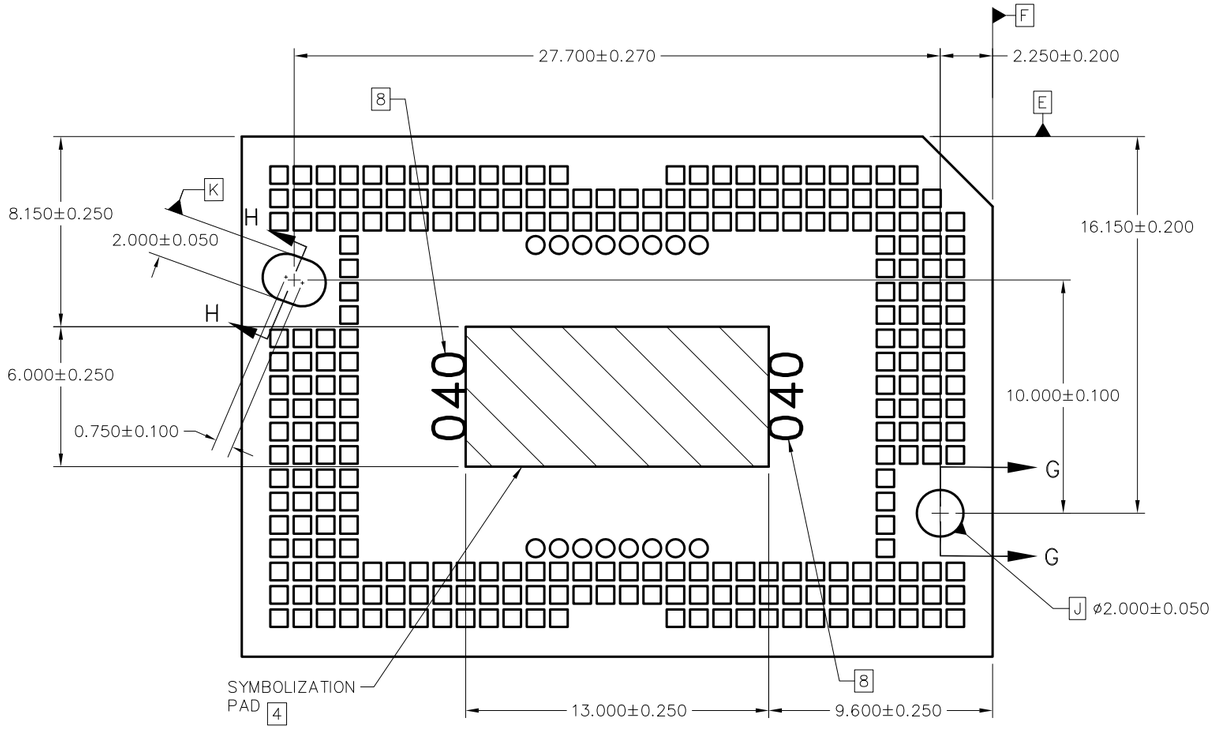

VIEW F–F (SHEET 1)
DATUMS J AND K, SYMBOLIZATION PAD
SCALE 8/1

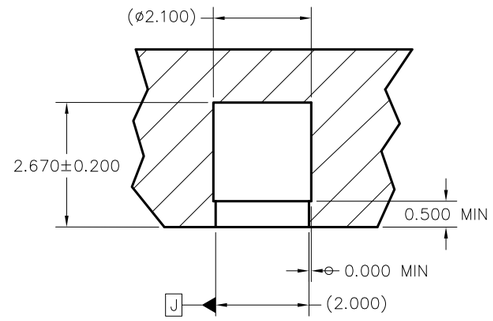

SECTION G–G
DATUM J
SCALE 16/1

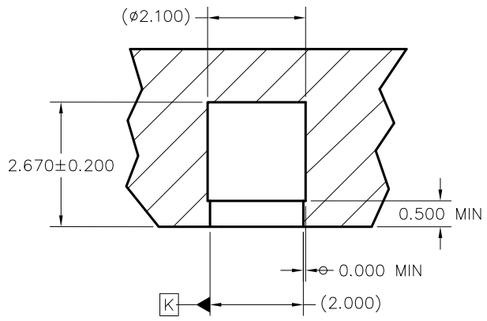

SECTION H–H
DATUM K
SCALE 16/1

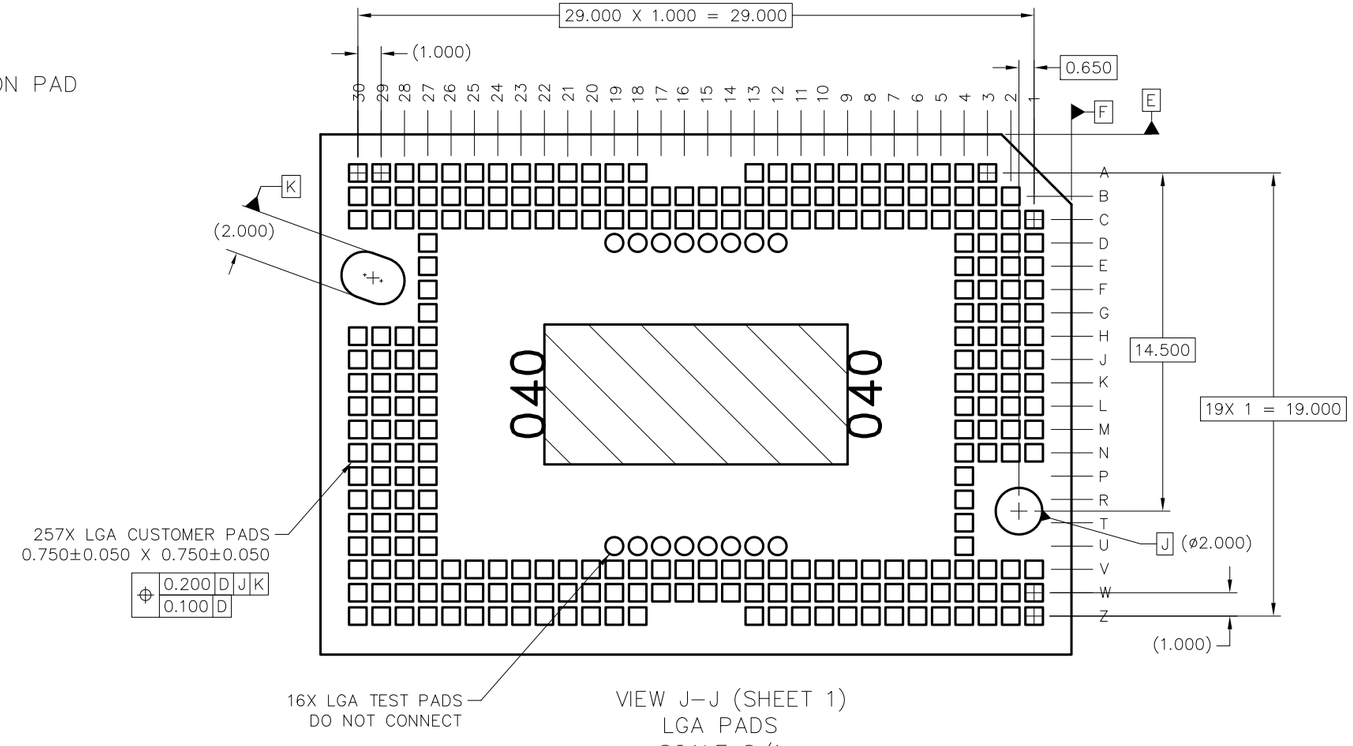

VIEW J–J (SHEET 1)
LGA PADS
SCALE 8/1

Texas Instruments, Dallas, Texas	DWN	DATE	SIZE B	DRAWING NO 2515168	REV B
	ISSUE DATE		SCALE 4/1	SHEET 4	

ACED2c

IMPORTANT NOTICE

Texas Instruments Incorporated (TI) reserves the right to make corrections, enhancements, improvements and other changes to its semiconductor products and services per JESD46, latest issue, and to discontinue any product or service per JESD48, latest issue. Buyers should obtain the latest relevant information before placing orders and should verify that such information is current and complete.

TI's published terms of sale for semiconductor products (http://www.ti.com/sc/docs/stdterms.htm) apply to the sale of packaged integrated circuit products that TI has qualified and released to market. Additional terms may apply to the use or sale of other types of TI products and services.

Reproduction of significant portions of TI information in TI data sheets is permissible only if reproduction is without alteration and is accompanied by all associated warranties, conditions, limitations, and notices. TI is not responsible or liable for such reproduced documentation. Information of third parties may be subject to additional restrictions. Resale of TI products or services with statements different from or beyond the parameters stated by TI for that product or service voids all express and any implied warranties for the associated TI product or service and is an unfair and deceptive business practice. TI is not responsible or liable for any such statements.

Buyers and others who are developing systems that incorporate TI products (collectively, "Designers") understand and agree that Designers remain responsible for using their independent analysis, evaluation and judgment in designing their applications and that Designers have full and exclusive responsibility to assure the safety of Designers' applications and compliance of their applications (and of all TI products used in or for Designers' applications) with all applicable regulations, laws and other applicable requirements. Designer represents that, with respect to their applications, Designer has all the necessary expertise to create and implement safeguards that (1) anticipate dangerous consequences of failures, (2) monitor failures and their consequences, and (3) lessen the likelihood of failures that might cause harm and take appropriate actions. Designer agrees that prior to using or distributing any applications that include TI products, Designer will thoroughly test such applications and the functionality of such TI products as used in such applications.

TI's provision of technical, application or other design advice, quality characterization, reliability data or other services or information, including, but not limited to, reference designs and materials relating to evaluation modules, (collectively, "TI Resources") are intended to assist designers who are developing applications that incorporate TI products; by downloading, accessing or using TI Resources in any way, Designer (individually or, if Designer is acting on behalf of a company, Designer's company) agrees to use any particular TI Resource solely for this purpose and subject to the terms of this Notice.

TI's provision of TI Resources does not expand or otherwise alter TI's applicable published warranties or warranty disclaimers for TI products, and no additional obligations or liabilities arise from TI providing such TI Resources. TI reserves the right to make corrections, enhancements, improvements and other changes to its TI Resources. TI has not conducted any testing other than that specifically described in the published documentation for a particular TI Resource.

Designer is authorized to use, copy and modify any individual TI Resource only in connection with the development of applications that include the TI product(s) identified in such TI Resource. NO OTHER LICENSE, EXPRESS OR IMPLIED, BY ESTOPPEL OR OTHERWISE TO ANY OTHER TI INTELLECTUAL PROPERTY RIGHT, AND NO LICENSE TO ANY TECHNOLOGY OR INTELLECTUAL PROPERTY RIGHT OF TI OR ANY THIRD PARTY IS GRANTED HEREIN, including but not limited to any patent right, copyright, mask work right, or other intellectual property right relating to any combination, machine, or process in which TI products or services are used. Information regarding or referencing third-party products or services does not constitute a license to use such products or services, or a warranty or endorsement thereof. Use of TI Resources may require a license from a third party under the patents or other intellectual property of the third party, or a license from TI under the patents or other intellectual property of TI.

TI RESOURCES ARE PROVIDED "AS IS" AND WITH ALL FAULTS. TI DISCLAIMS ALL OTHER WARRANTIES OR REPRESENTATIONS, EXPRESS OR IMPLIED, REGARDING RESOURCES OR USE THEREOF, INCLUDING BUT NOT LIMITED TO ACCURACY OR COMPLETENESS, TITLE, ANY EPIDEMIC FAILURE WARRANTY AND ANY IMPLIED WARRANTIES OF MERCHANTABILITY, FITNESS FOR A PARTICULAR PURPOSE, AND NON-INFRINGEMENT OF ANY THIRD PARTY INTELLECTUAL PROPERTY RIGHTS. TI SHALL NOT BE LIABLE FOR AND SHALL NOT DEFEND OR INDEMNIFY DESIGNER AGAINST ANY CLAIM, INCLUDING BUT NOT LIMITED TO ANY INFRINGEMENT CLAIM THAT RELATES TO OR IS BASED ON ANY COMBINATION OF PRODUCTS EVEN IF DESCRIBED IN TI RESOURCES OR OTHERWISE. IN NO EVENT SHALL TI BE LIABLE FOR ANY ACTUAL, DIRECT, SPECIAL, COLLATERAL, INDIRECT, PUNITIVE, INCIDENTAL, CONSEQUENTIAL OR EXEMPLARY DAMAGES IN CONNECTION WITH OR ARISING OUT OF TI RESOURCES OR USE THEREOF, AND REGARDLESS OF WHETHER TI HAS BEEN ADVISED OF THE POSSIBILITY OF SUCH DAMAGES.

Unless TI has explicitly designated an individual product as meeting the requirements of a particular industry standard (e.g., ISO/TS 16949 and ISO 26262), TI is not responsible for any failure to meet such industry standard requirements.

Where TI specifically promotes products as facilitating functional safety or as compliant with industry functional safety standards, such products are intended to help enable customers to design and create their own applications that meet applicable functional safety standards and requirements. Using products in an application does not by itself establish any safety features in the application. Designers must ensure compliance with safety-related requirements and standards applicable to their applications. Designer may not use any TI products in life-critical medical equipment unless authorized officers of the parties have executed a special contract specifically governing such use. Life-critical medical equipment is medical equipment where failure of such equipment would cause serious bodily injury or death (e.g., life support, pacemakers, defibrillators, heart pumps, neurostimulators, and implantables). Such equipment includes, without limitation, all medical devices identified by the U.S. Food and Drug Administration as Class III devices and equivalent classifications outside the U.S.

TI may expressly designate certain products as completing a particular qualification (e.g., Q100, Military Grade, or Enhanced Product). Designers agree that it has the necessary expertise to select the product with the appropriate qualification designation for their applications and that proper product selection is at Designers' own risk. Designers are solely responsible for compliance with all legal and regulatory requirements in connection with such selection.

Designer will fully indemnify TI and its representatives against any damages, costs, losses, and/or liabilities arising out of Designer's non-compliance with the terms and provisions of this Notice.

Mailing Address: Texas Instruments, Post Office Box 655303, Dallas, Texas 75265
Copyright © 2018, Texas Instruments Incorporated