DLP4500 (0.45 WXGA DMD)

1 Features

- 0.45-Inch Diagonal Micromirror Array
  - 912 × 1140 Resolution Array (>1 Million Micromirrors)
  - Diamond Array Orientation Supports Side Illumination for Simplified, Efficient Optics Designs
  - Capable of WXGA Resolution Display
  - 7.6-µm Micromirror Pitch
  - ±12° Tilt Angle
  - 5-µs Micromirror Crossover Time
- Highly-Efficient Steering of Visible Light
  - Window Transmission Efficiency 96% Nominal (420 to 700 nm, Single Pass Through Two Window Surfaces)
  - Polarization Independent Aluminum Micromirrors
  - Array Fill Factor 92% Nominal
- Dedicated DLPC350 Controller for Reliable Operation
  - Binary Pattern Rates up to 4 kHz
  - Pattern Sequence Mode for Control Over Each Micromirror in Array
- Integrated Micromirror Driver Circuitry
- 9.10-mm × 20.7-mm Package Footprint for Portable Instruments
  - FQE Package With Simple Connector Interface
  - FQD Package With Enhanced Thermal Interface

Simplified Schematic

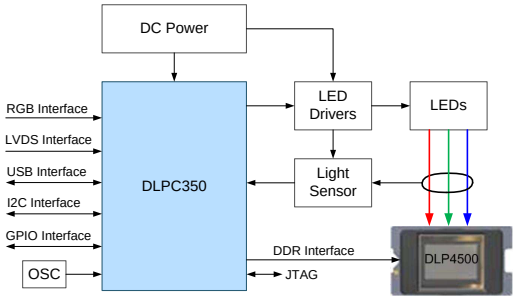

2 Applications

- Machine Vision
  - 3-D Depth Measurement
  - Robotic Guidance
  - Inline Surface Inspection
  - Pick and Place
  - 3-D Capture
  - Defect Rejection
- Medical Instruments
  - 3-D Dental Scanners
  - Vascular Imaging
- 3-D Biometrics
  - Fingerprint Identification
  - Facial Recognition
- Virtual Gauges
- Augmented Reality
- Interactive Display
- Microscopes

3 Description

The DLP4500 digital micromirror device (DMD) acts as a spatial light modulator (SLM) to steer visible light and create patterns with speed, precision, and efficiency. Featuring high resolution and high brightness in a compact form factor, the DLP4500 DMD is well-suited for very accurate, portable 3D machine vision and display solutions used in industrial, medical, and security applications.

Device Information (1)

PART NUMBER	PACKAGE	THERMAL INTERFACE AREA
DLP4500	LCCC (80) (2)	None
	LCCC (98) (3)	7 mm x 7 mm

(1) For all available packages, see the orderable addendum at the end of the data sheet.

(2) FQE package (Series-241) drawing. See DLP® Series-241 DMD and System Mounting Concepts for more information.

(3) FQD package (Series-310) drawing. See DLP® Series-310 DMD and System Mounting Concepts for more information.

An IMPORTANT NOTICE at the end of this data sheet addresses availability, warranty, changes, use in safety-critical applications, intellectual property matters and other important disclaimers. PRODUCTION DATA.

Table of Contents

1 Features ... 1
2 Applications ... 1
3 Description ... 1
4 Revision History ... 2
5 Pin Configuration and Functions ... 4
6 Specifications ... 12
6.1 Absolute Maximum Ratings ... 12
6.2 Storage Conditions ... 12
6.3 ESD Ratings ... 12
6.4 Recommended Operating Conditions ... 13
6.5 Thermal Information ... 15
6.6 Electrical Characteristics ... 15
6.7 Timing Requirements ... 16
6.8 System Mounting Interface Loads ... 18
6.9 Micromirror Array Physical Characteristics ... 20
6.10 Micromirror Array Optical Characteristics ... 21
6.11 Typical Characteristics ... 22
7 Detailed Description ... 23
7.1 Overview ... 23
7.2 Functional Block Diagram ... 23
7.3 Feature Description ... 24
7.4 Device Functional Modes ... 26
7.5 Micromirror Array Temperature Calculation ... 26
7.6 Micromirror Landed-on/Landed-Off Duty Cycle ... 29
8 Application and Implementation ... 31
8.1 Application Information ... 31
8.2 Typical Application ... 31
9 Power Supply Recommendations ... 36
9.1 Power Supply Sequencing Requirements ... 36
9.2 DMD Power Supply Power-Up Procedure ... 36
9.3 DMD Power Supply Power-Down Procedure ... 36
10 Layout ... 38
10.1 Layout Guidelines ... 38
10.2 Layout Example ... 43
11 Device and Documentation Support ... 48
11.1 Device Support ... 48
11.2 Documentation Support ... 49
11.3 Community Resources ... 49
11.4 Trademarks ... 49
11.5 Electrostatic Discharge Caution ... 49
11.6 Glossary ... 50
12 Mechanical, Packaging, and Orderable Information ... 50

4 Revision History

NOTE: Page numbers for previous revisions may differ from page numbers in the current version.

Changes from Revision B (January 2016) to Revision C — **Page**

- Added package type (Series-241) and reference link ... 1
- Added package type (Series-310) and reference link ... 1
- Added reference to Recommended Operating Conditions in tablenote 1 of Absolute Maximum Ratings ... 12
- Changed DMD temperature - operational, long-term maximum to "40 to 70" ... 13
- Changed DMD temperature - operational, short term maximum to 70 ... 13
- A *Temperature Calculation* equation was incorrect. Removed extra Q_{ELEC} from Equation 4 ... 29
- Changed units to mil in *DLPC350 Package Skew and Routing Trace Length for the DMD Interface* table ... 42

Changes from Revision A (May 2013) to Revision B — **Page**

- Added *ESD Ratings* table, *Storage Conditions* table, *Feature Description* section, *Device Functional Modes*, *Application and Implementation* section, *Power Supply Recommendations* section, *Layout* section, *Device and Documentation Support* section, and *Mechanical, Packaging, and Orderable Information* section ... 1
- Updated images with a simplified diagram. ... 1
- Assigned FQE Test Pads as Unused pins. ... 7
- Assigned FQD Test Pads as unused pins ... 11
- Absolute Maximum Ratings specifications updated ... 12
- Recommended Operating Conditions specifications updated ... 13
- Added Temperature Derating Curve ... 14
- Timing Requirements specifications updated ... 16
- System Mounting Interface Loads moved to Specifications ... 18
- Micromirror Array Physical Characteristics moved to Specifications ... 20
- Fixed broken link to *Related Documentation* in *Micromirror Array Optical Characteristics* ... 21

Copyright © 2013–2018, Texas Instruments Incorporated

- Optical Characteristics moved to Specifications 21
- Added DMD Window Transmittance curve 22
- Functional Block Diagram updated 23
- Operating Modes and Pattern Data Rates table added 26
- Micromirror Array Temperature Calculation reformatted 28
- Micromirror Landed-On/Landed-Off Duty Cycle section added 29
- Application NOTE added to Application and Implementation 31
- Typical Application description and schematic updated 31
- Package Specific Information table updated. 48
- Removed link to the chipset datasheet in Related Documentation section 49

Changes from Original (April 2013) to Revision A **Page**

- Changed the device From: Preview To: Production 1

Copyright © 2013–2018, Texas Instruments Incorporated

5 Pin Configuration and Functions

Package Connector for Signal Names - FQE Package
LCCC (80)
Bottom View

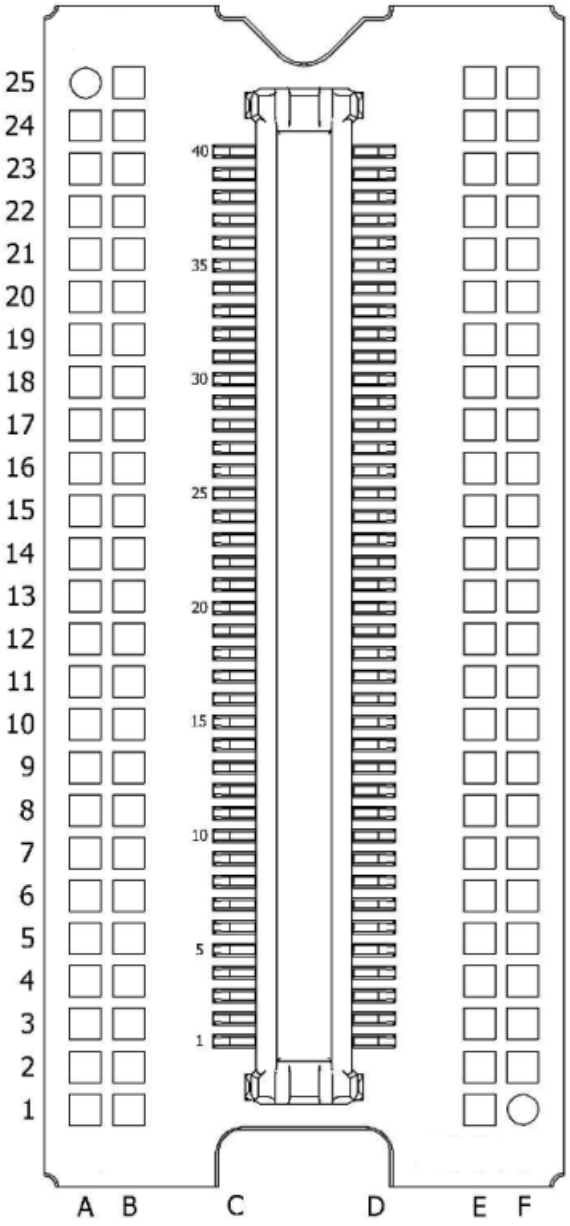

Copyright © 2013–2018, Texas Instruments Incorporated

Connector Pins for FQE

PIN		TYPE	SIGNAL	DATA RATE (1)	INTERNAL TERMINATION	DESCRIPTION	TRACE (mm) (2)
NAME	NO.						
DATA INPUTS							
DATA(0)	C12	Input	LVCMOS	DDR	none	Input data bus, bit 0, LSB	8.11
DATA(1)	C10	Input	LVCMOS	DDR	none	Input data bus, bit 1	7.82
DATA(2)	C9	Input	LVCMOS	DDR	none	Input data bus, bit 2	7.88
DATA(3)	C7	Input	LVCMOS	DDR	none	Input data bus, bit 3	7.84
DATA(4)	C4	Input	LVCMOS	DDR	none	Input data bus, bit 4	8.10
DATA(5)	C6	Input	LVCMOS	DDR	none	Input data bus, bit 5	7.89
DATA(6)	C3	Input	LVCMOS	DDR	none	Input data bus, bit 6	7.87
DATA(7)	C13	Input	LVCMOS	DDR	none	Input data bus, bit 7	7.84
DATA(8)	C15	Input	LVCMOS	DDR	none	Input data bus, bit 8	8.13
DATA(9)	C16	Input	LVCMOS	DDR	none	Input data bus, bit 9	8.00
DATA(10)	C18	Input	LVCMOS	DDR	none	Input data bus, bit 10	8.12
DATA(11)	C19	Input	LVCMOS	DDR	none	Input data bus, bit 11	8.08
DATA(12)	C21	Input	LVCMOS	DDR	none	Input data bus, bit 12	9.27
DATA(13)	C22	Input	LVCMOS	DDR	none	Input data bus, bit 13	9.47
DATA(14)	D22	Input	LVCMOS	DDR	none	Input data bus, bit 14	9.46
DATA(15)	D21	Input	LVCMOS	DDR	none	Input data bus, bit 15	8.73
DATA(16)	D19	Input	LVCMOS	DDR	none	Input data bus, bit 16	8.10
DATA(17)	D4	Input	LVCMOS	DDR	none	Input data bus, bit 17	8.02
DATA(18)	D9	Input	LVCMOS	DDR	none	Input data bus, bit 18	8.07
DATA(19)	D10	Input	LVCMOS	DDR	none	Input data bus, bit 19	7.91
DATA(20)	D6	Input	LVCMOS	DDR	none	Input data bus, bit 20	8.52
DATA(21)	D16	Input	LVCMOS	DDR	none	Input data bus, bit 21	9.10
DATA(22)	D7	Input	LVCMOS	DDR	none	Input data bus, bit 22	8.00
DATA(23)	D15	Input	LVCMOS	DDR	none	Input data bus, bit 23, MSB	8.61
DCLK	D13	Input	LVCMOS	DDR	none	Input data bus clock	8.63
DATA CONTROL INPUTS							
$\overline{\text{LOADB}}$	D12	Input	LVCMOS	DDR	none	Parallel-data load enable	8.65
TRC	D3	Input	LVCMOS	DDR	none	Input-data toggle-rate control	4.67
SCTRL	D18	Input	LVCMOS	DDR	none	Serial control bus	9.40
SAC_BUS	D33	Input	LVCMOS	—	none	Stepped address-control serial-bus data	6.56
SAC_CLK	D29	Input	LVCMOS	—	none	Stepped address-control serial bus clock	8.07
MIRROR RESET CONTROL INPUTS							
DRC_BUS	C29	Input	LVCMOS	—	none	DMD reset-control serial bus	8.24
$\overline{\text{DRC_OE}}$	C33	Input	LVCMOS	—	none	Active-low output enable signal for internal DMD reset driver circuitry	4.43
DRC_STROBE	C36	Input	LVCMOS	—	none	Strobe signal for DMD reset control inputs	9.20

(1) (a) DDR = Double data rate
(b) SDR = Single data rate
(c) Refer to *Timing Requirements* for specifications and relationships.
(2) Net trace lengths inside the package:
(a) Relative dielectric constant for the FQE package is 9.8.
(b) Propagation speed = 11.8 / $\sqrt{(9.8)}$ = 3.769 inches/ns.
(c) Propagation delay = 0.265 ns/inch = 265 ps/inch = 10.43 ps/mm.

Copyright © 2013–2018, Texas Instruments Incorporated

Connector Pins for FQE (continued)

PIN		TYPE	SIGNAL	DATA RATE (1)	INTERNAL TERMINATION	DESCRIPTION	TRACE (mm) (2)
NAME	NO.						
POWER INPUTS (3)							
VBIAS	C31	Power			none	Mirror-reset bias voltage	
VBIAS	C32	Power					
VOFFSET	D25	Power			none	Mirror-reset offset voltage	
VOFFSET	D26	Power					
VRESET	D31	Power			none	Mirror-reset voltage	
VRESET	D32	Power					
VREF	C25	Power			none	Power supply for low-voltage CMOS double-data-rate (DDR) interface	
VREF	C26	Power					
VCC	C1	Power			none	Power supply for LVCMOS logic	
VCC	C2	Power					
VCC	C34	Power					
VCC	C35	Power					
VCC	C37	Power					
VCC	C38	Power					
VCC	C39	Power					
VCC	C40	Power					
VCC	D1	Power					
VCC	D2	Power					
VCC	D34	Power					
VCC	D35	Power					
VCC	D37	Power					
VCC	D38	Power					
VCC	D39	Power					
VCC	D40	Power					

(3) The following power supplies are all required to operate the DMD: VSS, VCC, VOFFSET, VBIAS, VRESET.

Copyright © 2013–2018, Texas Instruments Incorporated

Connector Pins for FQE (continued)

PIN		TYPE	SIGNAL	DATA RATE (1)	INTERNAL TERMINATION	DESCRIPTION	TRACE (mm) (2)
NAME	NO.						
VSS	C5	Power			none	Ground – Common return for all power inputs	
VSS	C8	Power					
VSS	C11	Power					
VSS	C14	Power					
VSS	C17	Power					
VSS	C20	Power					
VSS	C23	Power					
VSS	C24	Power					
VSS	C27	Power					
VSS	C28	Power					
VSS	C30	Power					
VSS	D5	Power					
VSS	D8	Power					
VSS	D11	Power					
VSS	D14	Power					
VSS	D17	Power					
VSS	D20	Power					
VSS	D23	Power					
VSS	D24	Power					
VSS	D27	Power					
VSS	D28	Power					
VSS	D30	Power					

Pin Configuration and Functions – Test Pads for FQE Package

NAME	PIN	SIGNAL	DESCRIPTION
UNUSED	A1 thru A25	Test pads	Do not connect
	B1 thru B25		
	D36		
	E1 thru E25		
	F1 thru F25		

Copyright © 2013–2018, Texas Instruments Incorporated

Package Connector for Signal Names - FQD Package
LCCC (98)
Bottom View

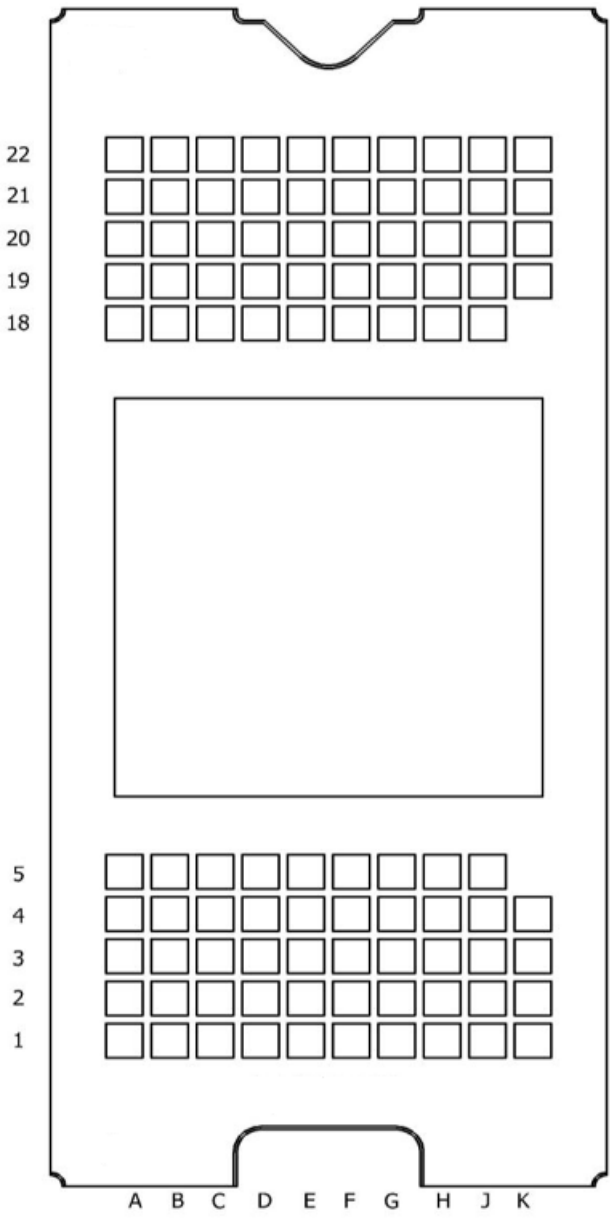

Copyright © 2013–2018, Texas Instruments Incorporated

Connector Pins for FQD

PIN		TYPE	SIGNAL	DATA RATE (1)	INTERNAL TERMINATION	DESCRIPTION	PACKAGE NET LENGTH (mm) (2)
NAME	NO.						
DATA INPUTS							
DATA(0)	A1	Input	LVCMOS	DDR	none	Input data bus, bit 0, LSB	3.77
DATA(1)	A2	Input	LVCMOS	DDR	none	Input data bus, bit 1	3.77
DATA(2)	A3	Input	LVCMOS	DDR	none	Input data bus, bit 2	3.73
DATA(3)	A4	Input	LVCMOS	DDR	none	Input data bus, bit 3	3.74
DATA(4)	B1	Input	LVCMOS	DDR	none	Input data bus, bit 4	3.79
DATA(5)	B3	Input	LVCMOS	DDR	none	Input data bus, bit 5	3.75
DATA(6)	C1	Input	LVCMOS	DDR	none	Input data bus, bit 6	3.72
DATA(7)	C3	Input	LVCMOS	DDR	none	Input data bus, bit 7	3.75
DATA(8)	C4	Input	LVCMOS	DDR	none	Input data bus, bit 8	3.78
DATA(9)	D1	Input	LVCMOS	DDR	none	Input data bus, bit 9	3.75
DATA(10)	D4	Input	LVCMOS	DDR	none	Input data bus, bit 10	3.77
DATA(11)	E1	Input	LVCMOS	DDR	none	Input data bus, bit 11	3.75
DATA(12)	E4	Input	LVCMOS	DDR	none	Input data bus, bit 12	3.71
DATA(13)	F1	Input	LVCMOS	DDR	none	Input data bus, bit 13	3.76
DATA(14)	F3	Input	LVCMOS	DDR	none	Input data bus, bit 14	3.73
DATA(15)	G1	Input	LVCMOS	DDR	none	Input data bus, bit 15	3.72
DATA(16)	G2	Input	LVCMOS	DDR	none	Input data bus, bit 16	3.77
DATA(17)	G4	Input	LVCMOS	DDR	none	Input data bus, bit 17	3.73
DATA(18)	H1	Input	LVCMOS	DDR	none	Input data bus, bit 18	3.74
DATA(19)	H2	Input	LVCMOS	DDR	none	Input data bus, bit 19	3.76
DATA(20)	H4	Input	LVCMOS	DDR	none	Input data bus, bit 20	3.70
DATA(21)	J1	Input	LVCMOS	DDR	none	Input data bus, bit 21	3.77
DATA(22)	J3	Input	LVCMOS	DDR	none	Input data bus, bit 22	3.76
DATA(23)	J4	Input	LVCMOS	DDR	none	Input data bus, bit 23, MSB	3.77
DCLK	K1	Input	LVCMOS	DDR	none	Input data bus clock	3.74
DATA CONTROL INPUTS							
$\overline{\text{LOADB}}$	K2	Input	LVCMOS	DDR	none	Parallel-data load enable	3.74
TRC	K4	Input	LVCMOS	DDR	none	Input-data toggle rate control	4.70
SCTRL	K3	Input	LVCMOS	DDR	none	Serial-control bus	3.75
SAC_BUS	C20	Input	LVCMOS	—	none	Stepped address-control serial-bus data	3.77
SAC_CLK	C22	Input	LVCMOS	—	none	Stepped address-control serial-bus clock	1.49
MIRROR RESET CONTROL INPUTS							
DRC_BUS	B21	Input	LVCMOS	—	none	DMD reset-control serial bus	3.73
$\overline{\text{DRC_OE}}$	A20	Input	LVCMOS	—	none	Active-low output enable signal for internal DMD reset driver circuitry	3.74
DRC_STROBE	A22	Input	LVCMOS	—	none	Strobe signal for DMD reset-control inputs	3.73

(1) (a) DDR = Double data rate
(b) SDR = Single data rate
(c) Refer to *Timing Requirements* for specifications and relationships.

(2) Net trace lengths inside the package:
(a) Relative dielectric constant for the FQD ceramic package is 9.8.
(b) Propagation speed = 11.8 / sqrt(9.8) = 3.769 inches/ns.
(c) Propagation delay = 0.265 ns/inch = 265 ps/inch = 10.43 ps/mm.

Copyright © 2013–2018, Texas Instruments Incorporated

Connector Pins for FQD (continued)

PIN		TYPE	SIGNAL	DATA RATE (1)	INTERNAL TERMINATION	DESCRIPTION	PACKAGE NET LENGTH (mm) (2)
NAME	NO.						
POWER INPUTS (3)							
VBIAS	C19	Power				Mirror-reset bias voltage	
VBIAS	D19	Power					
VOFFSET	A19	Power				Mirror-reset offset voltage	
VOFFSET	K19	Power					
VRESET	E19	Power				Mirror-reset voltage	
VRESET	F19	Power					
VREF	B19	Power				Power supply for LVCMOS double-data-rate (DDR) interface	
VREF	J19	Power					
VCC	B22	Power				Power supply for LVCMOS logic	
VCC	C2	Power					
VCC	D21	Power					
VCC	E2	Power					
VCC	E20	Power					
VCC	E22	Power					
VCC	F21	Power					
VCC	G3	Power					
VCC	G19	Power					
VCC	G20	Power					
VCC	G22	Power					
VCC	H19	Power					
VCC	H21	Power					
VCC	J20	Power					
VCC	J22	Power					
VCC	K21	Power					

(3) The following power supplies are all required to operate the DMD: VSS, VCC, VOFFSET, VBIAS, VRESET.

Copyright © 2013–2018, Texas Instruments Incorporated

Connector Pins for FQD (continued)

PIN		TYPE	SIGNAL	DATA RATE (1)	INTERNAL TERMINATION	DESCRIPTION	PACKAGE NET LENGTH (mm) (2)
NAME	NO.						
VSS	A21	Power				Ground – Common return for all power inputs	
VSS	B2	Power					
VSS	B4	Power					
VSS	B20	Power					
VSS	C21	Power					
VSS	D2	Power					
VSS	D3	Power					
VSS	D20	Power					
VSS	D22	Power					
VSS	E3	Power					
VSS	E21	Power					
VSS	F2	Power					
VSS	F4	Power					
VSS	F20	Power					
VSS	F22	Power					
VSS	G21	Power					
VSS	H3	Power					
VSS	H20	Power					
VSS	H22	Power					
VSS	J2	Power					
VSS	J21	Power					
VSS	K20	Power					

Pin Configuration and Functions – Test Pads for FQD Package

NAME	PIN	SIGNAL	DESCRIPTION
UNUSED	A5, A18, B5, B18, C5, C18, D5, D18, E5, E18, F5, F18, G5, G18, H5, H18, J5, J18, K22	Test pads	Do not connect

Copyright © 2013–2018, Texas Instruments Incorporated

6 Specifications

6.1 Absolute Maximum Ratings

over operating free-air temperature range (unless otherwise noted) (1)

			MIN	MAX	UNIT
SUPPLY VOLTAGES (2)					
VCC	Supply voltage for LVCMOS core logic		–0.5	4	V
VREF	Supply voltage for LVCMOS DDR interface		–0.5	4	V
VOFFSET	Supply voltage for high voltage CMOS and micromirror electrode		–0.5	8.75	V
VBIAS (3)	Supply voltage for micromirror electrode		–0.5	17	V
VRESET	Supply voltage for micromirror electrode		–11	0.5	V
|VBIAS - VOFFSET| (3)	Supply voltage delta (absolute value)			8.75	V
INPUT VOLTAGES (2)					
	Input voltage to all other input pins		–0.5	VREF + 0.5	V
INPUT CURRENTS					
	Current required from a high-level output	V_{OH} = 1.4 V		–9	mA
	Current required from a low-level output	V_{OL} = 0.4 V		18	mA
CLOCKS					
f_{CLK}	DCLK clock frequency		80	120	MHz
ENVIRONMENTAL					
T_{CASE}	Case temperature - operational (4)		–20	90	°C
	Case temperature - non-operational (4)		–40	90	°C
T_{DP}	Dew Point (operation and non-operational)			81	°C
	Operating Relative Humidity (non-condensing)		0	95	%RH

(1) Stresses beyond those listed under *Absolute Maximum Ratings* may cause permanent damage to the device. These are stress ratings only, and functional operation of the device is not implied at these or any conditions beyond those indicated under *Recommended Operating Conditions*. Exposure above Recommended Operating Conditions for extended periods may affect device reliability.
(2) All voltage values are referenced to common ground VSS. Supply voltages VCC, VREF, VOFFSET, VBIAS, and VRESET are all required for proper DMD operation. VSS must also be connected.
(3) To prevent excess current, the supply voltage delta |VBIAS – VOFFSET| must be less than the specified limit.
(4) DMD Temperature is the worst-case of any test point shown in Figure 9 or Figure 10, or the active array as calculated by the Micromirror Array Temperature Calculation, or any point along the Window Edge as defined in Figure 9 or Figure 10. The locations of thermal test point TP2 is intended to measure the highest window edge temperature. If a particular application causes another point on the window edge to be at a higher temperature, a test point should be added to that location.

6.2 Storage Conditions

applicable before the DMD is installed in the final product

		MIN	MAX	UNIT
T_{stg}	Storage temperature (1)	–40	85	°C
	Storage humidity, non-condensing (1)	0	95	%RH
	Long-term storage dew point (1) (2)		24	°C
	Short-term storage dew point (1) (3)		28	°C

(1) As a best practice, TI recommends storing the DMD in a temperature and humidity controlled environment.
(2) Long-term is defined as the average over the usable life.
(3) Short-term is defined as <60 cumulative days over the usable life of the device.

6.3 ESD Ratings

			VALUE	UNIT
$V_{(ESD)}$	Electrostatic discharge	Human-body model (HBM), per ANSI/ESDA/JEDEC JS-001 (1) (2) (3)	±2000	V

(1) *ESD Ratings* are applicable before the DMD is installed in final product.
(2) All CMOS devices require proper Electrostatic Discharge (ESD) handling procedures.
(3) JEDEC document JEP155 states that 500-V HBM allows safe manufacturing with a standard ESD control process.

Copyright © 2013–2018, Texas Instruments Incorporated

6.4 Recommended Operating Conditions

over operating free-air temperature range (unless otherwise noted)

		MIN	NOM	MAX	UNIT
SUPPLY VOLTAGES (1)					
VCC	Supply voltage for LVCMOS core logic	2.375	2.5	2.625	V
VREF	Supply voltage for LVCMOS DDR interface	1.6	1.9	2	V
VOFFSET	Supply voltage for HVCMOS and micromirror electrode (2) (3)	8.25	8.5	8.75	V
VBIAS	Supply voltage for micromirror electrode (2)	15.5	16	16.5	V
VRESET	Supply voltage for micromirror electrode	–9.5	–10	–10.5	V
|VBIAS – VOFFSET|	Supply voltage delta (absolute value) (2)			8.75	V
VOLTAGE RANGE					
V_{T+}	Positive-going threshold voltage	0.4 × VREF		0.7 × VREF	V
$V_{T–}$	Negative-going threshold voltage	0.3 × VREF		0.6 × VREF	V
V_{hys}	Hysteresis voltage ($V_{T+} – V_{T–}$)	0.1 × VREF		0.4 × VREF	V
CLOCK FREQUENCY					
$f_{(CLK)}$	DCLK clock frequency	80		120	MHz
ENVIRONMENTAL (4)					
T_{DMD}	DMD temperature - operational, long-term (5) (6)	10		40 to 70 (7)	°C
	DMD temperature - operational, short-term	–20		70	°C
T_{Window}	DMD window temperature - operational	0		90	°C
$T_{CERAMIC-WINDOW-DELTA}$	DMD |ceramic TP1 - window| temperature delta - operational (8) (9)	0		30	°C
	DMD long-term dewpoint (operational, non-operational)			24	°C
	DMD short-term dewpoint (operational, non-operational) (10)			28	°C
ILLUMINATION					
ILL_{UV-VIS}	Illumination power - spectral region <420 nm			0.68	mW/cm^2
ILL_{VIS}	Illumination power - spectral region 420 to 700 nm, FQE package			Thermally Limited (11)	mW/cm^2
	Illumination power - spectral region 420 to 700 nm, FQD package			Thermally Limited (11)	mW/cm^2
ILL_{IR}	Illumination power - spectral region >700 nm			10	mW/cm^2

(1) Supply voltages VCC, VREF, VOFFSET, VBIAS, and VRESET are all required for proper DMD operation. All voltage values are referenced to common ground VSS.
(2) To prevent excess current, the supply voltage delta |VBIAS – VOFFSET| must be less than specified limit.
(3) VOFFSET supply transients must fall within specified max voltages.
(4) Optimal long-term performance and optical efficiency of the digital micromirror device (DMD) can be affected by various application parameters, including illumination spectrum, illumination power density, micromirror landed duty cycle, ambient temperature (storage and operating), DMD temperature, ambient humidy (storage and operating), and power on or off duty cycle.
(5) DMD temperature is the worst-case of any test point shown in Figure 9 or Figure 10, or the active array as calculated by the *Micromirror Array Temperature Calculation* , or any point along the window edge as defined in Figure 9 or Figure 10. The locations of thermal test point TP2 in Figure 9 or Figure 10 is intended to measure the highest window edge temperature. If a particular application causes another point on the window edge to be at a higher temperature, a test point should be added to that location.
(6) Long-term is defined as the average over the usable life.
(7) Per Figure 1, the maximum operational case temperature at test points TP1 and TP2 as shown in Figure 9 or Figure 10 should be derated based on the micromirror landed duty cycle that the DMD experiences in the end application. Refer to *Micromirror Landed-on/Landed-Off Duty Cycle* for a definition of landed duty cycle.
(8) Between any two points on or within the package including the mirror array.
(9) Ceramic package and window temperature as measured at test points TP1 and TP2 in Figure 9 or Figure 10.
(10) Dew points beyond the specified long-term dew point (operating, non-operating, or storage) are for short-term conditions only, where short-term is defined as <60 cumulative days over the useful life of the device.
(11) Refer to *Micromirror Array Temperature Calculation* and *Temperature Calculation* for information related to calculating the micromirror array temperature.

Copyright © 2013–2018, Texas Instruments Incorporated

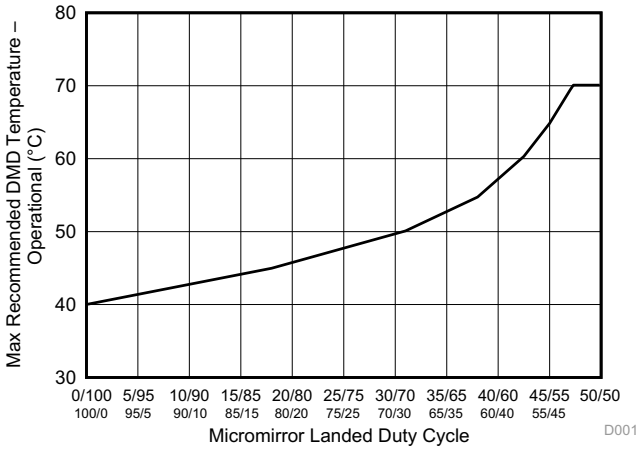

Figure 1. Maximum Recommended DMD Temperature – Derating Curve

Copyright © 2013–2018, Texas Instruments Incorporated

6.5 Thermal Information

over operating free-air temperature range (unless otherwise noted)

THERMAL METRIC	DLP4500		UNIT
	FQE (LCCC)	FQD (LCCC)	
	80 PINS	98 PINS	
Thermal resistance - Active area to case ceramic (1)	2	2	°C/W

(1) The DMD is designed to conduct absorbed and dissipated heat to the back of the package. The cooling system must be capable of maintaining the package within the temperature range specified in the Recommended Operating Conditions. The total heat load on the DMD is largely driven by the incident light absorbed by the active area; although other contributions include light energy absorbed by the window aperture and electrical power dissipation of the array. Optical systems should be designed to minimize the light energy falling outside the window clear aperture since any additional thermal load in this area can significantly degrade the reliability of the device.

6.6 Electrical Characteristics

over the range of recommended supply voltage and recommended case operating temperature (unless otherwise noted)

PARAMETER		TEST CONDITIONS		MIN	NOM	MAX	UNIT
I_{IL}	Low-level input current (1)	VREF = 2.00 V	V_I = 0 V	–50			nA
I_{IH}	High-level input current (1)	VREF = 2.00 V	V_I = VREF			50	nA
CURRENT							
I_{REF}	Current into VREF pin	VREF = 2.00 V	f_{DCLK} = 120 MHz		2.15	2.75	mA
I_{CC}	Current into VCC pin	VCC = 2.75 V	f_{DCLK} = 120 MHz		125	160	mA
I_{OFFSET}	Current into VOFFSET pin (2)	VOFFSET = 8.75 V	Three global resets within time period = 200 µs		3	3.3	mA
I_{BIAS}	Current into VBIAS pin (2) (3)	VBIAS = 16.5 V	Three global resets within time period = 200 µs		2.55	6.5	mA
I_{RESET}	Current into VRESET pin	VRESET = –10.5 V			2.45	3.1	mA
I_{TOTAL}					135.15	175.65	mA
POWER							
P_{REF}	Power into VREF pin (4)	VREF = 2.00 V	f_{DCLK} = 120 MHz		4.15	5.5	mW
P_{CC}	Power into VCC pin (4)	VCC = 2.75 V	f_{DCLK} = 120 MHz		343.75	440	mW
P_{OFFSET}	Power into VOFFSET pin (4)	VOFFSET = 8.75 V	Three global resets within time period = 200 µs		26.25	28.9	mW
P_{BIAS}	Power into VBIAS pin (4)	VBIAS = 16.5 V	Three global resets within time period = 200 µs		42.1	58.6	mW
P_{RESET}	Power into VRESET pin (4)	VRESET = –10.5 V			25.71	32.6	mW
P_{TOTAL}					442	566	mW
CAPACITANCE							
C_I	Input capacitance	f = 1 MHz				10	pF
C_O	Output capacitance	f = 1 MHz				10	pF

(1) Applies to LVCMOS pins only. LVCMOS pins do not have pullup or pulldown configurations.
(2) Exceeding the maximum allowable absolute voltage difference between VBIAS and VOFFSET may result in excess current draw. See the *Absolute Maximum Ratings* for further details.
(3) When $\overline{DRC_OE}$ = HIGH, the internal reset drivers are tri-stated and I_{BIAS} standby current is 6.5 mA.
(4) In some applications, the total DMD heat load can be dominated by the amount of incident light energy absorbed. See the *Micromirror Array Temperature Calculation* for further details.

Copyright © 2013–2018, Texas Instruments Incorporated

6.7 Timing Requirements

Over operating free-air temperature range (unless otherwise noted). This data sheet provides timing at the device pin.

			MIN	NOM	MAX	UNIT
$t_{su(1)}$	Setup time: DATA before rising or falling edge of DCLK (1)		0.7			ns
	Setup time: TRC before rising or falling edge of DCLK (1)		0.7			
	Setup time: SCTRL before rising or falling edge of DCLK (1)		0.7			
$t_{su(2)}$	Setup time: $\overline{\text{LOADB}}$ low before rising edge of DCLK (1)		0.7			ns
$t_{su(3)}$	Setup time: SAC_BUS low before rising edge of SAC_CLK (1)		1			ns
$t_{su(4)}$	Setup time: DRC_BUS high before rising edge of SAC_CLK (1)		1			ns
$t_{su(5)}$	Setup time: DRC_STROBE high before rising edge of SAC_CLK (1)		2			ns
$t_{h(1)}$	Hold time: DATA after rising or falling edge of DCLK (1)		0.7			ns
	Hold time: TRC after rising or falling edge of DCLK (1)		0.7			
	Hold time: SCTRL after rising or falling edge of DCLK (1)		0.7			
$t_{h(2)}$	Hold time: $\overline{\text{LOADB}}$ low after falling edge of DCLK (1)		0.7			ns
$t_{h(3)}$	Hold time: SAC_BUS low after rising edge of SAC_CLK (1)		1			ns
$t_{h(4)}$	Hold time: DRC_BUS after rising edge of SAC_CLK (1)		1			ns
$t_{h(5)}$	Hold time: DRC_STROBE after rising edge of SAC_CLK (1)		2			ns
t_r	Rise time (20% to 80%): DCLK / SAC_CLK	VREF = 1.8 V			1.08	ns
	Rise time (20% to 80%): DATA / TRC / SCTRL / $\overline{\text{LOADB}}$	VREF = 1.8 V			1.08	
t_f	Fall time (20% to 80%): DCLK / SAC_CLK	VREF = 1.8 V			1.08	ns
	Fall time (20% to 80%): DATA / TRC / SCTRL / $\overline{\text{LOADB}}$				1.08	
t_{c1}	Clock cycle: DCLK		8.33	10	12.5	ns
t_{c3}	Clock cycle: SAC_CLK		12.5	13.33	14.3	ns
t_{w1}	Pulse width high or low: DCLK		3.33			ns
t_{w2}	Pulse width low: $\overline{\text{LOADB}}$		4.73			ns
t_{w3}	Pulse width high or low: SAC_CLK		5			ns
t_{w5}	Pulse width high: DRC_STROBE		7			ns

(1) Setup and hold times shown are for fast input slew rates >1 V/ns. For slow slew rates >0.5 V/ns and <1 V/ns, the setup and hold times are longer. For every 0.1 V/ns decrease in slew rate from 1 V/ns, add 150 ps on setup and hold.

Copyright © 2013–2018, Texas Instruments Incorporated

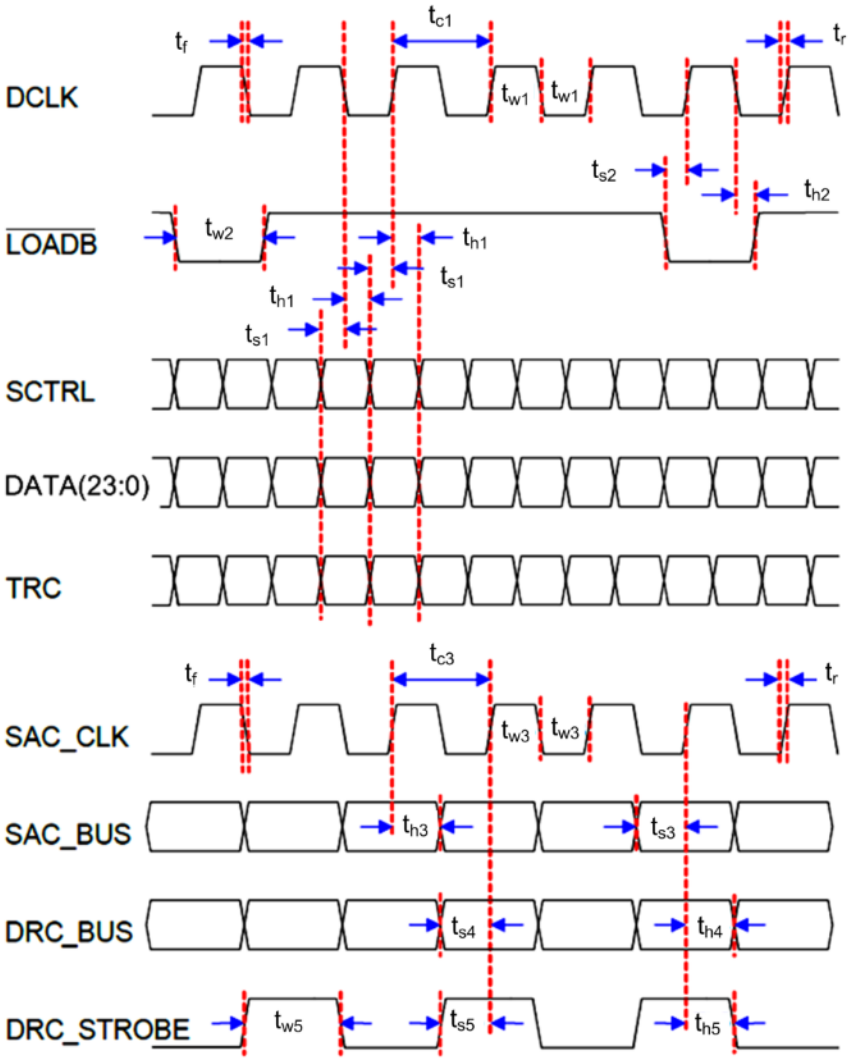

Figure 2. Timing Diagram

6.8 System Mounting Interface Loads

			MIN	NOM	MAX	UNIT
Static load applied to the package electrical connector area (1)	FQE package(2)	Uniformly distributed across the three datum-A areas and the datum-E area.			110	N
Static load applied to the DMD mounting area (1)					110	N
Load applied to the thermal interface area (3)	FQD package(4)	Uniformly distributed over Thermal Interface area			62	N
Load applied to the electrical interface areas (3)		Uniformly distributed over each of the two areas			55	N

(1) See and *Mechanical, Packaging, and Orderable Information* for diagrams.
(2) See Mounting Concepts DLP4500FQE.
(3) See and Figure 4 for diagrams.
(4) See Mounting Concepts DLP4500FQD.

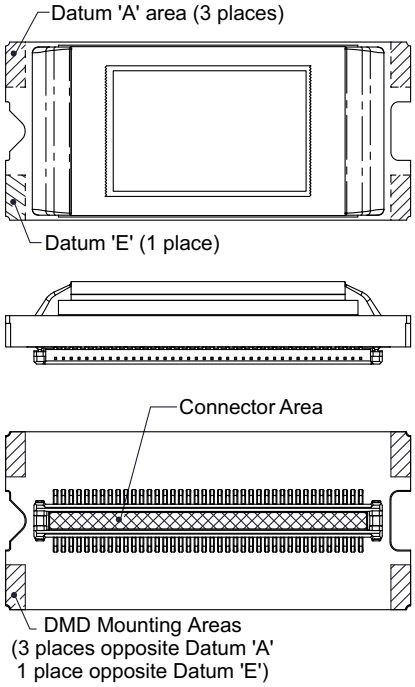

Figure 3. System Interface Loads for FQE

Copyright © 2013–2018, Texas Instruments Incorporated

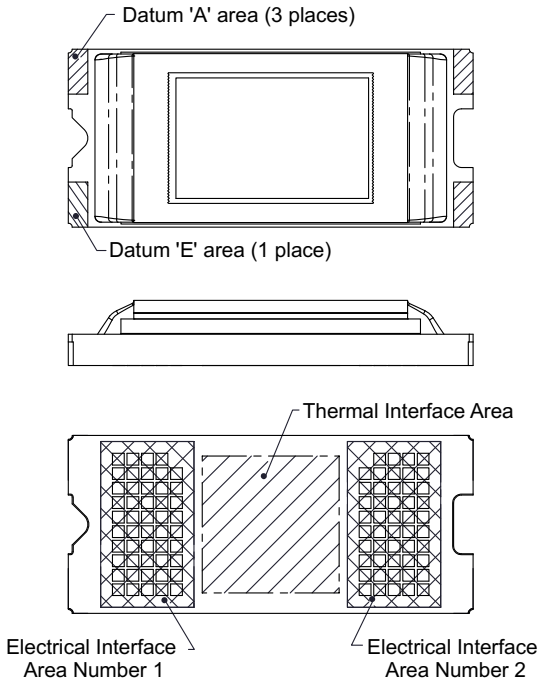

Figure 4. System Interface Loads for FQD

6.9 Micromirror Array Physical Characteristics

	VALUE	UNIT
Number of active micromirror rows (1)	1140	micromirrors
Number of active micromirror columns (1)	912	micromirrors
Micromirror pitch, diagonal (1)	7.6	µm
Micromirror pitch, vertical and horizontal (1)	10.8	µm
Micromirror active array height (2)	1140	micromirrors
	6161.4	µm
Micromirror active array width (2)	912	micromirrors
	9855	µm
Micromirror array border (3)	10	mirrors/side

(1) See *Micromirror Array, Pitch, and Hinge-Axis Orientation*.
(2) See Micromirror Active Area in *Figure 5*.
(3) The mirrors that form the array border are hard-wired to tilt in the –12° ("Off") direction once power is applied to the DMD (see *Micromirror Array, Pitch, and Hinge-Axis Orientation* and *Micromirror Landed Positions and Light Paths*).

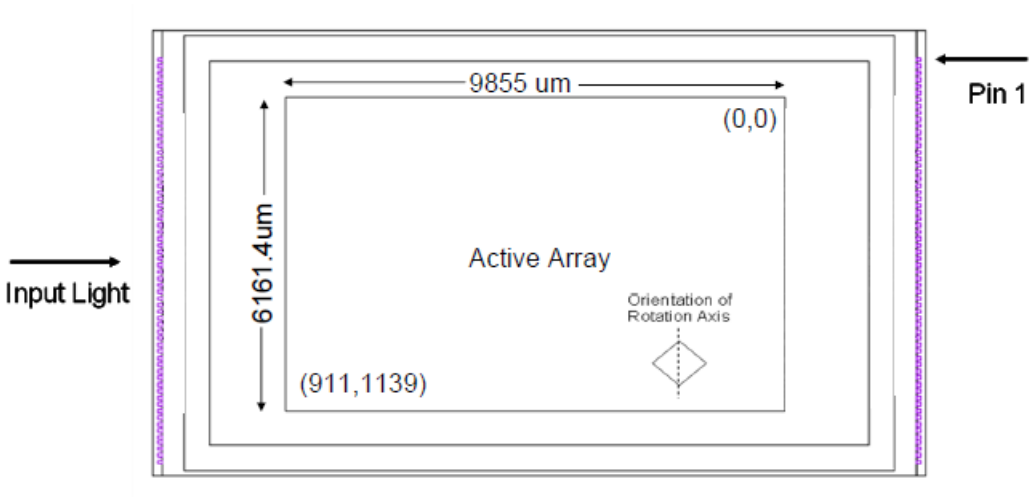

Figure 5. DLP4500 Micromirror Active Area

Copyright © 2013–2018, Texas Instruments Incorporated

6.10 Micromirror Array Optical Characteristics

TI assumes no responsibility for end-equipment optical performance. Achieving the desired end-equipment optical performance involves making trade-offs between numerous component and system design parameters. See the related application reports in *Related Documentation* for guidelines.

PARAMETER		TEST CONDITIONS	MIN	NOM	MAX	UNIT
α	Micromirror tilt angle	DMD *parked* state (1) (2) (3), see (4)		0		degrees
		DMD *landed* state (1) (5) (6), see (4)	11	12	13	
β	Micromirror tilt angle variation (1) (5) (7) (8) (9)	See (4)	–1		1	degrees
	Micromirror crossover time (10) (11)			5		µs
	Micromirror switching time (11)			16		µs
	Non-operating micromirrors (12)	Non-adjacent micromirrors			10	micromirrors
		Adjacent micromirrors			0	
	Orientation of the micromirror axis-of-rotation (13)		89	90	91	degrees
	Micromirror array fill factor (14) (15) (16)	f/3 illumination at 24 degree angle, mirrors tilted toward illumination		92%		
	Mirror metal specular reflectivity (14) (15)	420 nm to 700 nm		89%		
	Window material			Corning Eagle XG		
	Window aperture			See (17)		

(1) Measured relative to the plane formed by the overall micromirror array.
(2) *Parking* the micromirror array returns all of the micromirrors to a relatively flat (0˚) state (as measured relative to the plane formed by the overall micromirror array).
(3) When the micromirror array is *parked*, the tilt angle of each individual micromirror is uncontrolled.
(4) See Figure 8.
(5) Additional variation exists between the micromirror array and the package datums.
(6) When the micromirror array is *landed*, the tilt angle of each individual micromirror is dictated by the binary contents of the CMOS memory cell associated with each individual micromirror. A binary value of 1 results in a micromirror *landing* in an nominal angular position of +12°. A binary value of 0 results in a micromirror *landing* in an nominal angular position of –12°.
(7) Represents the *landed* tilt angle variation relative to the nominal *landed* tilt angle
(8) Represents the variation that can occur between any two individual micromirrors, located on the same device or located on different devices.
(9) For some applications, it is critical to account for the micromirror tilt angle variation in the overall system optical design. With some system optical designs, the micromirror tilt angle variation within a device may result in perceivable non-uniformities in the light field reflected from the micromirror array. With some system optical designs, the micromirror tilt angle variation between devices may result in colorimetry variations or system contrast variations.
(10) Micromirror crossover time is primarily a function of the natural response time of the micromirrors.
(11) Performance as measured at the start of life.
(12) Non-operating micromirror is defined as a micromirror that is unable to transition nominally from the –12° position to +12° or vice versa.
(13) Measured relative to the package datums B and C, shown in the Package Mechanical Data section in *Mechanical, Packaging, and Orderable Information*.
(14) The nominal DMD total optical efficiency results from the following four components:
  (a) Micromirror array fill factor
  (b) Micromirror array diffraction efficiency
  (c) Micromirror surface reflectivity (very similar to the reflectivity of bulk Aluminum)
  (d) Window Transmission (single pass through two surfaces for incoming light, and single pass through two surfaces for reflected light)
(15) The DMD diffraction efficiency and total optical efficiency observed in a specific application depends on numerous application-specific design variables, such as:
  (a) Illumination wavelength, bandwidth or line-width, degree of coherence
  (b) Illumination angle, plus angle tolerence
  (c) Illumination and projection aperture size, and location in the system optical path
  (d) Illumination overfill of the DMD micromirror array
  (e) Aberrations present in the illumination source or path, or both
  (f) Aberrations present in the projection path

  Does not account for the effect of micromirror switching duty cycle, which is application dependent. Micromirror switching duty cycle represents the percentage of time that the micromirror is actually reflecting light from the optical illumination path to the optical projection path. This duty cycle depends on the illumination aperture size, the projection aperture size, and the micromirror array update rate.
(16) The Micromirror array fill factor depends on numerous application-specific design variables, such as:
  (a) Illumination angle, plus angle tolerance
  (b) Illumination and projection aperture size, and location in the system optical path
(17) See the Package Mechanical Characteristics in *Mechanical, Packaging, and Orderable Information* for details regarding the size and location of the window aperture.

Copyright © 2013–2018, Texas Instruments Incorporated

Micromirror Array Optical Characteristics (continued)

TI assumes no responsibility for end-equipment optical performance. Achieving the desired end-equipment optical performance involves making trade-offs between numerous component and system design parameters. See the related application reports in *Related Documentation* for guidelines.

PARAMETER	TEST CONDITIONS	MIN	NOM	MAX	UNIT
Illumination overfill (18)			See (18)		
Window transmittance (single pass through two window surfaces) (14) (15)	420 nm to 700 nm, See Figure 6		96%		

(18) The active area of the DLP4500 device is surrounded by an aperture on the inside of the DMD window surface that masks structures of the DMD device assembly from normal view. The aperture is sized to anticipate several optical conditions. Overfill light illuminating the area outside the active array can scatter and create adverse effects to the performance of an end application using the DMD. The illumination optical system should be designed to limit light flux incident outside the active array to less than 10% of the light flux level in the active area. Depending on the particular system's optical architecture and assembly tolerances, the amount of overfill light on the outside of the active array may cause system performance degradation .

6.11 Typical Characteristics

Single pass through two window surfaces.

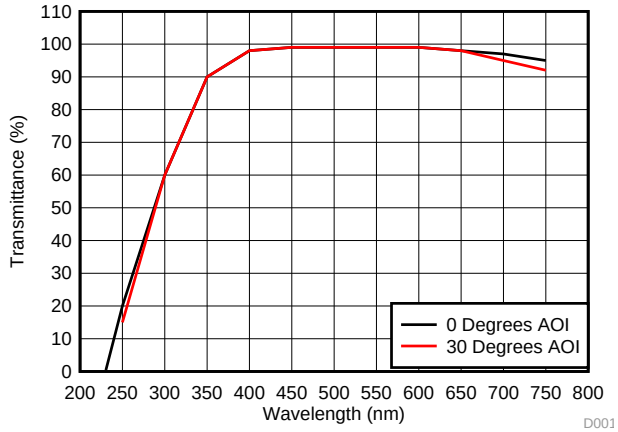

Figure 6. DLP4500 DMD Window Transmittance

Copyright © 2013–2018, Texas Instruments Incorporated

7 Detailed Description

7.1 Overview

Electrically, the DLP4500 device consists of a two-dimensional array of 1-bit CMOS memory cells, organized in a grid of 912 memory cell columns by 1140 memory cell rows. The CMOS memory array is addressed on a column-by-column basis, over a 24-bit DDR bus. Addressing is handled through a serial control bus. The specific CMOS memory access protocol is handled by the DLPC350 digital controller.

Optically, the DLP4500 device consists of 1039680 highly reflective, digitally switchable, micrometer-sized mirrors (micromirrors) organized in a two-dimensional array. The micromirror array consists of 912 micromirror columns by 1140 micromirror rows in diamond pixel configuration (Figure 7). Due to the diamond pixel configuration, the columns of each odd row are offset by half a pixel from the columns of the even row.

7.2 Functional Block Diagram

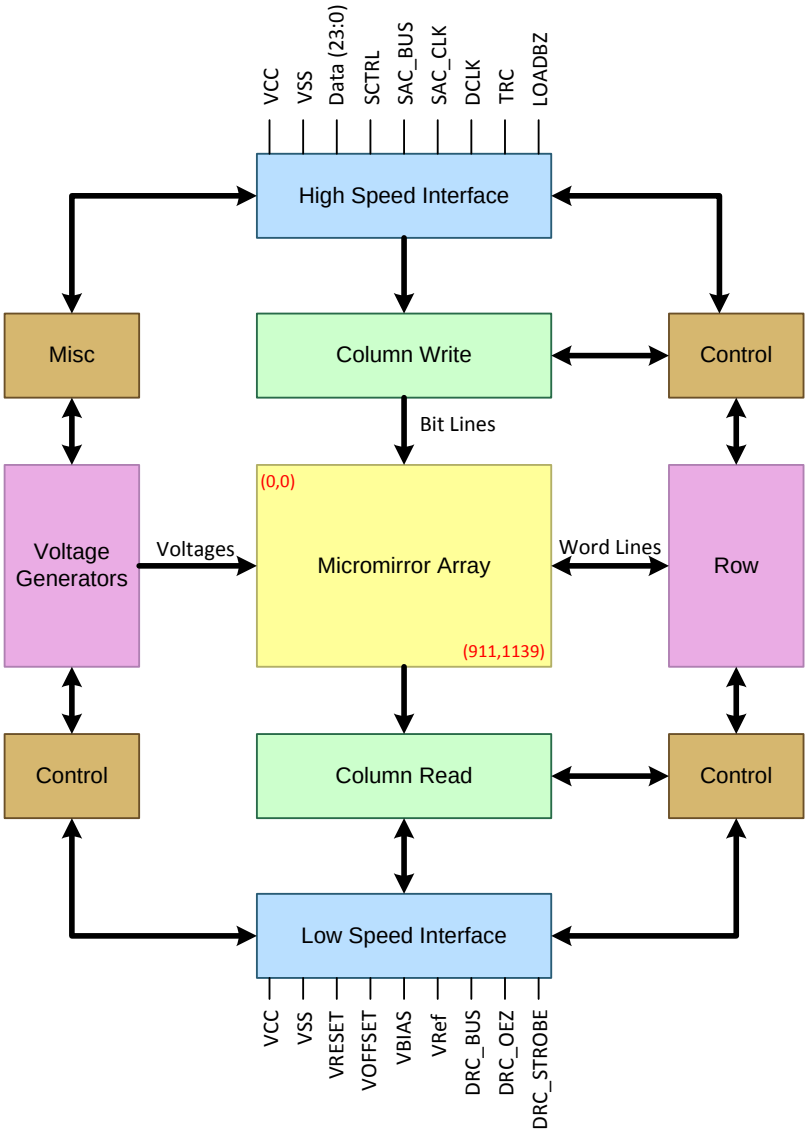

7.3 Feature Description

Each aluminum micromirror is approximately 7.6 microns in size and arranged in row and columns as shown in Figure 7. Due to the diamond pixel array of the DMD, the pixel data does not appear on the DMD exactly as it would in an orthogonal pixel arrangement. Pixel arrangement and numbering for the DLP4500 is shown in Figure 7.

Each micromirror is switchable between two discrete angular positions: –12° and 12°. The angular positions α and β are measured relative to a 0° *flat reference when the mirrors are parked in their inactive state*, parallel to the array plane (see Figure 8). The parked position is not a latched position. Individual micromirror angular positions are relatively flat, but do vary. The tilt direction is perpendicular to the hinge-axis. The on-state landed position is directed toward the left side of the package (see Figure 8).

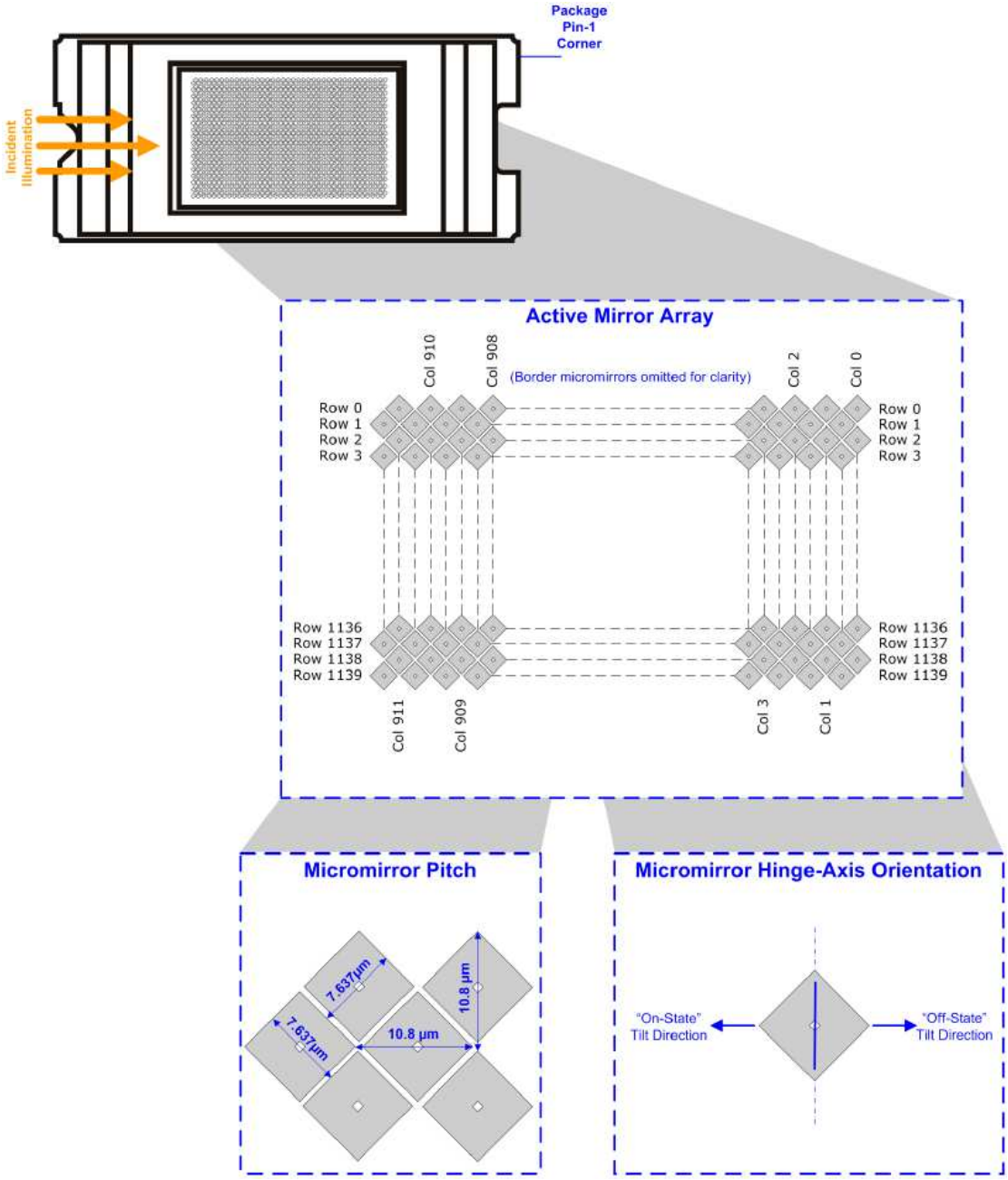

Figure 7. Micromirror Array, Pitch, and Hinge-Axis Orientation

Copyright © 2013–2018, Texas Instruments Incorporated

Feature Description (continued)

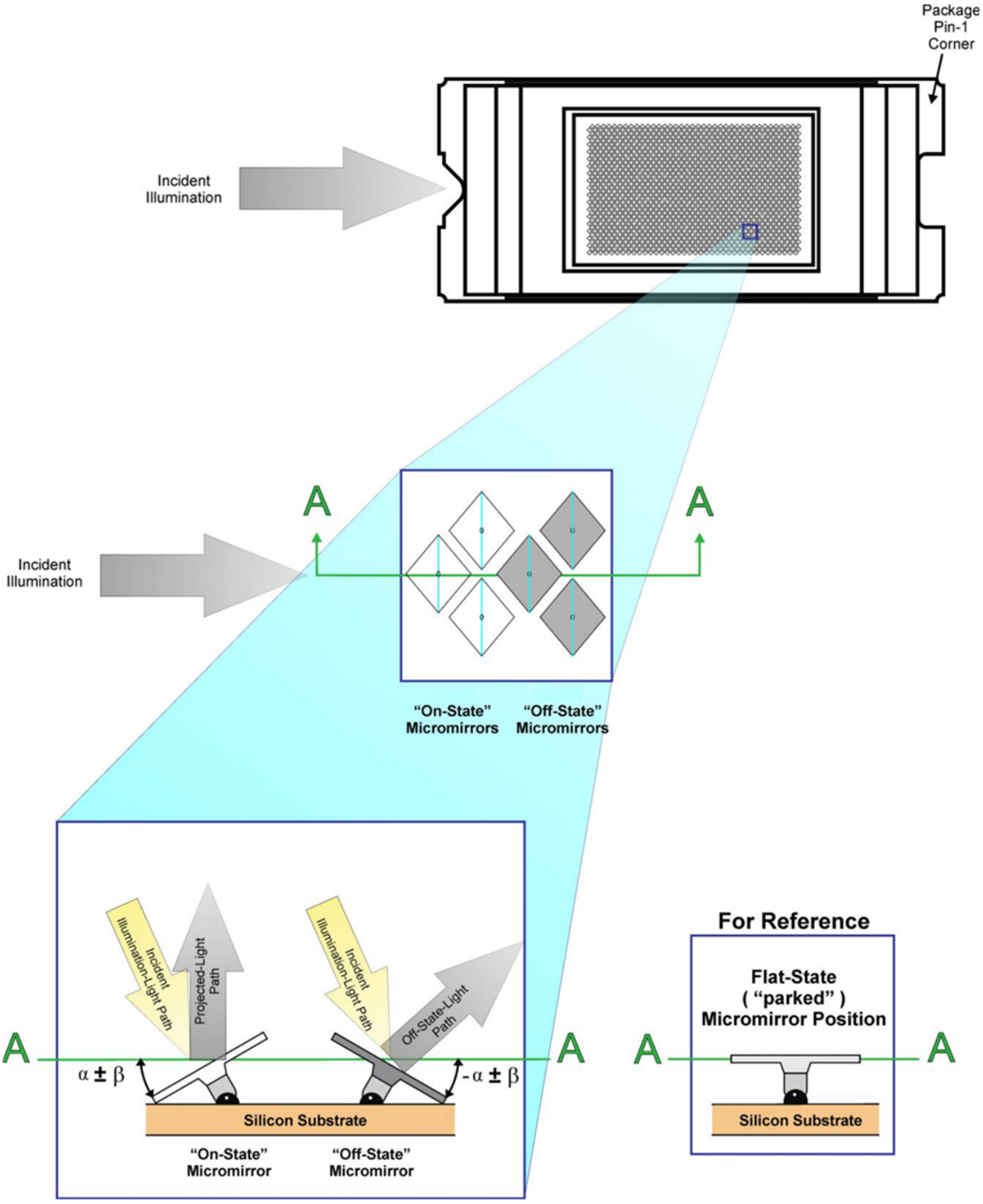

Figure 8. Micromirror Landed Positions and Light Paths

Copyright © 2013–2018, Texas Instruments Incorporated

Feature Description (continued)

Each individual micromirror is positioned over a corresponding CMOS memory cell. The angular position of a specific micromirror is determined by the binary state (logic 0 or 1) of the corresponding CMOS memory cell contents, after the mirror *clocking pulse* is applied. The angular position (–12° or 12°) of the individual micromirrors changes synchronously with a micromirror clocking pulse, rather than being coincident with the CMOS memory cell data update. Therefore, writing a logic 1 into a memory cell followed by a mirror clocking pulse results in the corresponding micromirror switching to a 12° position. Writing a logic 0 into a memory cell followed by a mirror clocking pulse results in the corresponding micromirror switching to a –12° position.

Updating the angular position of the micromirror array consists of two steps.

1. Update the contents of the CMOS memory.
2. Applying a mirror clocking pulse to the entire micromirror array.

Mirror reset pulses are generated internally by the DLP4500 DMD, with initiation of the pulses being coordinated by the DLPC350 controller. For timing specifications, see *Timing Requirements*.

Around the perimeter of the 912 × 1140 array of micromirrors is a uniform band of *border* micromirrors. The border micromirrors are not user-addressable. The border micromirrors land in the –12° position after power has been applied to the device. There are 10 border micromirrors on each side of the 912 × 1140 active array.

7.4 Device Functional Modes

DLP4500 is part of the chipset comprising of the DLP4500 DMD and DLPC350 display controller. To ensure reliable operation, the DLP4500 DMD must always be used with the DLPC350 display controller. DMD functional modes are controlled by the DLPC350 digital display controller. See the DLPC350 data sheet listed in *Related Documentation*.

7.4.1 Operating Modes

The DLPC350 is capable of sending patterns to the DLP4500 DMD in two different streaming modes. The first mode is continuous streaming mode, where the DLPC350 uses the parallel RGB interface to stream the 24-bit patterns to the DMD. The second mode is burst mode, where the DLPC350 loads up to 48 binary patterns from flash storage into internal memory, and then streams those patterns to the DMD. Table 1 shows the maximum pattern and data rates for both modes of operation.

Table 1. Pattern and Data Rates

OPERATING MODE	PATTERN RATE (Hz)	DATA RATE (Gbps)	MAXIMUM BINARY PATTERNS
Continuous Streaming(1)	2880	2.99	Unlimited
Burst(2)	4220	4.39	48

(1) Continuous streaming mode uses patterns from RGB interface.
(2) Burst mode uses patterns from internal memory.

7.5 Micromirror Array Temperature Calculation

Achieving optimal DMD performance requires proper management of the maximum DMD case temperature, the maximum temperature of any individual micromirror in the active array, the maximum temperature of the window aperture, and the temperature gradient between any two points on or within the package.

See the *Absolute Maximum Ratings* and *Recommended Operating Conditions* for applicable temperature limits.

7.5.1 Package Thermal Resistance

The DMD is designed to conduct the absorbed and dissipated heat back to the package where it can be removed by an appropriate thermal management system. The thermal management system must be capable of maintaining the package within the specified operational temperatures at the Thermal test point location, see Figure 9. The total heat load on the DMD is typically driven by the incident light absorbed by the active area; although other contributions can include light energy absorbed by the window aperture, electrical power dissipation of the array, and/or parasitic heating.

Copyright © 2013–2018, Texas Instruments Incorporated

Micromirror Array Temperature Calculation (continued)

7.5.2 Case Temperature

The temperature of the DMD case can be measured directly. For consistency, a thermal test point location TP1 representing the case temperature is defined as shown in Figure 9 and Figure 10.

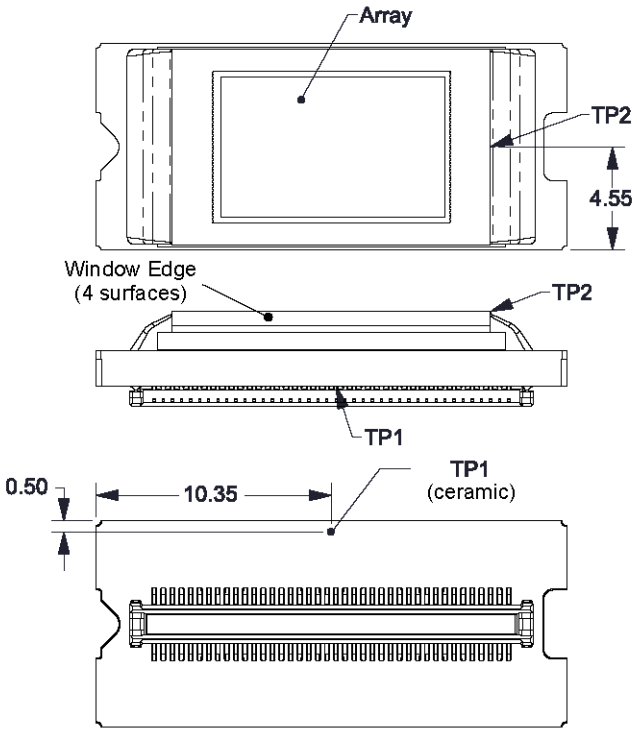

Figure 9. Thermal Test Point Location - FQE Package

Micromirror Array Temperature Calculation (continued)

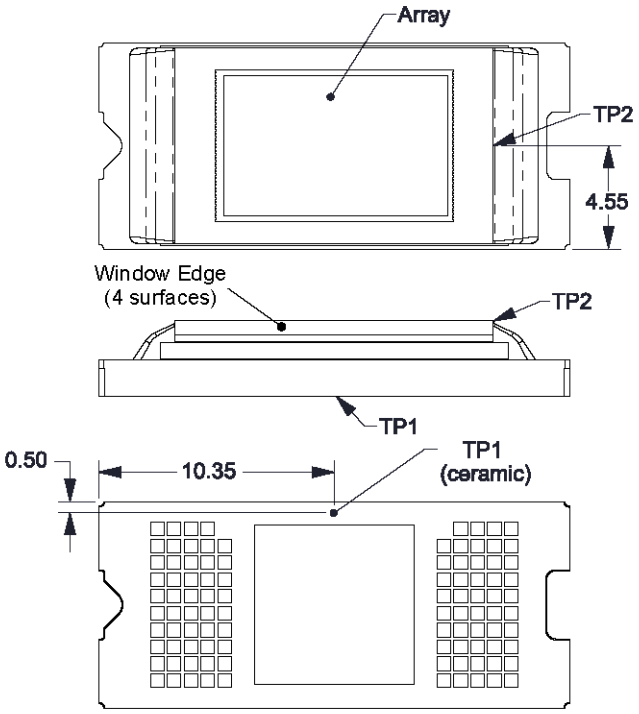

Figure 10. Thermal Test Point Location - FQD Package

7.5.2.1 Temperature Calculation

Micromirror array temperature cannot be measured directly. Therefore, it must be computed analytically from:

- Thermal test point location (see Figure 9 or Figure 10)
- Package thermal resistance
- Electrical power dissipation
- Illumination heat load

The relationship between the micromirror array and the case temperature is provided by the following equations:

$$T_{Array} = T_{Ceramic} + (Q_{Array} \times R_{Array\text{-}To\text{-}Ceramic}) \quad (1)$$

$$Q_{Array} = Q_{Elec} + Q_{Illum} \quad (2)$$

$$Q_{Illum} = C_{L2W} \times SL$$

where

- T_{Array} = Computed micromirror array temperature (°C)
- $T_{Ceramic}$ = Ceramic case temperature (°C), located at TP1
- Q_{Array} = Total (electrical + absorbed) DMD array power (W)
- $R_{Array\text{-}to\text{-}Ceramic}$ = Thermal resistance of DMD package from array to TP1 (°C/W)
- Q_{Elec} = Nominal electrical power (W)
- Q_{Illum} = Absorbed illumination heat (W)
- C_{L2W} = Lumens-to-watts constant, estimated at 0.00293 W/lm, based on array characteristics. It assumes a spectral efficiency of 300 lm/W for the projected light, illumination distribution of 83.7% on the active array, and 16.3% on the array border and window aperture
- SL = Screen lumens (3)

Copyright © 2013–2018, Texas Instruments Incorporated

Micromirror Array Temperature Calculation (continued)

An example calculation is provided in Equation 4 and Equation 5. DMD electrical power dissipation varies and depends on the voltage, data rates, and operating frequencies. The nominal electrical power dissipation is used in this calculation with nominal screen lumens of 200 lm and a ceramic case temperature at TP1 of 55°C. Using these values in the previous equations, the following values are computed:

$$Q_{Array} = Q_{Elec} + C_{L2W} \times SL = 0.442\ W + (0.00293\ W/lm \times 200\ lm) = 1.028\ W \quad (4)$$

$$T_{Array} = T_{Ceramic} + (Q_{Array} \times R_{Array\text{-}To\text{-}Ceramic}) = 55°C + (1.028\ W \times 2°C/W) = 57.1°C \quad (5)$$

7.6 Micromirror Landed-on/Landed-Off Duty Cycle

7.6.1 Definition of Micromirror Landed-On/Landed-Off Duty Cycle

The micromirror landed-on/landed-off duty cycle (landed duty cycle) denotes the amount of time (as a percentage) that an individual micromirror is landed in the On–state versus the amount of time the same micromirror is landed in the Off–state.

As an example, a landed duty cycle of 100/0 indicates that the referenced micromirror is in the On–state 100% of the time (and in the Off–state 0% of the time); whereas 0/100 would indicate that the micromirror is in the Off–state 100% of the time. Likewise, 50/50 indicates that the micromirror is On 50% of the time and Off 50% of the time.

Note that when assessing landed duty cycle, the time spent switching from one state (ON or OFF) to the other state (OFF or ON) is considered negligible and is thus ignored.

Since a micromirror can only be landed in one state or the other (ON or OFF), the two numbers (percentages) always add to 100.

7.6.2 Landed Duty Cycle and Useful Life of the DMD

Knowing the long-term average landed duty cycle (of the end product or application) is important because subjecting all (or a portion) of the DMD's micromirror array (also called the active array) to an asymmetric landed duty cycle for a prolonged period of time can reduce the DMD's usable life.

The symmetry of the landed duty cycle is determined by how close the On-state and Off-state percentages are to being equal. For example, a landed duty cycle of 50/50 is perfectly symmetrical whereas a landed duty cycle of 100/0 or 0/100 is perfectly asymmetrical.

7.6.3 Landed Duty Cycle and Operational DMD Temperature

Operational DMD temperature and landed duty cycle interact to affect the DMD's usable life, and this interaction can be exploited to reduce the impact that an asymmetrical landed duty cycle has on the DMD's usable life. This is quantified in the de-rating curve shown in Figure 1. The importance of this curve is that:

- All points along this curve represent the same usable life.
- All points above this curve represent lower usable life (and the further away from the curve, the lower the usable life).
- All points below this curve represent higher usable life (and the further away from the curve, the higher the usable life).

In practice, this curve specifies the maximum operating DMD temperature that the DMD should be operated at for a given long-term average landed duty cycle.

7.6.4 Estimating the Long-Term Average Landed Duty Cycle of a Product or Application

During a given period of time, the landed duty cycle of a given micromirror follows from the image content being displayed by that micromirror.

For example, in the simplest case, when displaying pure-white on a given micromirror for a given time period, that micromirror will experience a 100/0 landed duty cycle during that time period. Likewise, when displaying pure-black, the micromirror will experience a 0/100 landed duty cycle.

Between the two extremes (ignoring for the moment color and any image processing that may be applied to an incoming image), the landed duty cycle tracks one-to-one with the linear gray scale value, as shown in Table 2.

Copyright © 2013–2018, Texas Instruments Incorporated

Table 2. Grayscale Value and Landed Duty Cycle

GRAYSCALE VALUE	LANDED DUTY CYCLE
0%	0/100
10%	10/90
20%	20/80
30%	30/70
40%	40/60
50%	50/50
60%	60/40
70%	70/30
80%	80/20
90%	90/10
100%	100/0

Accounting for color rendition (but still ignoring image processing) requires knowing both the color intensity (from 0% to 100%) for each constituent primary color (red, green, and/or blue) for the given micromirror as well as the color cycle time for each primary color, where “color cycle time” is the total percentage of the frame time that a given primary must be displayed in order to achieve the desired white point.

During a given period of time, the landed duty cycle of a given micromirror can be calculated as follows:

Landed Duty Cycle = (Red_Cycle_% × Red_Scale_Value) + (Green_Cycle_% × Green_Scale_Value) + (Blue_Cycle_% × Blue_Scale_Value)

where

- Red_Cycle_%, Green_Cycle_%, and Blue_Cycle_%, represent the percentage of the frame time that Red, Green, and Blue are displayed (respectively) to achieve the desired white point. (6)

For example, assume that the red, green and blue color cycle times are 50%, 20%, and 30% respectively (in order to achieve the desired white point), then the landed duty cycle for various combinations of red, green, blue color intensities would be as shown in Table 3.

Table 3. Example Landed Duty Cycle for Full-Color

RED CYCLE PERCENTAGE 50%	GREEN CYCLE PERCENTAGE 20%	BLUE CYCLE PERCENTAGE 30%	LANDED DUTY CYCLE
RED SCALE VALUE	GREEN SCALE VALUE	BLUE SCALE VALUE	
0%	0%	0%	0/100
100%	0%	0%	50/50
0%	100%	0%	20/80
0%	0%	100%	30/70
12%	0%	0%	6/94
0%	35%	0%	7/93
0%	0%	60%	18/82
100%	100%	0%	70/30
0%	100%	100%	50/50
100%	0%	100%	80/20
12%	35%	0%	13/87
0%	35%	60%	25/75
12%	0%	60%	24/76
100%	100%	100%	100/0

Copyright © 2013–2018, Texas Instruments Incorporated

8 Application and Implementation

NOTE

Information in the following applications sections is not part of the TI component specification, and TI does not warrant its accuracy or completeness. TI's customers are responsible for determining suitability of components for their purposes. Customers should validate and test their design implementation to confirm system functionality.

8.1 Application Information

For reliable operation, the DLP4500 DMD must be coupled with the DLPC350 controller. The DMD is a spatial light modulator which reflects incoming light from an illumination source to one of two directions, with the primary direction being into a projection or collection optic. Each application is derived primarily from the optical architecture of the system and the format of the data coming into the DLPC350. Applications of interest include 3D measurement systems, spectrometers, medical systems, and compressive sensing.

8.2 Typical Application

Figure 11 shows a typical embedded system application using the DLPC350 controller and DLP4500 DMD. In this configuration, the DLPC350 controller supports a 24-bit parallel RGB input, typical of LCD interfaces, from an external source or processor. This system supports both still and motion video sources. However, the controller only supports sources with periodic synchronization pulses. This is ideal for motion video sources, but can also be used for still images by maintaining periodic syncs and only sending a new frame of data when needed. The still image must be fully contained within a single video frame and meet the frame timing constraints. The DLPC350 controller refreshes the displayed image at the source frame rate and repeats the last active frame for intervals in which no new frame has been received.

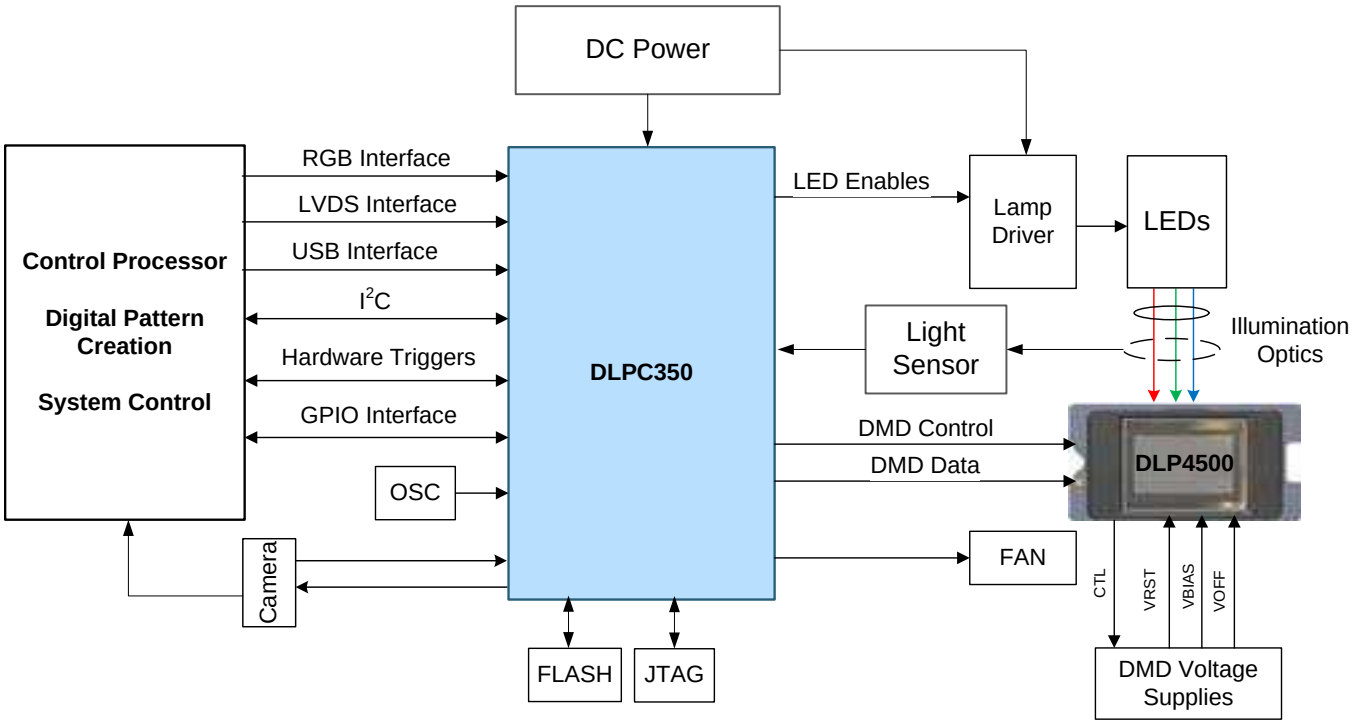

Figure 11. Typical Application Schematic

Typical Application (continued)

8.2.1 Design Requirements

All applications using the DLP4500 chipset require both the controller and DMD components for operation. The system also requires an external parallel flash memory device loaded with the DLPC350 configuration and support firmware. The chipset has several system interfaces and requires some support circuitry. The following interfaces and support circuitry are required:

- DLPC350 system interfaces:
  - Control interface
  - Trigger interface
  - Input data interface
  - Illumination interface
- DLPC350 support circuitry and interfaces:
  - Reference clock
  - PLL
  - Program memory flash interface
- DMD interfaces:
  - DLPC350 to DMD digital data
  - DLPC350 to DMD control interface
  - DLPC350 to DMD micromirror reset control interface

8.2.2 Detailed Design Procedure

8.2.2.1 DLPC350 System Interfaces

The DLP4500 chipset supports a 30-bit parallel RGB interface for image data transfers from another device and a 30-bit interface for video data transfers. The system input requires proper generation of the PWRGOOD and POSENSE inputs to ensure reliable operation. The two primary output interfaces are the illumination driver control interface and sync outputs.

8.2.2.1.1 Control Interface

The DLP4500 chipset accepts control interface commands via the I^2C or USB input buses. The control interface allows another master processor to send commands to the DLP4500 chipset to query system status or perform realtime operations such as programming LED driver current settings.

The DLPC350 controller offers two different sets of slave addresses. The I2C_ADDR_SEL pin provides the ability to select an alternate set of 7-bit I^2C slave addresses only during power-up. If the I2C_ADDR_SEL pin is set low (logic '0'), then the DLPC350 slave addresses are 0x34 and 0x35. If the I2C-ADDR_SEL pin is set high (logic '1'), then the DLPC350 slave address is 0x3A and 0x3B. The I2C_ADDR_SEL pin also changes the serial number for the USB device so that two DLPC350s can be connected to one computer through USB. Once the system initialization is complete, this pin will be available as a GPIO. See the DLPC350 Programmer's Guide (listed in *Related Documentation*) for detailed information about these operations.

Table 4 lists a description for active signals used by the DLPC350 to support the I^2C interface.

Table 4. Active Signals – I^2C Interface

Signal Name	Description
I2C1_SCL	I^2C clock. Bidirectional open-drain signal. I^2C slave clock input from the external processor.
I2C1_SDA	I^2C data. Bidirectional open-drain signal. I^2C slave to accept command or transfer data to and from the external processor.
I2C0_SCL	I^2C bus 0, clock; I^2C master for on-board peripherals
I2C0_SDA	I^2C bus 0, data; I^2C master for on-board peripherals

Copyright © 2013–2018, Texas Instruments Incorporated

8.2.2.1.2 Input Data Interface

The data interface has two input data ports: a parallel RGB-input port and an FPD-Link LVDS input port. Both input ports can support up to 30 bits and have a nominal I/O voltage of 3.3 V. See the DLPC350 controller data sheet (listed in *Related Documentation*) for details relating to maximum and minimum input timing specifications.

The parallel RGB port can support up to 30 bits in video mode. In pattern mode, only the upper 8 bits of each color are recognized, thereby creating a 24 bit bus from the 30 bit input bus.

The FPD-Link input port can be configured to connect to a video decoder device or an external processor through a 24-, 27-, or 30-bit interface.

Table 5 provides a description of the signals associated with the data interface.

Table 5. Active Signals – Data Interface

SIGNAL NAME	DESCRIPTION
RGB Parallel Interface	
P1_(A, B, C)_[0:9]	30-bit data inputs 10 bits for each of the red, green, and blue channels). If interfacing to a system with less than 10-bits per color, connect the bus of the red, green, and blue channels to the upper bits of the DLPC350 10-bit bus.
P1A_CLK	Pixel clock; all input signals on data interface are synchronized with this clock.
P1_VSYNC	Vertical sync
P1_HSYNC	Horizontal sync
P1_DATAEN	Input data valid
FPD-Link LVDS Input	
RCK	Differential input signal for clock
RA_IN	Differential input signal for data channel A
RB_IN	Differential input signal for data channel B
RC_IN	Differential input signal for data channel C
RD_IN	Differential input signal for data channel D
RE_IN	Differential input signal for data channel E

The A, B, and C input data channels of Port 1 can be internally swapped for optimum board layout.

8.2.2.2 DLPC350 System Output Interfaces

8.2.2.2.1 Illumination Interface

An illumination interface is provided that supports an LED driver with up to 3 individual channels.

Table 6 describes the active signals for the illumination interface.

Table 6. Active Signals – Illumination Interface

SIGNAL NAME	DESCRIPTION
HEARTBEAT	LED blinks continuously to indicate system is running fine
FAULT_STATUS	LED off indicates system fault
LEDR_EN	Red LED enable
LEDG_EN	Green LED enable
LEDB_EN	Blue LED enable
LEDR_PWM	Red LED PWM signal used to control the LED current
LEDG_PWM	Green LED PWM signal used to control the LED current
LEDB_PWM	Blue LED PWM signal used to control the LED current

8.2.2.2.2 Trigger Interface (Sync Outputs)

The DLPC350 controller outputs a set of trigger signals for synchronizing displayed patterns with a camera, sensor, or other peripherals. The DLPC350 also has input triggers, where an external processor controls when the patterns are displayed.

Copyright © 2013–2018, Texas Instruments Incorporated

Table 7. Active Signals – Trigger and Sync Interface

SIGNAL NAME	DESCRIPTION
P1_HSYNC	Horizontal sync
P1_VSYNC	Vertical sync
TRIG_IN_1	Advances the pattern display or displays two alternating patterns, depending on the mode
TRIG_IN_2	Pauses the pattern display or advances the pattern by two, depending on the mode
TRIG_OUT_1	Active high during pattern exposure
TRIG_OUT_2	Active high to indicate first pattern display

8.2.2.3 DLPC350 System Support Interfaces

8.2.2.3.1 Reference Clock

The DLPC350 controller requires a 32-MHz 3.3-V external input from an oscillator. This signal serves as the DLP4500 chipset reference clock from which the majority of the interfaces derive their timing. This includes DMD interfaces and serial interfaces.

8.2.2.3.2 PLL

The DLPC350 controller contains two PLLs (PLLM and PLLD), each of which have dedicated 1.2-V digital and 1.8-V analog supplies. These 1.2-V PLL pins should be individually isolated from the main 1.2-V system supply via a ferrite bead. The impedance of the ferrite bead should be much greater than the capacitor at frequencies where noise is expected. The impedance of the ferrite bead must also be less than 0.5 Ω in the frequency range of 100 to 300 kHz and greater than 10 Ω at frequencies greater than 100 MHz.

As a minimum, the 1.8-V analog PLL power and ground pins should be isolated using an LC filter with a ferrite bead serving as the inductor and a 0.1-µF capacitor on the DLPC350 side of the ferrite bead. TI recommends that this 1.8-V PLL power be supplied from a dedicated linear regulator and each PLL should be individually isolated from the regulator. The same ferrite recommendations described for the 1.8-V analog PLL supply apply to the 1.2-V digital PLL supply.

When designing the overall supply filter network, care must be taken to ensure that no resonances occur. Take special care when using the 1- to 2-MHz band because this coincides with the PLL natural loop frequency.

8.2.2.3.3 Program Memory Flash Interface

The DLPC350 controller provides two external program memory chip selects:

- $\overline{\text{PM_CS_1}}$ must be used as the chip select for the boot flash device. (Standard *NOR* Flash ≤ 128 Mb).
- $\overline{\text{PM_CS_2}}$ is available for an optional flash device (≤128 Mb).

The flash access timing is fixed at 100.5 ns for read timing, and 154.1 ns for write timing. In standby mode, these values change to 803.5 ns for read timing and 1232.1 ns for write timing.

These timing values assume a maximum single direction trace length of 75 mm. When an additional flash is used in conjunction with the boot flash, stub lengths must be kept short and located as close as possible to the flash end of the route.

The DLPC350 controller provides enough program memory address pins to support a flash device up to 128 Mb. PM_ADDR_22 and PM_ADDR_21 are tri-stated GPIO pins during reset, so they require board-level pulldown resistors to prevent the flash address bits from floating during initial bootload.

8.2.2.4 DMD Interfaces

8.2.2.4.1 DLPC350 to DMD Digital Data

The DLPC350 controller provides the pattern data to the DMD over a double data rate (DDR) interface. Data is clocked on both rising and falling edges of the DCLK.

Table 8 describes the signals used for this interface.

Copyright © 2013–2018, Texas Instruments Incorporated

Table 8. Active Signals – DLPC350 to DMD Digital Data Interface

DLPC350 SIGNAL NAME	DMD SIGNAL NAME
DMD_D(23:0)	DATA(23:0)
DMD_DCLK	DCLK

8.2.2.4.2 DLPC350 to DMD Control Interface

The DLPC350 controller provides the control data to the DMD over a serial bus.

Table 9 describes the signals used for this interface.

Table 9. Active Signals – DLPC350 to DMD Control Interface

DLPC350 SIGNAL NAME	DMD SIGNAL NAME	DESCRIPTION
DMD_SAC_BUS	SAC_BUS	DMD stepped-address control (SAC) bus data
DMD_SAC_CLK	SAC_CLK	DMD stepped-address control (SAC) bus clock
$\overline{\text{DMD_LOADB}}$	$\overline{\text{LOADB}}$	DMD data load signal
DMD_SCTRL	SCTRL	DMD data serial control signal
DMD_TRC	TRC	DMD data toggle rate control

8.2.2.4.3 DLPC350 to DMD Micromirror Reset Control Interface

The DLPC350 controls the micromirror clock pulses in a manner to ensure proper and reliable operation of the DMD.

Table 10 describes the signals used for this interface.

Table 10. Active Signals – DLPC350 to DMD Micromirror Reset Control Interface

DLPC350 SIGNAL NAME	DMD SIGNAL NAME	DESCRIPTION
DMD_DRC_BUS	DRC_BUS	DMD reset control serial bus
$\overline{\text{DMD_DRC_OE}}$	$\overline{\text{DRC_OE}}$	DMD reset control output enable
DMD_DRC_STRB	DRC_STRB	DMD reset control strobe

Copyright © 2013–2018, Texas Instruments Incorporated

9 Power Supply Recommendations

9.1 Power Supply Sequencing Requirements

The DLP4500 DMD includes five voltage-level supplies (V_{CC}, V_{REF}, V_{OFFSET}, V_{BIAS}, and V_{RESET}), all referenced to VSS ground. For reliable operation of the DLP4500 DMD, the following power supply sequencing requirements must be followed.

CAUTION

Reliable performance of the DMD requires that the following conditions be met:

1. The V_{CC}, V_{REF}, V_{OFFSET}, V_{BIAS}, and V_{RESET} power supply inputs must all be present during operation. All voltages must be referenced to DMD ground (VSS).
2. The V_{CC}, V_{REF}, V_{OFFSET}, V_{BIAS}, and V_{RESET} power supplies must be sequenced on and off in the manner prescribed.

Repeated failure to adhere to the prescribed power-up and power-down procedures may affect device reliability

9.2 DMD Power Supply Power-Up Procedure

1. Power up V_{CC} and V_{REF} in any order.
2. Wait for V_{CC} and V_{REF} to each reach a stable level within their respective recommended operating ranges.
3. Power up V_{BIAS}, V_{OFFSET}, and V_{RESET} in any order, provided that the maximum delta-voltage between V_{BIAS} and V_{OFFSET} is not exceeded (see *Absolute Maximum Ratings* for details).

NOTE

During the power-up procedure, the DMD LVCMOS inputs should not be driven high until after step 2 is complete.

NOTE

Power supply slew rates during power up are unrestricted, provided that all other conditions are met.

9.3 DMD Power Supply Power-Down Procedure

1. Command the chipset controller to execute a mirror-parking sequence. See the controller data sheet (listed in *Related Documentation*) for details.
2. Power down V_{BIAS}, V_{OFFSET}, and V_{RESET} in any order, provided that the maximum delta voltage between V_{BIAS} and V_{OFFSET} is not exceeded (see *Absolute Maximum Ratings* for details).
3. Wait for V_{BIAS}, V_{OFFSET}, and V_{RESET} to each discharge to a stable level within 4 V of the reference ground.
4. Power down V_{CC} and V_{REF} in any order.

NOTE

During the power-down procedure, the DMD LVCMOS inputs should be held at a level less than V_{REF} + 0.3 V.

NOTE

Power-supply slew rates during power down are unrestricted, provided that all other conditions are met.

Copyright © 2013–2018, Texas Instruments Incorporated

DMD Power Supply Power-Down Procedure (continued)

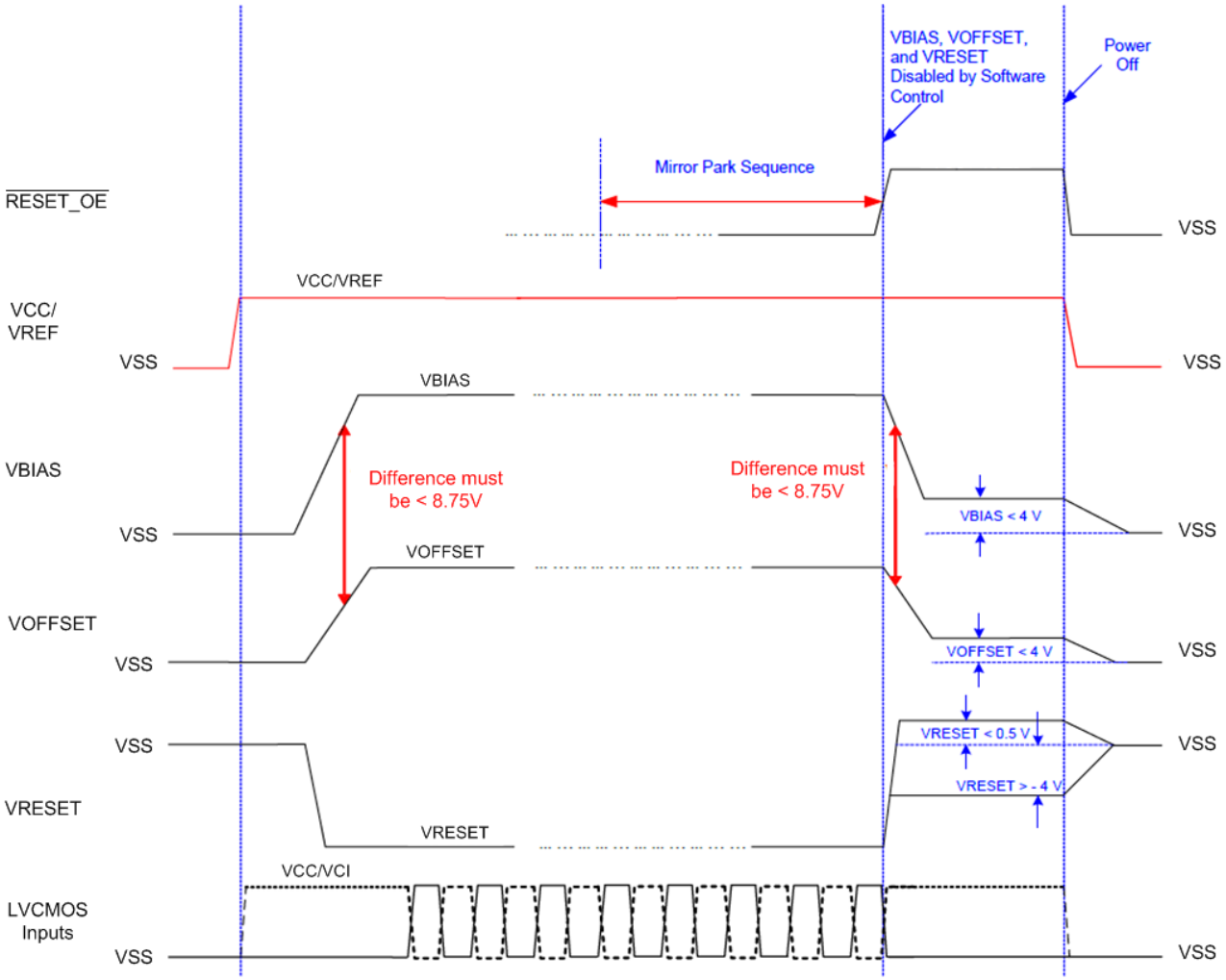

Figure 12. Power-Up and Power-Down Timing

10 Layout

10.1 Layout Guidelines

10.1.1 DMD Interface Design Considerations

The DMD interface is modeled after the low-power DDR-memory (LPDDR) interface. To minimize power dissipation, the LPDDR interface is defined to be unterminated. As a result, PCB signal-integrity management is imperative. Impedance control and crosstalk mitigation is critical to robust operation. LPDDR board design recommendations include trace spacing that is three times the trace width, impedance control within 10%, and signal routing directly over a neighboring reference plane (ground or 1.9-V plane).

DMD interface performance is also a function of trace length; therefore the length of the trace limits performance. The DLPC350 controller only works over a narrow range of DMD signal routing lengths at 120 MHz. Ensuring positive timing margins requires attention to many factors.

As an example, the DMD interface system timing margin can be calculated as follows.

Setup Margin = (DLPC350 Output Setup) – (DMD Input Setup) – (PCB Routing Mismatch) – (PCB SI Degradation) (7)

Hold-Time Margin = (DLPC350 Output Hold) – (DMD Input Hold) – (PCB Routing Mismatch) – (PCB SI Degradation) (8)

PCB signal integrity degradation can be minimized by reducing the affects of simultaneously switching output (SSO) noise, crosstalk, and inter-symbol interface (ISI). Additionally, PCB routing mismatch can be budgeted via controlled PCB routing.

In an attempt to minimize the need for signal integrity analysis that would otherwise be required, the following PCB design guidelines are provided. They describe an interconnect system that satisfies both waveform quality and timing requirements (accounting for both PCB routing mismatch and PCB SI degradation). Variation from these recommendations may also work, but should be confirmed with PCB signal integrity analysis or lab measurements.

10.1.2 DMD Termination Requirements

Table 11 lists the termination requirements for the DMD interface. These series resistors should be placed as close to the DLPC350 pins as possible while following all PCB guidelines.

Table 11. Termination Requirements for DMD Interface

SIGNALS	SYSTEM TERMINATION
DMD_D(23:0), DMD_TRC, DMD_SCTRL, DMD_LOADB, DMD_DRC_STRB, DMD_DRC_BUS, DMD_SAC_CLK, and DMD_SAC_BUS	External 5-Ω series termination at the transmitter
DMD_DCLK	External 5-Ω series termination at the transmitter
DMD_DRC_OE	External 0-Ω series termination. This signal must be externally pulled-up to VDD_DMD via a 30-kΩ to 51-kΩ resistor

Copyright © 2013–2018, Texas Instruments Incorporated

DMD_CLK and DMD_SAC_CLK clocks should be equal lengths, as shown in Figure 13.

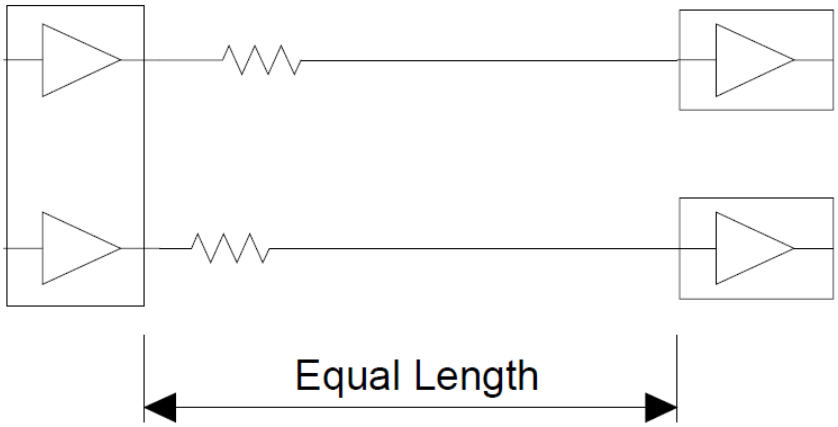

Figure 13. Series-Terminated Clocks

10.1.3 Decoupling Capacitors

The decoupling capacitors should be given placement priority. The supply voltage pin of the capacitor should be located close to the DLPC350 supply voltage pin or pins. Decoupling capacitors should have two vias connecting the capacitor to ground and two vias connecting the capacitor to the power plane, but if the trace length is less than 0.05 inches, the device can be connected directly to the decoupling capacitor. The vias should be located on opposite sides of the long side of the capacitor, and those connections should be less than 0.05 inches as well.

10.1.4 Power Plane Recommendations

For best performance, TI recommends the following:

- Two power planes
  - One solid plane for ground (GND)
  - One split plane for other voltages with no signal routing on the power planes
- Power and ground pins should be connected to these planes through a via for each pin.
- All device pin and via connections to these planes should use a thermal relief with a minimum of four spokes.
- Trace lengths for the component power and ground pins should be minimized to 0.03 inches or less.
- Vias should be spaced out to avoid forming slots on the power planes.
- High speed signals should not cross over a slot in the adjacent power planes.
- Vias connecting all the digital layers should be placed around the edge of the rigid PCB regions 0.03 inches from the board edges with 0.1 inch spacing prior to routing.
- Placing extra vias is not required if there are sufficient ground vias due to normal ground connections of devices.
- All signal routing and signal vias should be inside the perimeter ring of ground vias.

10.1.5 Signal Layer Recommendations

The PCB signal layers should follow typical good practice guidelines including:

- Layer changes should be minimized for single-ended signals.
- Individual differential pairs can be routed on different layers, but the signals of a given pair should not change layers.
- Stubs should be avoided.
- Only voltage or low-frequency signals should be routed on the outer layers, except as noted previously in this document.
- Double data rate signals should be routed first for best impedance and trace length matching.

The PCB should have a solder mask on the top and bottom layers. The mask should not cover the vias.

Copyright © 2013–2018, Texas Instruments Incorporated

- Except for fine pitch devices (pitch ≤ 0.032 inches), the copper pads and the solder mask cutout should be of the same size.
- Solder mask between pads of fine pitch devices should be removed.
- In the BGA package, the copper pads and the solder mask cutout should be of the same size.

10.1.6 General Handling Guidelines for CMOS-Type Pins

To avoid potentially damaging current caused by floating CMOS input-only pins, TI recommends that unused input pins be tied through a pullup resistor to its associated power supply, or a pulldown to ground. For inputs with internal pullup or pulldown resistors, adding an external pullup or pulldown resistor is unnecessary unless specified in the Pin Configuration and Functions section. Note that internal pullup and pulldown resistors are weak and should not be expected to drive an external line.

After power-up or device reset, bidirectional pins are configured as inputs as a reset default until directed otherwise.

Unused output-only pins can be left open.

10.1.7 PCB Manufacturing

The DLPC350 Controller and DMD are a high-performance (high-frequency and high-bandwidth) set of components. This section provides PCB guidelines to help ensure proper operation of these components.

The DLPC350 controller board will be a multi-layer PCB with surface mount components on both sides. The majority of large surface mount components are placed on the top side of the PCB. Circuitry is high speed digital logic. The high speed interfaces include:

- 120-MHz DDR interface from DLPC350 to DMD
- 150-MHz LVTTL interface from a video decoder to the DLPC350
- 150-MHz pixel clock supporting 30-bit parallel RGB interface
- LVTTL parallel memory interface between the DLPC350 controller and flash with 70-ns access time
- LVDS flat panel display port to DLPC350

The PCB should be designed to IPC2221 and IPC2222, Class 2, Type Z, at level B producibility and built to IPC6011 and IPC6012, Class 2.

10.1.7.1 General Guidelines

Table 12. PCB General Recommendations

DESCRIPTION	RECOMMENDATION
Configuration	Asymmetric dual stripline
Etch thickness (T)	1.0-oz. (1.2-mil thick) copper
Single-ended signal impedance	50 Ω (±10%)
Differential signal impedance	100 Ω differential (±10%)

10.1.7.2 Trace Widths and Minimum Spacings

For best performance, TI recommends the trace widths and minimum spacings shown in Table 13.

Table 13. Trace Widths and Minimum Spacings

SIGNAL NAME	TRACE WIDTH (inches)	MINIMUM TRACE SPACING (inches)
P1P2, P1P2V_PLLM, P1P2V_PLLD, P2P5V, P3P3V, P1P9V, A1P8V, A1P8V_PLLD, A1P8V_PLLM	0.02	0.010
VRST, VBIAS, VOFFSET	0.02	0.010
VSS (GND)	0.02	0.005
FANx_OUT	0.02	0.020
DMD_DCLK		0.030
P1A_CLK, P1B_CLK, P1C_CLK		0.030

Copyright © 2013–2018, Texas Instruments Incorporated

Table 13. Trace Widths and Minimum Spacings (continued)

SIGNAL NAME	TRACE WIDTH (inches)	MINIMUM TRACE SPACING (inches)
MOSC, MOSCN		0.030

10.1.7.3 Routing Constraints

In order to meet the specifications listed in the following tables, typically the PCB designer must route these signals manually (not using automated PCB routing software). In case of length matching requirements, routing traces in a serpentine fashion may be required. Keep the number of turns to a minimum and the turn angles no sharper than 45°. Traces must be 0.1 inches from board edges when possible; otherwise they must be 0.05 inches minimum from the board edges. Avoid routing long traces all around the PCB. PCB layout assumes adjacent trace spacing is twice the trace width. However, three times the trace width will reduce crosstalk and significantly help performance.

The maximum and minimum signal routing trace lengths include escape routing.

Table 14. Signal Length Routing Constraints for DMD Interface

SIGNALS	MINIMUM SIGNAL ROUTING LENGTH(1)	MAXIMUM SIGNAL ROUTING LENGTH(2)
DMD_D(23:0), DMD_DCLK, DMD_TRC, DMD_SCTRL, DMD_LOADB,	2480 mil (63 mm)	2953 mil (75 mm)
DMD_OE, DMD_DRC_STRB, DMD_DRC_BUS, DMD_SAC_CLK, and DMD_SAC_BUS	512 mil (13 mm)	5906 mil (150 mm)

(1) Signal lengths below the stated minimum will likely result in overshoot or undershoot.
(2) DMD-DDR maximum signal length is a function of the DMD_DCLK rate.

Each high-speed, single-ended signal should be routed in relation to its reference signal, such that a constant impedance is maintained throughout the routed trace. Avoid sharp turns and layer switching while keeping total trace lengths to a minimum. The following signals should follow the signal matching requirements described in Table 15.

Table 15. High-Speed Signal Matching Requirements for DMD Interface

SIGNALS	REFERENCE SIGNAL	MAX MISMATCH	UNIT
DMD_D(23:0), DMD_TRC, DMD_SCTRL, DMD_LOADB	DMD_DCLK	±200 (±5.08)	mil (mm)
DMD_DRC_STRB, DMD_DRC_BUS, DMD_SAC_BUS, DMD_OE	DMD_SAC_CLK	±200 (±5.08)	mil (mm)

The values in Table 15 apply to the PCB routing only. They do not include any internal package routing mismatch associated with the DLPC350 or DMD. Additional margin can be attained if internal DLPC350 package skew is taken into account. Additionally, to minimize EMI radiation, serpentine routes added to facilitate trace length matching should only be implemented on signal layers *between* reference planes.

Both the DLPC350 output timing parameters and the DMD input timing parameters include a timing budget to account for their respective internal package routing skew. Thus, additional system margin can be attained by comprehending the package variations and compensating for them in the PCB layout. To increase the system timing margin, TI recommends that the DLPC350 package variation be compensated for (by signal group), but it may not be desirable to compensate for DMD package skew. This is due to the fact that each DMD has a different skew profile, making the PCB layout DMD specific. To use a common PCB design for different DMDs, TI recommends that either the DMD package skew variation not be compensated for on the PCB, or the package lengths for all applicable DMDs being considered. Table 16 provides the DLPC350 package output delay at the package ball for each DMD interface signal.

The total length of all the traces in Table 16 should be matched to the DMD_DCLK trace length. Total trace length includes package skews, PCB length, and DMD flex cable length.

Copyright © 2013–2018, Texas Instruments Incorporated

Table 16. DLPC350 Package Skew and Routing Trace Length for the DMD Interface

SIGNAL	TOTAL DELAY (Package Skews)		PACKAGE PIN
	(ps)	(mil)	
DMD_D0	25.9	152.35	A8
DMD_D1	19.6	115.29	B8
DMD_D2	13.4	78.82	C8
DMD_D3	7.4	43.53	D8
DMD_D4	18.1	106.47	B11
DMD_D5	11.1	65.29	C11
DMD_D6	4.4	25.88	D11
DMD_D7	0.0	0.00	E11
DMD_D8	14.8	87.06	C7
DMD_D9	18.4	108.24	B10
DMD_D10	6.4	37.65	E7
DMD_D11	4.8	28.24	D10
DMD_D12	29.8	175.29	A6
DMD_D13	25.7	151.18	A12
DMD_D14	19.0	111.76	B12
DMD_D15	11.7	68.82	C12
DMD_D16	4.7	27.65	D12
DMD_D17	21.5	126.47	B7
DMD_D18	24.8	145.88	A10
DMD_D19	8.3	48.82	D7
DMD_D20	23.9	140.59	B6
DMD_D21	1.6	9.41	E9
DMD_D22	10.7	62.94	C10
DMD_D23	16.7	98.24	C6
DMD_DCLK	24.8	145.88	A9
$\overline{\text{DMD_LOADB}}$	18.0	105.88	B9
DMD_SCTRL	11.4	67.06	C9
DMD_TRC	4.6	27.06	D9

Table 17. Routing Priority

SIGNAL	ROUTING PRIORITY	ROUTING LAYER	MATCHING REFERENCE SIGNAL	TOLERANCE
DMD_DCLK(1) (2) (3)	1	3	–	–
DMD_D[23:0], DMD_SCTRL, DMD_TRC, DMD_LOADB(1) (2) (3) (4)	1	3, 4	DMD_DCLK	±150 mils
P1_A[9:0], P1_B[9:0], P1_C[9:0], P1_HSYNC, P1_VSYNC, P1_DATAEN, P1X_CLK	1	3, 4	P1X_CLK	±0.1 inches
R[A-E]_IN_P, R[A-E]_IN_N, RCK_IN_P, RCK_IN_N	2	3, 4	RCK	±150 mils Differential signals need to be matched within ±12 mils

(1) Total signal length from the DLPC350 and the DMD, including flex cable traces and PCB signal trace lengths must be held to the lengths specified in Table 14.
(2) Switching routing layers is not permitted except at the beginning and end of a trace.
(3) Minimize vias on DMD traces.
(4) Matching includes PCB trace length plus the DLPC350 package length plus the DMD flex cable length.

Copyright © 2013–2018, Texas Instruments Incorporated

10.1.7.4 Fiducials

Fiducials for automatic component insertion should be 0.05 inch diameter copper with a 0.1-inch cutout (antipad). Fiducials for optical auto insertion are placed on three corners of both sides of the PCB.

10.1.7.5 Flex Considerations

Table 18 shows the general DMD flex design recommendations. Table 19 lists the minimum flex design requirements.

Table 18. Flex General Recommendations

DESCRIPTION	RECOMMENDATION
Configuration	Two-layer micro strip
Reference plane 1	Ground plan for proper return
Vias	Maximum two per signal
Single trace width	4-mil minimum
Etch thickness (T)	0.5-oz. (0.6 mil thick) copper
Single-ended signal impedance	50 Ω (± 10%)

Table 19. Minimum Flex Design Requirements

PARAMETER	APPLICATION	SINGLE-ENDED SIGNALS	UNIT
Line width (W)(1)	Escape routing in ball field	4 (0.1)	mil (mm)
	PCB etch data and control	5 (0.13)	mil (mm)
	PCB etch clocks	7 (0.18)	mil (mm)
Minimum line spacing to other signals (S)	Escape routing in ball field	4 (0.1)	mil (mm)
	PCB etch data and control	2x the line width(2)	mil (mm)
	PCB etch clocks	3x the line width	mil (mm)

(1) Line width is expected to be adjusted to achieve impedance requirements.
(2) Three times the line spacing is recommended for all signals to help achieve the desired signal integrity.

10.1.7.6 DLPC350 Thermal Considerations

The underlying thermal limitation for the DLPC350 controller is that the maximum operating junction temperature (T_J) must not be exceeded (see *Recommended Operating Conditions* in *Specifications*). This temperature is dependent on operating ambient temperature, airflow, PCB design (including the component layout density and the amount of copper used), power dissipation of the DLPC350 controller, and power dissipation of surrounding components. The DLPC350 package is designed to extract heat through the power and ground planes of the PCB, thus copper content and airflow over the PCB are important factors.

10.2 Layout Example

10.2.1 Printed Circuit Board Layer Stackup Geometry

The DLPC350 PCB is targeted at six layers with layer stack up shown in Figure 14. The PCB layer stack may vary depending on system design. However, careful attention is required to meet design considerations. Layers one and six should consist of the components layers. Low-speed routing and power splits are allowed on these layers. Layer two should consist of a solid ground plane. Layer five should be a split voltage plane. Layers three and four should be used as the primary routing layers. Routing on external layers should be less than 0.25 inches for priority one and two signals. Refer to Table 17 for signal priority groups.

Board material should be FR-370HR or similar. PCB should be designed for lead-free assembly with the stackup geometry shown in Figure 14.

Copyright © 2013–2018, Texas Instruments Incorporated

Layout Example (continued)

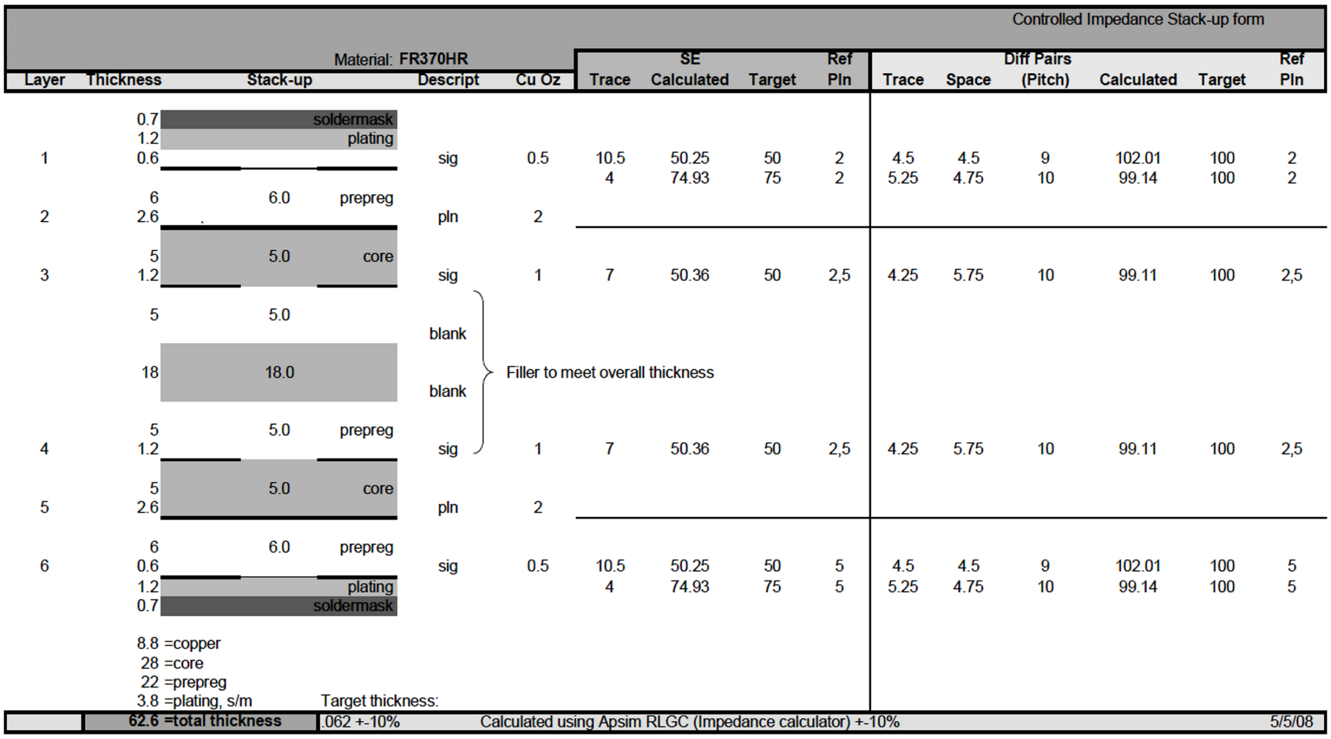

Figure 14. Layer Stackup

Table 20. PCB Layer Stackup Geometry

PARAMETER	DESCRIPTION	RECOMMENDATION
Reference plane 1	Ground plane for proper return	
Reference plane 2	1.9-V DMD I/O power plane or ground	
Er	Dielectric FR4	4.3 at 1 GHz (nominal)
H1	Signal trace distance to reference plane 1	5 mil (0.127 mm)
H2	Signal trace distance to reference plane 2	30.4 mil

10.2.2 Recommended DLPC350 MOSC Crystal Oscillator Configuration

The DLPC350 controller requires an external reference clock to feed its internal PLL. This reference may be supplied via a crystal or oscillator. The DLPC350 controller accepts a reference clock of 32 MHz with a maximum frequency variation of 100 ppm (including aging, temperature, and trim component variation). When a crystal is used, several discrete components are also required, as shown in Figure 15.

Copyright © 2013–2018, Texas Instruments Incorporated

C_L = Crystal load capacitance (Farads)
$C_{L1} = 2 * (C_L - C_{Stray\text{-}MOSC})$
$C_{L2} = 2 * (C_L - C_{Stray\text{-}MOSCN})$
$C_{Stray\text{-}MOSC}$ = Sum of Package & PCB capacitance at the crystal pin associated with ASIC signal MOSC.
$C_{Stray\text{-}MOSCN}$ = Sum of Package & PCB capacitance at the crystal pin associated with ASIC signal MOSCN.

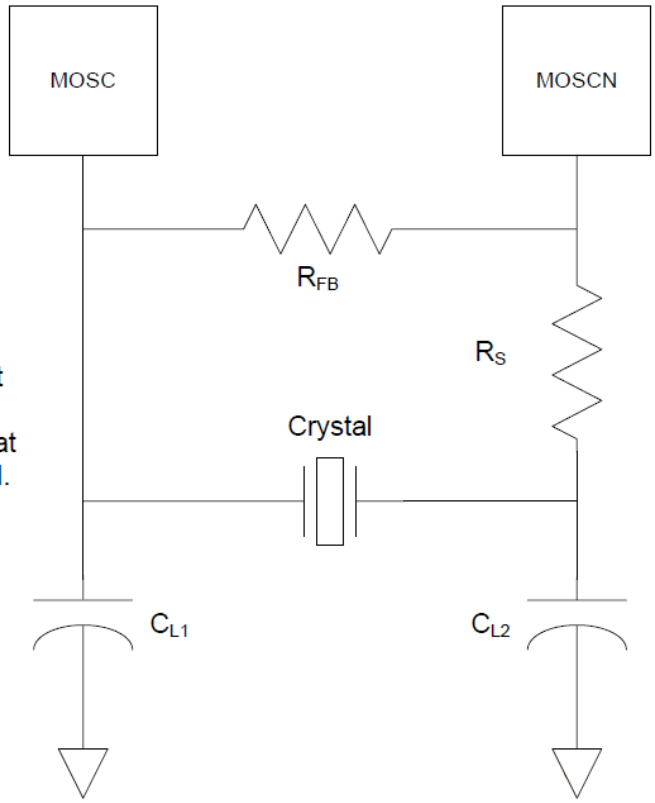

Figure 15. Recommended Crystal Oscillator Configuration

Table 21. Crystal Port Electrical Characteristics

PARAMETER	NOM	UNIT
MOSC to GND capacitance	3.9	pF
MOSCN to GND capacitance	3.8	pF

Table 22. Recommended Crystal Configuration

PARAMETER	RECOMMENDED	UNIT
Crystal circuit configuration	Parallel resonant	
Crystal type	Fundamental (first harmonic)	
Crystal nominal frequency	32	MHz
Crystal frequency tolerance (including accuracy, temperature, aging and trim sensitivity)	±100	PPM
Crystal equivalent series resistance (ESR)	50 max	Ω
Crystal load	10	pF
Crystal shunt load	7 max	pF
Crystal frequency temperature stability	±30	PPM
R_S drive resistor (nominal)	100	Ω
R_{FB} feedback resistor (nominal)	1	MΩ
C_{L1} external crystal load capacitor (MOSC)	Typical drive level with TCX9C3207001 crystal (ESRmax = 30 Ω) = 160 µW. See Figure 15	pF

Copyright © 2013–2018, Texas Instruments Incorporated

Table 22. Recommended Crystal Configuration (continued)

PARAMETER	RECOMMENDED	UNIT
C_{L2} external crystal load capacitor (MOSCN)	Typical drive level with TCX9C3207001 crystal (ESRmax = 30 Ω) = 160 µW. See Figure 15	pF
PCB layout	A ground isolation ring around the crystal	

If an external oscillator is used, then the oscillator output must drive the MOSC pin on the DLPC350 controller, and the MOSCN pin should be left unconnected. Note that the DLPC350 controller can only accept a triangular waveform.

Similar to the crystal option, the oscillator input frequency is limited to 32 MHz.

It is assumed that the external crystal or oscillator stabilizes within 50 ms after stable power is applied.

10.2.3 Recommended DLPC350 PLL Layout Configuration

High-frequency decoupling is required for both 1.2-V and 1.8-V PLL supplies and should be provided as close as possible to each of the PLL supply package pins as shown in the example layout in Figure 16. TI recommends that decoupling capacitors be placed under the package on the opposite side of the board. High quality, low-ESR, monolithic, surface mount capacitors should be used. Typically 0.1 µF for each PLL supply should be sufficient. The length of a connecting trace increases the parasitic inductance of the mounting and thus, where possible, there should be no trace, allowing the via to butt up against the land itself. Additionally, the connecting trace should be made as wide as possible. Further improvement can be made by placing vias to the side of the capacitor lands or doubling the number of vias.

The location of bulk decoupling depends on the system design. Typically, a good ceramic capacitor in the 10-µF range is adequate.

Copyright © 2013–2018, Texas Instruments Incorporated

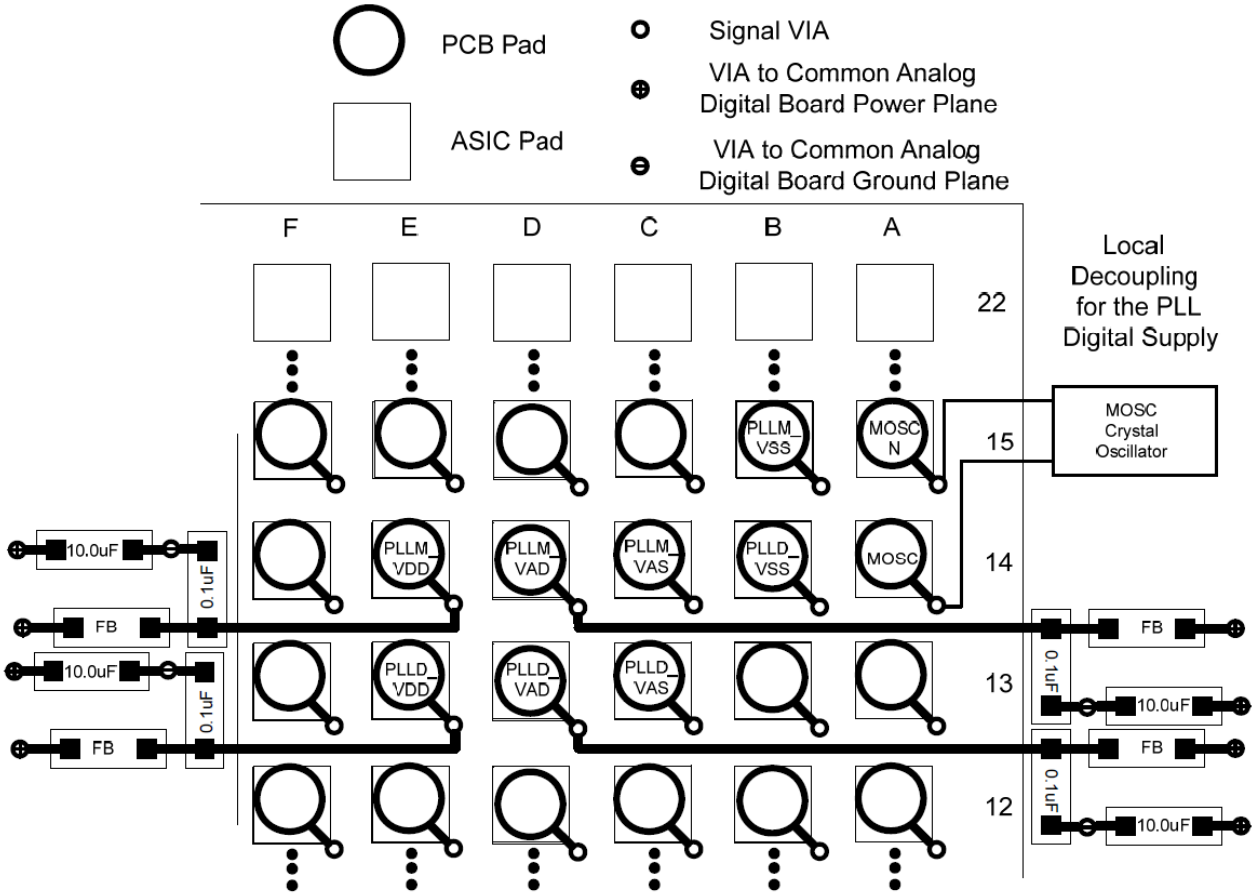

Figure 16. PLL Filter Layout

11 Device and Documentation Support

11.1 Device Support

11.1.1 Device Nomenclature

Figure 17 provides a legend for reading the complete device name for any DLP device.

Table 23. Package-Specific Information

PACKAGE TYPE	PACKAGE DRAWING	BODY SIZE	CONNECTOR
LCCC	FQE	9.1 mm x 20.7 mm	Panasonic AXT580124
LCCC	FQD	9.1 mm x 20.7 mm	Neoconix FBX0040CMFF6AU00

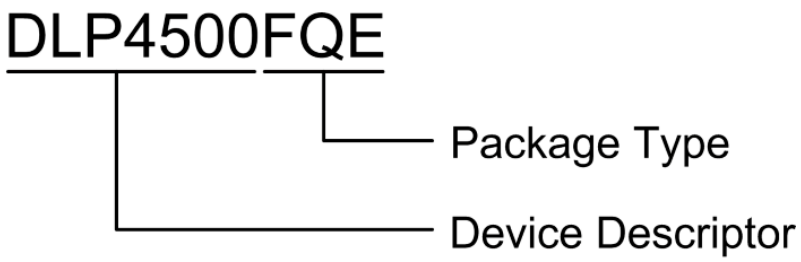

Figure 17. Device Nomenclature

11.1.2 Device Markings

The device marking consists of the fields shown in Figure 18.

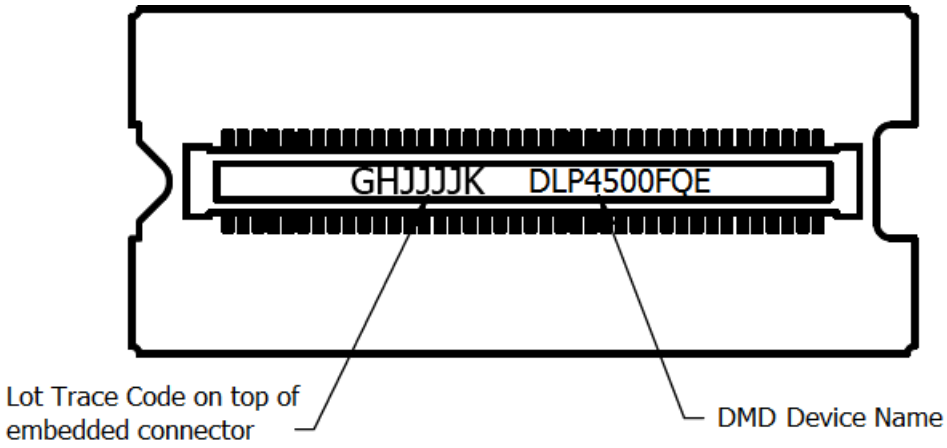

Figure 18. Device Marking for FQE

Copyright © 2013–2018, Texas Instruments Incorporated

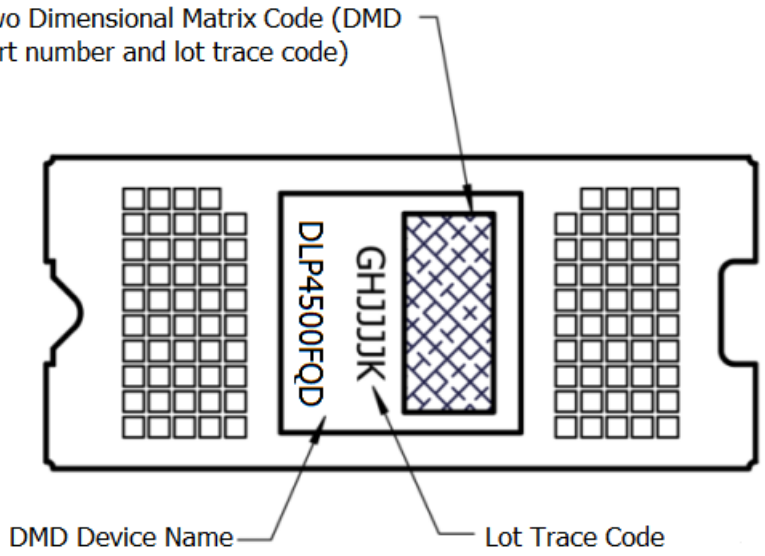

Figure 19. Device Marking for FQD

11.2 Documentation Support

11.2.1 Related Documentation

The following documents contain additional information related to the use of the DLP4500 device:

Table 24. Related Documents

DOCUMENT	
DLPC350 Digital Controller data sheet	DLPS029
DLPC350 Software Programmer's Guide	DLPU010
Geometric Optics Application Note	DLPA044

11.3 Community Resources

The following links connect to TI community resources. Linked contents are provided "AS IS" by the respective contributors. They do not constitute TI specifications and do not necessarily reflect TI's views; see TI's Terms of Use.

TI E2E™ Online Community ***TI's Engineer-to-Engineer (E2E) Community.*** Created to foster collaboration among engineers. At e2e.ti.com, you can ask questions, share knowledge, explore ideas and help solve problems with fellow engineers.

Design Support ***TI's Design Support*** Quickly find helpful E2E forums along with design support tools and contact information for technical support.

11.4 Trademarks

E2E is a trademark of Texas Instruments.
All other trademarks are the property of their respective owners.

11.5 Electrostatic Discharge Caution

These devices have limited built-in ESD protection. The leads should be shorted together or the device placed in conductive foam during storage or handling to prevent electrostatic damage to the MOS gates.

Copyright © 2013–2018, Texas Instruments Incorporated

11.6 Glossary

SLYZ022 — *TI Glossary*.

This glossary lists and explains terms, acronyms, and definitions.

12 Mechanical, Packaging, and Orderable Information

The following pages include mechanical, packaging, and orderable information. This information is the most current data available for the designated devices. This data is subject to change without notice and revision of this document. For browser-based versions of this data sheet, refer to the left-hand navigation.

Copyright © 2013–2018, Texas Instruments Incorporated

PACKAGING INFORMATION

Orderable Device	Status (1)	Package Type	Package Drawing	Pins	Package Qty	Eco Plan (2)	Lead/Ball Finish (6)	MSL Peak Temp (3)	Op Temp (°C)	Device Marking (4/5)	Samples
DLP4500FQD	ACTIVE	CLGA	FQD	98	5	RoHS & Green	Call TI	Level-1-NC-NC			Samples
DLP4500FQE	ACTIVE	CLGA	FQE	80	80	RoHS & Green	Call TI	Level-1-NC-NC			Samples

(1) The marketing status values are defined as follows:
ACTIVE: Product device recommended for new designs.
LIFEBUY: TI has announced that the device will be discontinued, and a lifetime-buy period is in effect.
NRND: Not recommended for new designs. Device is in production to support existing customers, but TI does not recommend using this part in a new design.
PREVIEW: Device has been announced but is not in production. Samples may or may not be available.
OBSOLETE: TI has discontinued the production of the device.

(2) **RoHS:** TI defines "RoHS" to mean semiconductor products that are compliant with the current EU RoHS requirements for all 10 RoHS substances, including the requirement that RoHS substance do not exceed 0.1% by weight in homogeneous materials. Where designed to be soldered at high temperatures, "RoHS" products are suitable for use in specified lead-free processes. TI may reference these types of products as "Pb-Free".
RoHS Exempt: TI defines "RoHS Exempt" to mean products that contain lead but are compliant with EU RoHS pursuant to a specific EU RoHS exemption.
Green: TI defines "Green" to mean the content of Chlorine (Cl) and Bromine (Br) based flame retardants meet JS709B low halogen requirements of <=1000ppm threshold. Antimony trioxide based flame retardants must also meet the <=1000ppm threshold requirement.

(3) MSL, Peak Temp. - The Moisture Sensitivity Level rating according to the JEDEC industry standard classifications, and peak solder temperature.

(4) There may be additional marking, which relates to the logo, the lot trace code information, or the environmental category on the device.

(5) Multiple Device Markings will be inside parentheses. Only one Device Marking contained in parentheses and separated by a "~" will appear on a device. If a line is indented then it is a continuation of the previous line and the two combined represent the entire Device Marking for that device.

(6) Lead/Ball Finish - Orderable Devices may have multiple material finish options. Finish options are separated by a vertical ruled line. Lead/Ball Finish values may wrap to two lines if the finish value exceeds the maximum column width.

Important Information and Disclaimer: The information provided on this page represents TI's knowledge and belief as of the date that it is provided. TI bases its knowledge and belief on information provided by third parties, and makes no representation or warranty as to the accuracy of such information. Efforts are underway to better integrate information from third parties. TI has taken and continues to take reasonable steps to provide representative and accurate information but may not have conducted destructive testing or chemical analysis on incoming materials and chemicals. TI and TI suppliers consider certain information to be proprietary, and thus CAS numbers and other limited information may not be available for release.

In no event shall TI's liability arising out of such information exceed the total purchase price of the TI part(s) at issue in this document sold by TI to Customer on an annual basis.

© COPYRIGHT 2010 TEXAS INSTRUMENTS
UN-PUBLISHED, ALL RIGHTS RESERVED.

REVISIONS

REV	DESCRIPTION	DATE	BY
A	ECO 2104138 INITIAL RELEASE	01/20/2010	J. HOLM
B	ECO 2121955 CORRECT APERTURE X DIMENSIONS VIEW D	1/23/2012	BMH
C	ECO 2144971 ADD (FQD PACKAGE) TO TITLE	9/11/2014	MAA

NOTES UNLESS OTHERWISE SPECIFIED:

1. DIE PARALLELISM TOLERANCE APPLIES TO DMD ACTIVE ARRAY ONLY.
2. ROTATION ANGLE OF DMD ACTIVE ARRAY IS A REFINEMENT OF THE LOCATION TOLERANCE AND HAS A MAXIMUM ALLOWED VALUE OF 0.6 DEGREES.
3. BOUNDARY MIRRORS SURROUNDING THE DMD ACTIVE ARRAY.
4. DMD MARKING TO APPEAR ON SYMBOLIZATION PAD.
5. NOTCH DIMENSIONS ARE DEFINED BY UPPERMOST LAYERS OF CERAMIC, AS SHOWN IN SECTION A-A.
6. ENCAPSULANT TO BE CONTAINED WITHIN DIMENSIONS SHOWN IN VIEWS C AND D (SHEET 2).
7. WHILE ONLY THE THREE DATUM A TARGET AREAS A1, A2, AND A3 ARE USED FOR MEASUREMENT, ALL 4 CORNERS SHOULD BE CONTACTED, INCLUDING E1, WHEN MOUNTING IN SYSTEM.

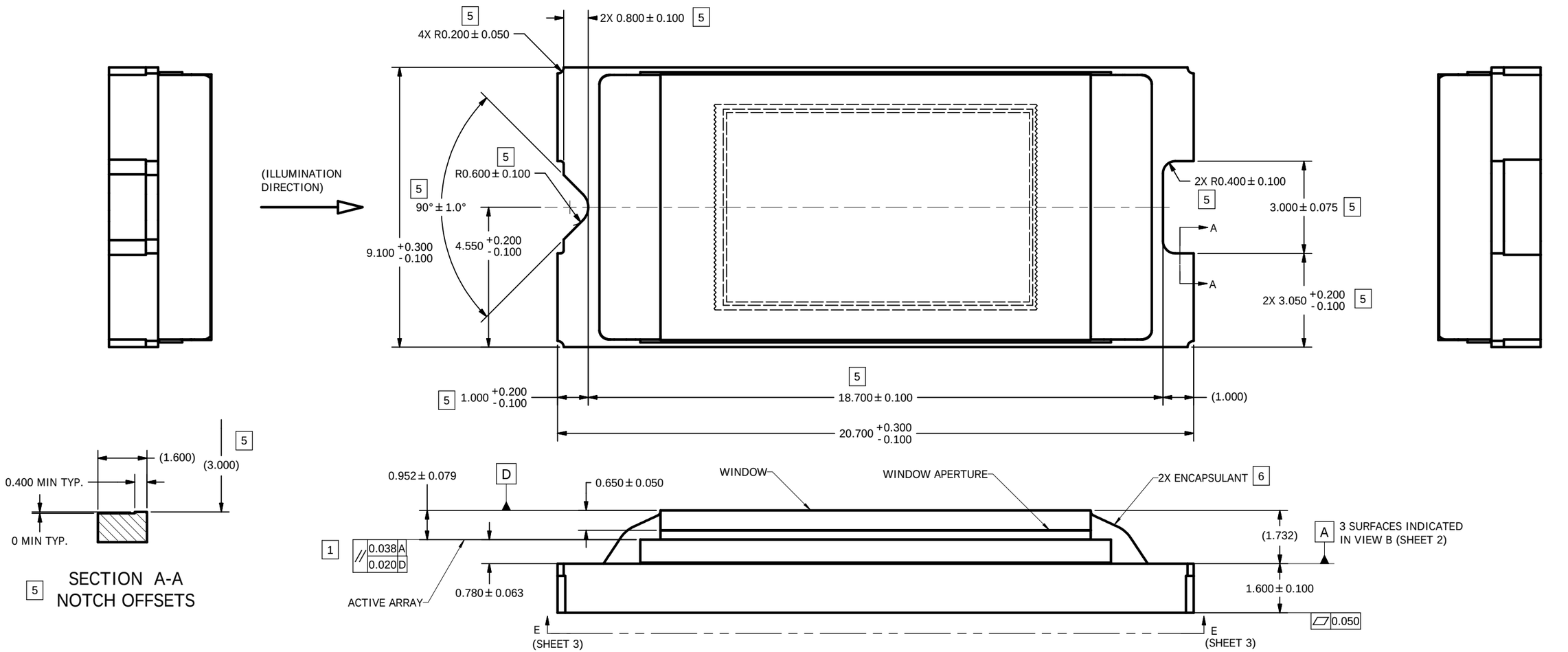

NONE	0314DA
NEXT ASSY	USED ON
APPLICATION	

THIRD ANGLE PROJECTION

UNLESS OTHERWISE SPECIFIED
- DIMENSIONS ARE IN MILLIMETERS
- TOLERANCES:
  - ANGLES ± 1°
  - 2 PLACE DECIMALS ± 0.25
  - 1 PLACE DECIMALS ± 0.50
- DIMENSIONAL LIMITS APPLY BEFORE PROCESSES
- INTERPRET DIMENSIONS IN ACCORDANCE WITH ASME Y14.5M-1994
- REMOVE ALL BURRS AND SHARP EDGES
- PARENTHETICAL INFORMATION FOR REFERENCE ONLY

		DATE
DRAWN	J. HOLM	12/11/2009
ENGINEER	J. HOLM	12/11/2009
QA/CE	P. KONRAD	1/20/2010
CM	F. ARMSTRONG	1/20/2010
	J. HALL	1/20/2010
APPROVED		

TEXAS INSTRUMENTS
Dallas Texas

TITLE
ICD, MECHANICAL, DMD,
.45 WXGA-800 DDR SERIES 310
(FQD PACKAGE)

SIZE	DWG NO	REV
D	2510852	C

SCALE 15:1 SHEET 1 OF 3

INV11-2006a

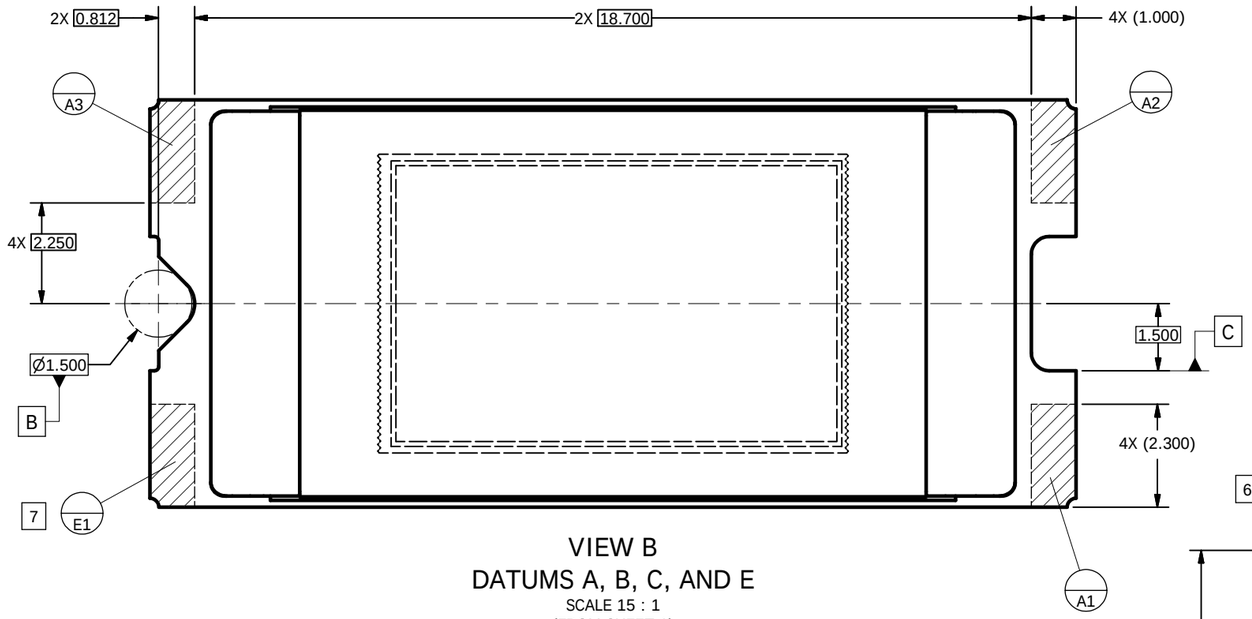

VIEW B
DATUMS A, B, C, AND E
SCALE 15 : 1
(FROM SHEET 1)

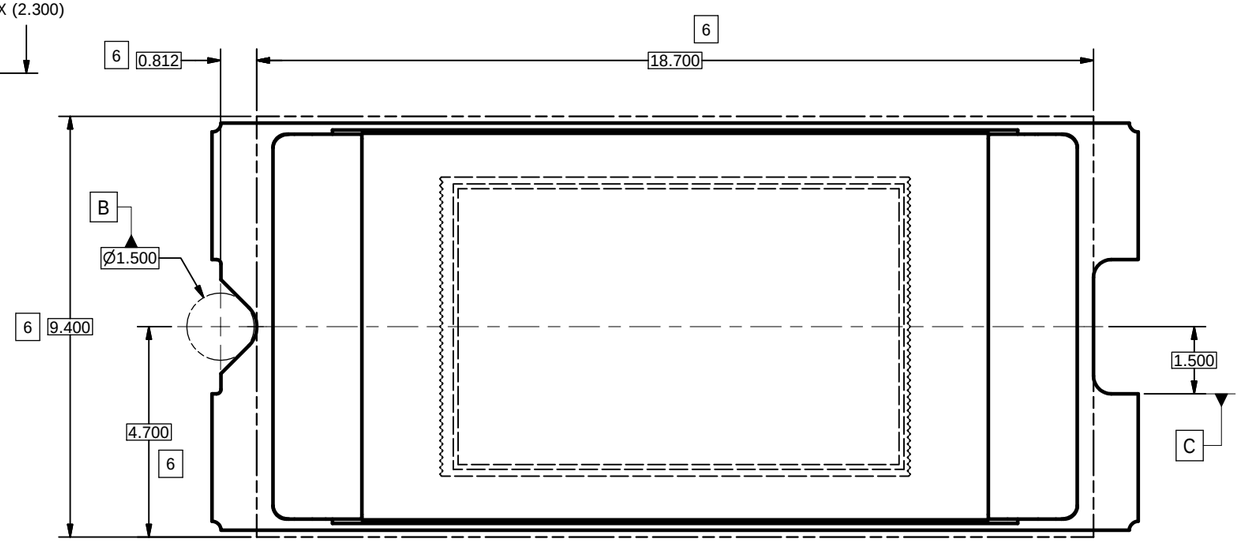

VIEW C
ENCAPSULANT MAXIMUM X/Y DIMENSIONS
SCALE 15 : 1
(FROM SHEET 1)

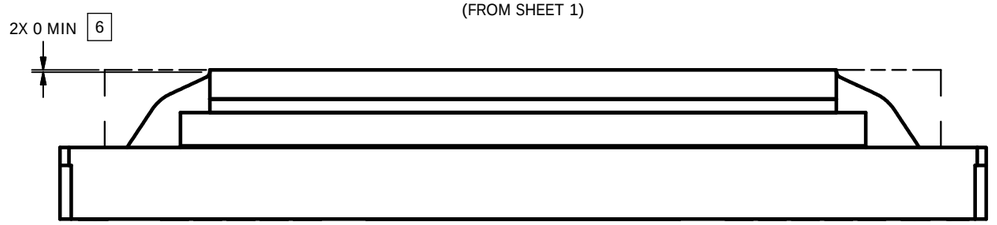

VIEW D
ENCAPSULANT MAXIMUM HEIGHT
SCALE 15 : 1

TEXAS INSTRUMENTS Dallas Texas	DRAWN J. HOLM	DATE 12/11/2009	SIZE D		DWG NO 2510852	REV C
			SCALE		SHEET 2 OF 3	

INV11-2006a

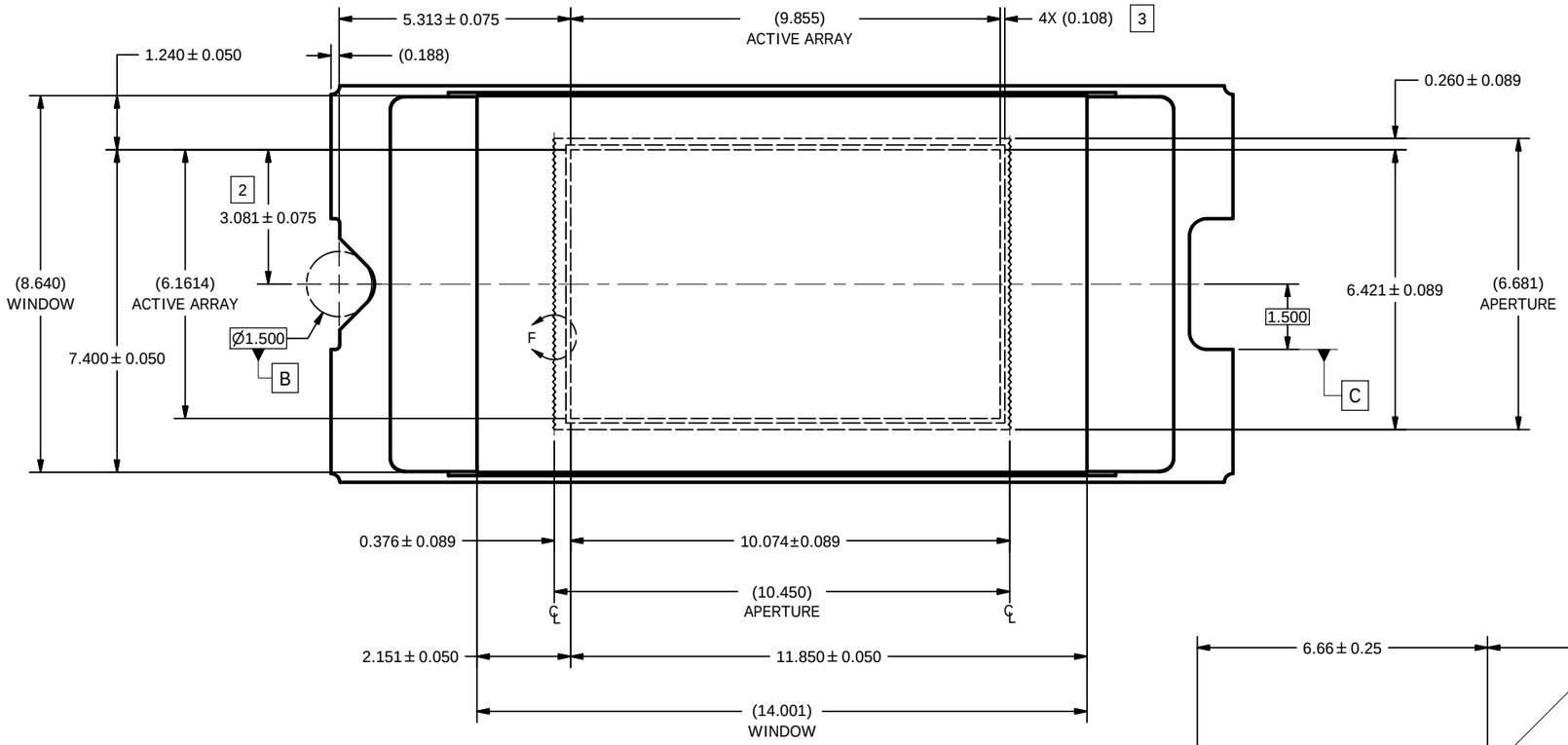

VIEW D
WINDOW AND ACTIVE ARRAY
(FROM SHEET 1)

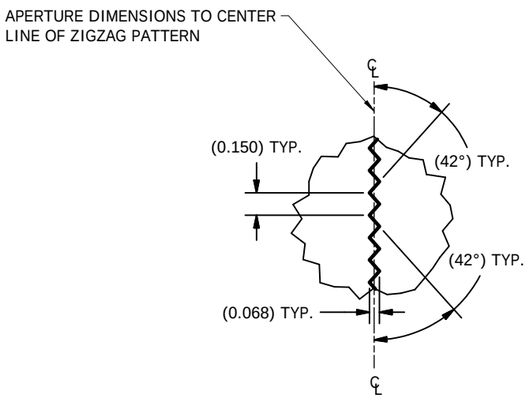

DETAIL F
APERTURE SHORT EDGES
SCALE 50 : 1

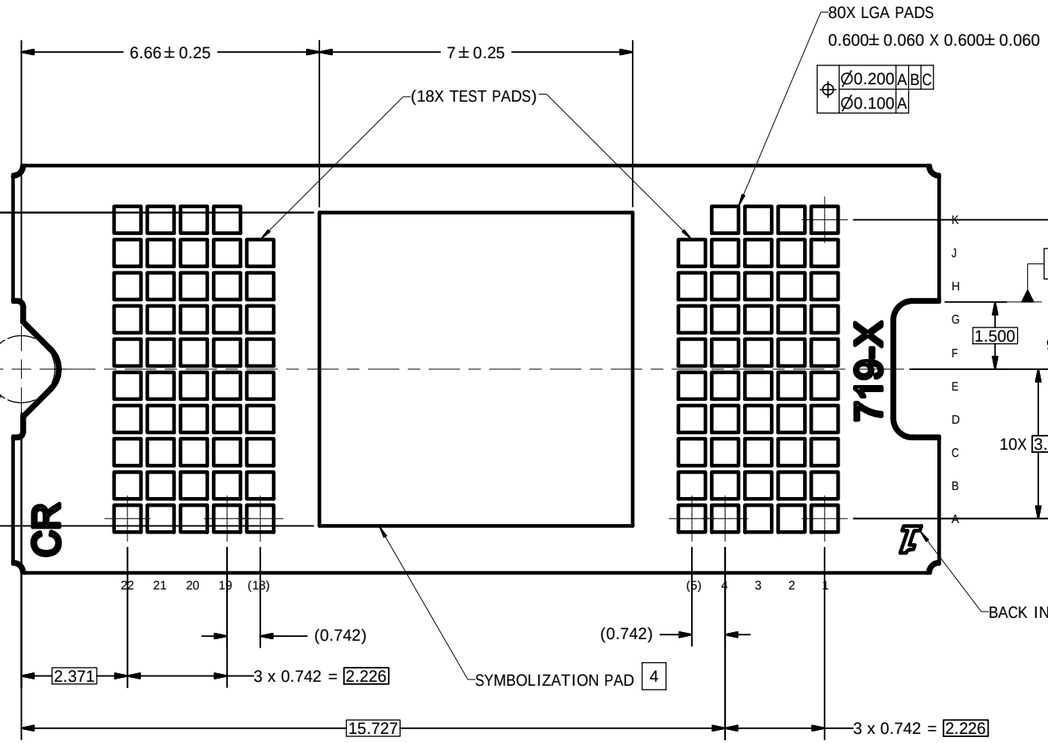

VIEW E-E
BACK SIDE METALLIZATION
(FROM SHEET 1)

TEXAS INSTRUMENTS Dallas Texas	DRAWN J. HOLM	DATE 12/11/2009	SIZE D	DWG NO 2510852	REV C
			SCALE	SHEET 3 OF 3	

INV11-2006a

© COPYRIGHT 2010 TEXAS INSTRUMENTS
UN-PUBLISHED, ALL RIGHTS RESERVED.

REVISIONS

REV	DESCRIPTION	DATE	BY
A	ECO #2109845 - INITIAL RELEASE	8/16/2010	JLH
B	ECO #2121955 - CORRECT APERTURE X DIM'S IN VIEW D	1/23/2012	BMH
C	ECO #2144972 - ADD (FQE PACKAGE) TO TITLE BLOCK	9/11/2014	MAA

NOTES UNLESS OTHERWISE SPECIFIED:

1. DIE PARALLELISM TOLERANCE APPLIES TO DMD ACTIVE ARRAY ONLY.
2. ROTATION ANGLE OF DMD ACTIVE ARRAY IS A REFINEMENT OF THE LOCATION TOLERANCE AND HAS A MAXIMUM ALLOWED VALUE OF 0.6 DEGREES.
3. BOUNDARY MIRRORS SURROUNDING THE DMD ACTIVE ARRAY.
4. DMD MARKING TO APPEAR IN CONNECTOR RECESS.
5. NOTCH DIMENSIONS ARE DEFINED BY UPPERMOST LAYERS OF CERAMIC, AS SHOWN IN SECTION A-A.
6. ENCAPSULANT TO BE CONTAINED WITHIN DIMENSIONS SHOWN IN VIEWS C AND D (SHEET 2). NO ENCAPSULANT IS ALLOWED ON TOP OF THE WINDOW.
7. WHILE ONLY THE THREE DATUM A TARGET AREAS A1, A2, AND A3 ARE USED FOR MEASUREMENT, ALL 4 CORNERS SHOULD BE CONTACTED, INCLUDING E1, WHEN MOUNTING IN SYSTEM.
8. ENCAPSULANT NOT TO EXCEED THE HEIGHT OF THE WINDOW.

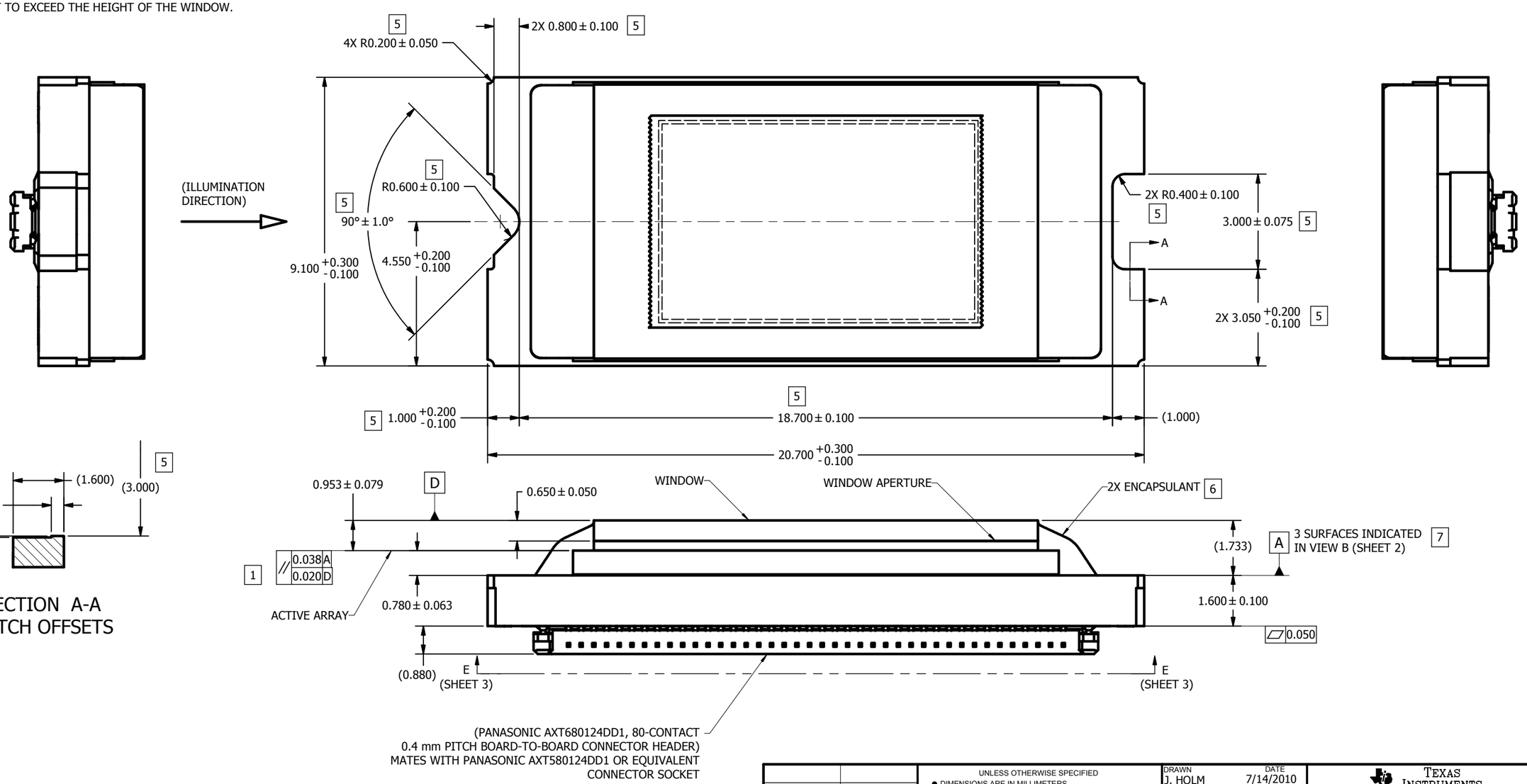

SECTION A-A
NOTCH OFFSETS

NONE	0314DA
NEXT ASSY	USED ON
APPLICATION	

THIRD ANGLE PROJECTION

UNLESS OTHERWISE SPECIFIED
- DIMENSIONS ARE IN MILLIMETERS
- TOLERANCES:
  - ANGLES ± 1°
  - 2 PLACE DECIMALS ± 0.25
  - 1 PLACE DECIMALS ± 0.50
- DIMENSIONAL LIMITS APPLY BEFORE PROCESSES
- INTERPRET DIMENSIONS IN ACCORDANCE WITH ASME Y14.5M-1994
- REMOVE ALL BURRS AND SHARP EDGES
- PARENTHETICAL INFORMATION FOR REFERENCE ONLY

		DATE
DRAWN	J. HOLM	7/14/2010
ENGINEER	J. HOLM	7/14/2010
QA/CE		
CM		
APPROVED		

TEXAS INSTRUMENTS
Dallas Texas

TITLE
ICD, MECHANICAL, DMD,
.45 WXGA-800 DDR SERIES 241
(FQE PACKAGE)

SIZE	DWG NO	REV
D	2511423	C

SCALE 15:1 SHEET 1 OF 3

INV11-2006a

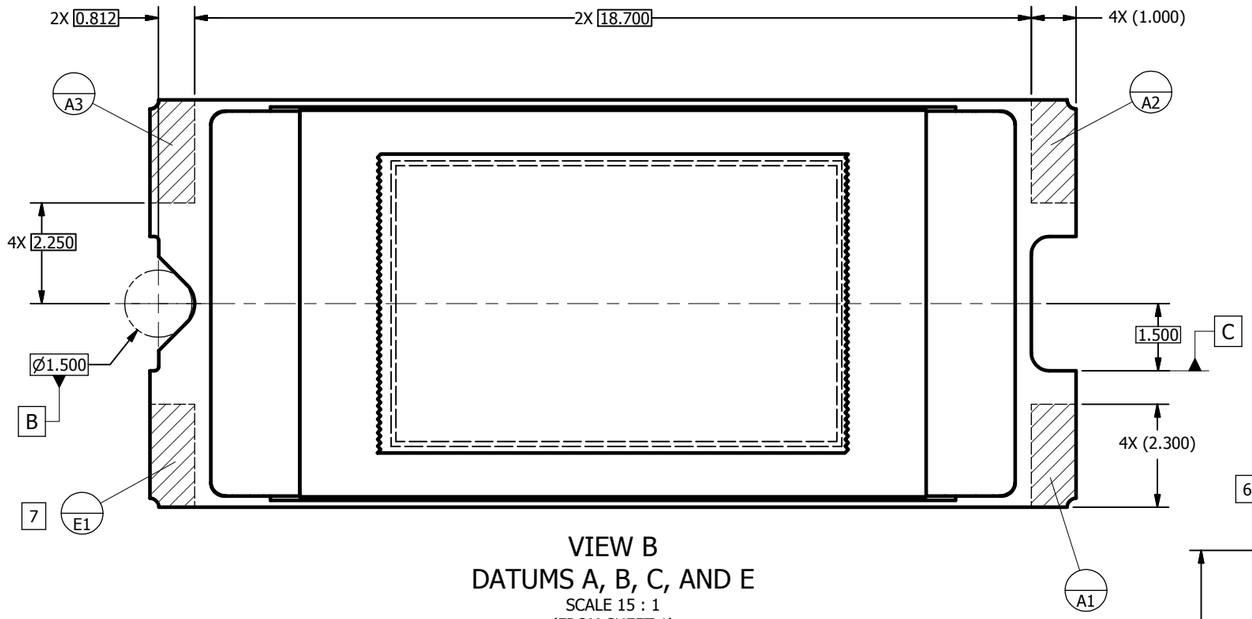

VIEW B
DATUMS A, B, C, AND E
SCALE 15 : 1
(FROM SHEET 1)

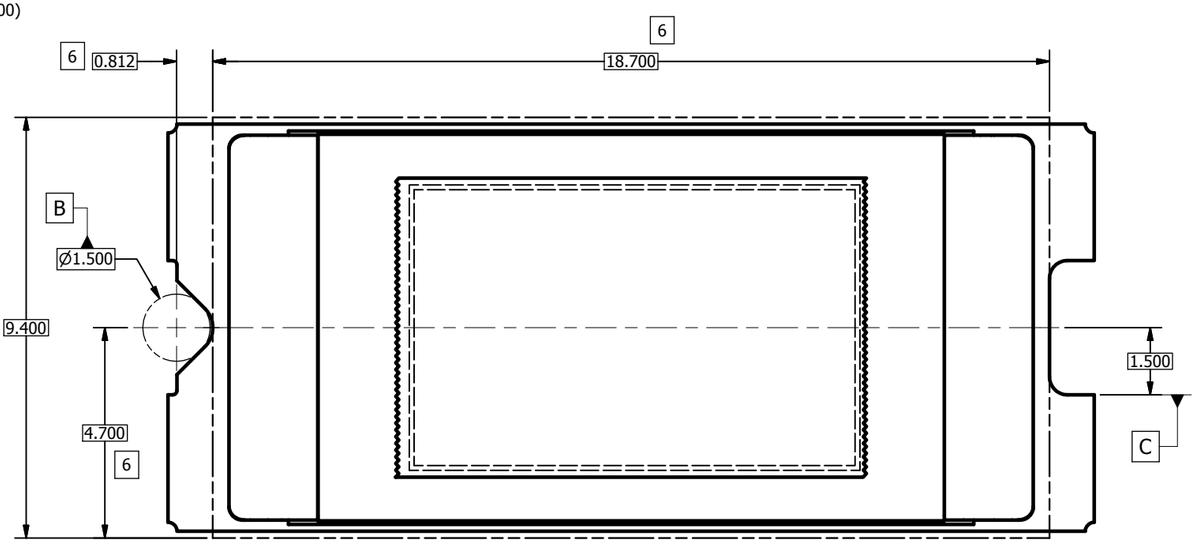

VIEW C
ENCAPSULANT MAXIMUM X/Y DIMENSIONS
SCALE 15 : 1
(FROM SHEET 1)

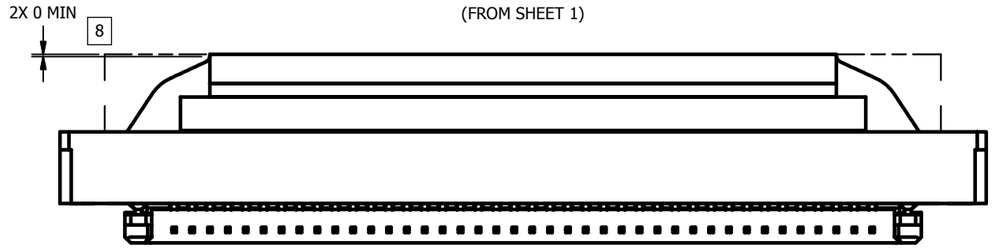

VIEW D
ENCAPSULANT MAXIMUM HEIGHT
SCALE 15 : 1

TEXAS INSTRUMENTS Dallas Texas	DRAWN J. HOLM	DATE 7/14/2010	SIZE D		DWG NO 2511423	REV C
			SCALE		SHEET 2 OF 3	

INV11-2006a

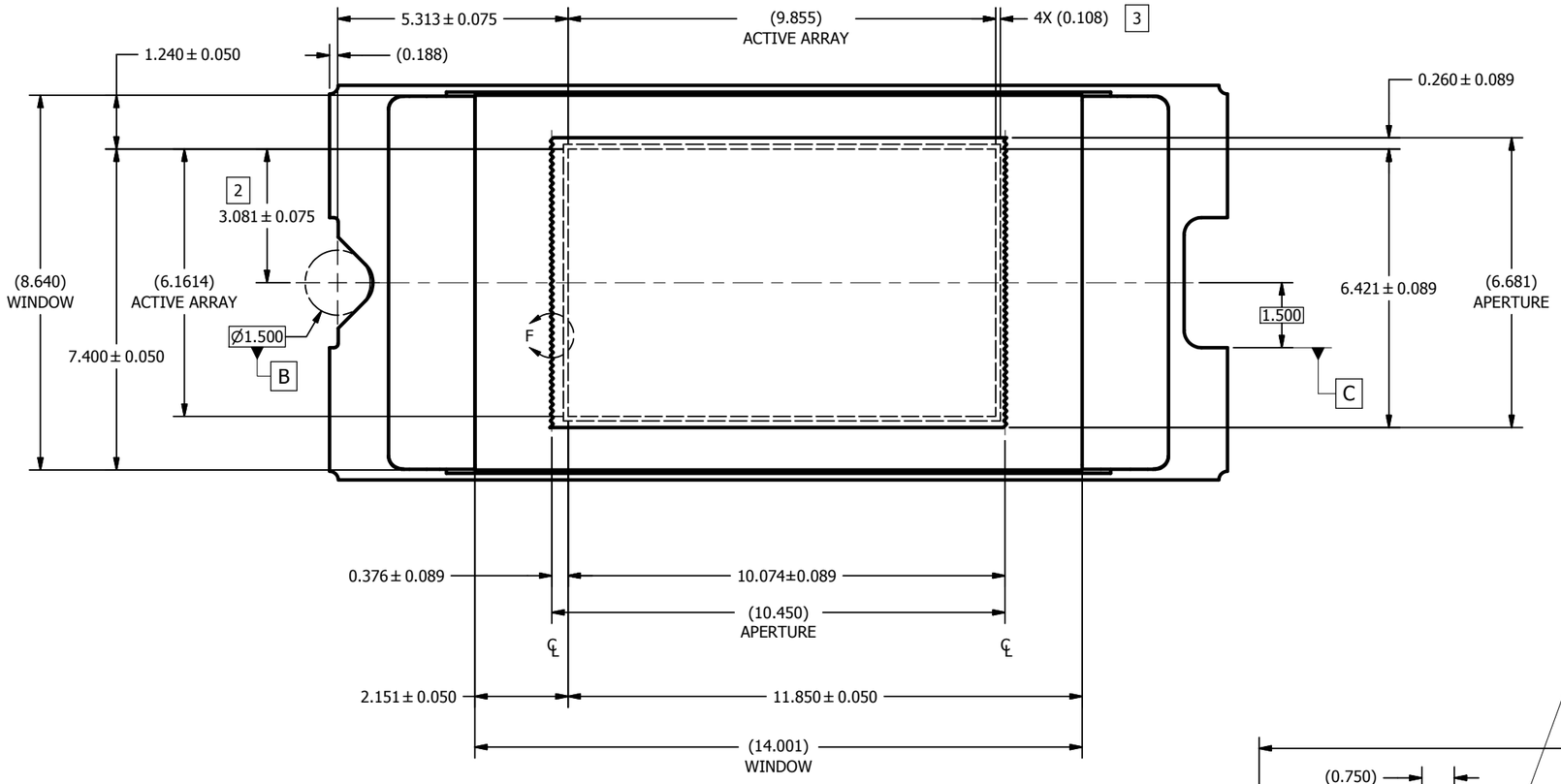

VIEW D
WINDOW AND ACTIVE ARRAY
(FROM SHEET 1)

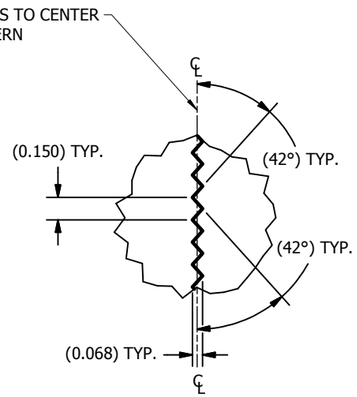

DETAIL F
APERTURE SHORT EDGES
SCALE 50 : 1

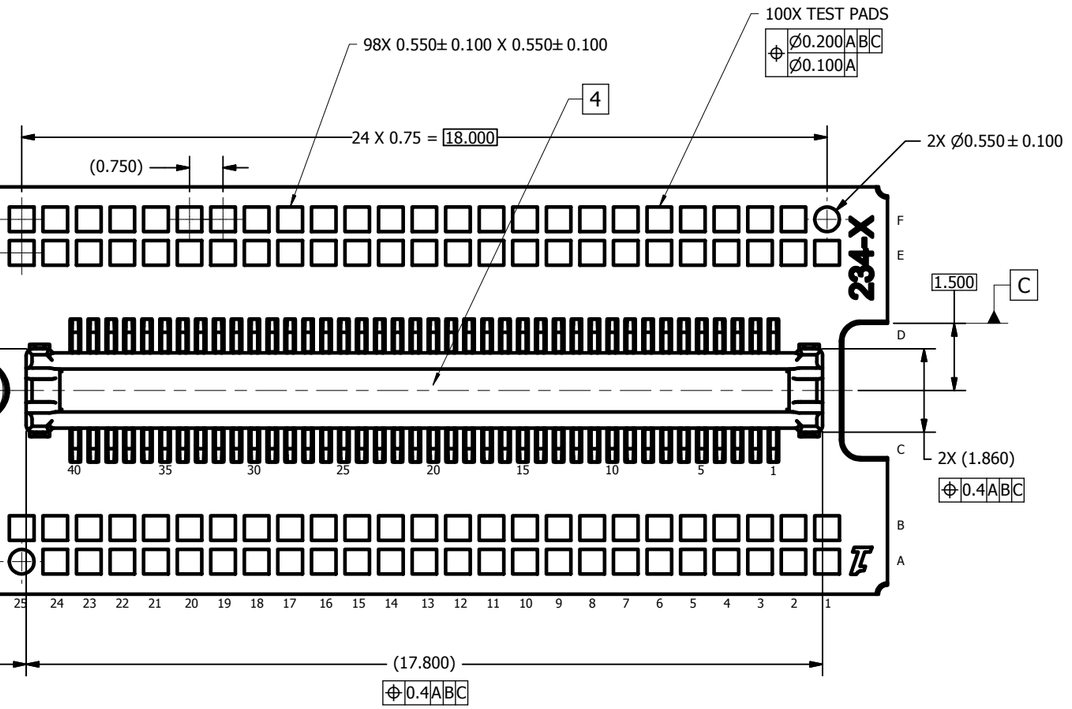

VIEW E-E
TEST PADS AND CONNECTOR
(FROM SHEET 1)

Texas Instruments Dallas Texas	DRAWN J. HOLM	DATE 7/14/2010	SIZE D		DWG NO 2511423	REV C
			SCALE		SHEET 3 OF 3	

INV11-2006a

IMPORTANT NOTICE

Texas Instruments Incorporated (TI) reserves the right to make corrections, enhancements, improvements and other changes to its semiconductor products and services per JESD46, latest issue, and to discontinue any product or service per JESD48, latest issue. Buyers should obtain the latest relevant information before placing orders and should verify that such information is current and complete.

TI's published terms of sale for semiconductor products (http://www.ti.com/sc/docs/stdterms.htm) apply to the sale of packaged integrated circuit products that TI has qualified and released to market. Additional terms may apply to the use or sale of other types of TI products and services.

Reproduction of significant portions of TI information in TI data sheets is permissible only if reproduction is without alteration and is accompanied by all associated warranties, conditions, limitations, and notices. TI is not responsible or liable for such reproduced documentation. Information of third parties may be subject to additional restrictions. Resale of TI products or services with statements different from or beyond the parameters stated by TI for that product or service voids all express and any implied warranties for the associated TI product or service and is an unfair and deceptive business practice. TI is not responsible or liable for any such statements.

Buyers and others who are developing systems that incorporate TI products (collectively, "Designers") understand and agree that Designers remain responsible for using their independent analysis, evaluation and judgment in designing their applications and that Designers have full and exclusive responsibility to assure the safety of Designers' applications and compliance of their applications (and of all TI products used in or for Designers' applications) with all applicable regulations, laws and other applicable requirements. Designer represents that, with respect to their applications, Designer has all the necessary expertise to create and implement safeguards that (1) anticipate dangerous consequences of failures, (2) monitor failures and their consequences, and (3) lessen the likelihood of failures that might cause harm and take appropriate actions. Designer agrees that prior to using or distributing any applications that include TI products, Designer will thoroughly test such applications and the functionality of such TI products as used in such applications.

TI's provision of technical, application or other design advice, quality characterization, reliability data or other services or information, including, but not limited to, reference designs and materials relating to evaluation modules, (collectively, "TI Resources") are intended to assist designers who are developing applications that incorporate TI products; by downloading, accessing or using TI Resources in any way, Designer (individually or, if Designer is acting on behalf of a company, Designer's company) agrees to use any particular TI Resource solely for this purpose and subject to the terms of this Notice.

TI's provision of TI Resources does not expand or otherwise alter TI's applicable published warranties or warranty disclaimers for TI products, and no additional obligations or liabilities arise from TI providing such TI Resources. TI reserves the right to make corrections, enhancements, improvements and other changes to its TI Resources. TI has not conducted any testing other than that specifically described in the published documentation for a particular TI Resource.

Designer is authorized to use, copy and modify any individual TI Resource only in connection with the development of applications that include the TI product(s) identified in such TI Resource. NO OTHER LICENSE, EXPRESS OR IMPLIED, BY ESTOPPEL OR OTHERWISE TO ANY OTHER TI INTELLECTUAL PROPERTY RIGHT, AND NO LICENSE TO ANY TECHNOLOGY OR INTELLECTUAL PROPERTY RIGHT OF TI OR ANY THIRD PARTY IS GRANTED HEREIN, including but not limited to any patent right, copyright, mask work right, or other intellectual property right relating to any combination, machine, or process in which TI products or services are used. Information regarding or referencing third-party products or services does not constitute a license to use such products or services, or a warranty or endorsement thereof. Use of TI Resources may require a license from a third party under the patents or other intellectual property of the third party, or a license from TI under the patents or other intellectual property of TI.

TI RESOURCES ARE PROVIDED "AS IS" AND WITH ALL FAULTS. TI DISCLAIMS ALL OTHER WARRANTIES OR REPRESENTATIONS, EXPRESS OR IMPLIED, REGARDING RESOURCES OR USE THEREOF, INCLUDING BUT NOT LIMITED TO ACCURACY OR COMPLETENESS, TITLE, ANY EPIDEMIC FAILURE WARRANTY AND ANY IMPLIED WARRANTIES OF MERCHANTABILITY, FITNESS FOR A PARTICULAR PURPOSE, AND NON-INFRINGEMENT OF ANY THIRD PARTY INTELLECTUAL PROPERTY RIGHTS. TI SHALL NOT BE LIABLE FOR AND SHALL NOT DEFEND OR INDEMNIFY DESIGNER AGAINST ANY CLAIM, INCLUDING BUT NOT LIMITED TO ANY INFRINGEMENT CLAIM THAT RELATES TO OR IS BASED ON ANY COMBINATION OF PRODUCTS EVEN IF DESCRIBED IN TI RESOURCES OR OTHERWISE. IN NO EVENT SHALL TI BE LIABLE FOR ANY ACTUAL, DIRECT, SPECIAL, COLLATERAL, INDIRECT, PUNITIVE, INCIDENTAL, CONSEQUENTIAL OR EXEMPLARY DAMAGES IN CONNECTION WITH OR ARISING OUT OF TI RESOURCES OR USE THEREOF, AND REGARDLESS OF WHETHER TI HAS BEEN ADVISED OF THE POSSIBILITY OF SUCH DAMAGES.

Unless TI has explicitly designated an individual product as meeting the requirements of a particular industry standard (e.g., ISO/TS 16949 and ISO 26262), TI is not responsible for any failure to meet such industry standard requirements.

Where TI specifically promotes products as facilitating functional safety or as compliant with industry functional safety standards, such products are intended to help enable customers to design and create their own applications that meet applicable functional safety standards and requirements. Using products in an application does not by itself establish any safety features in the application. Designers must ensure compliance with safety-related requirements and standards applicable to their applications. Designer may not use any TI products in life-critical medical equipment unless authorized officers of the parties have executed a special contract specifically governing such use. Life-critical medical equipment is medical equipment where failure of such equipment would cause serious bodily injury or death (e.g., life support, pacemakers, defibrillators, heart pumps, neurostimulators, and implantables). Such equipment includes, without limitation, all medical devices identified by the U.S. Food and Drug Administration as Class III devices and equivalent classifications outside the U.S.

TI may expressly designate certain products as completing a particular qualification (e.g., Q100, Military Grade, or Enhanced Product). Designers agree that it has the necessary expertise to select the product with the appropriate qualification designation for their applications and that proper product selection is at Designers' own risk. Designers are solely responsible for compliance with all legal and regulatory requirements in connection with such selection.

Designer will fully indemnify TI and its representatives against any damages, costs, losses, and/or liabilities arising out of Designer's non-compliance with the terms and provisions of this Notice.

Mailing Address: Texas Instruments, Post Office Box 655303, Dallas, Texas 75265
Copyright © 2018, Texas Instruments Incorporated