DLP230KP 0.23 HD DMD

1 Features

- Ultra Compact 0.23-Inch (5.95-mm) Diagonal Micromirror Array
  - Displays HD 1280 × 720 Pixels On the Screen
  - 5.4 µm Micromirror Pitch
  - 17° Micromirror Tilt (Relative to Flat Surface)
  - Side Illumination for Optimal Efficiency and Optical Engine Size
  - Polarization Independent Aluminum Micromirror Surface
- 8-Bit SubLVDS Input Data Bus
- Dedicated DLPC3434 Controller for Display Applications
- Dedicated DLPA2000, DLPA2005, or DLPA3000 PMIC/LED Driver for Reliable Operation

2 Display Applications

- Ultra Mobile, Ultra Low Power Pico Projectors
- Phone, Tablet and Laptop
- Smart Speaker
- Smart Home

3 Description

The DLP230KP digital micromirror device (DMD) is a digitally controlled micro-opto-electromechanical system (MOEMS) spatial light modulator (SLM). When coupled to an appropriate optical system, the device DMD displays a crisp and high quality HD image or video. DLP230KP is part of the chipset comprising the DLP230KP DMD and DLPC3434 controller. The DLPA2000, DLP2005, and DLP3000 PMIC/LED drivers also support this chipset. The compact physical size of the device applies to portable equipment where high image quality, small form factor, and low power are important.

Visit the *Getting Started with TI DLP® Pico™ Display Technology* page to learn more about DMD technology.

The DLP230KP includes established resources to help the user accelerate the design cycle, which include production ready optical modules, optical modules manufacturers, and design houses.

Device Information(1)

PART NUMBER	PACKAGE	BODY SIZE (NOM)
DLP230KP	FQP (54)	16.8 mm × 5.92 mm × 3.58 mm

(1) For all available packages, see the orderable addendum at the end of the data sheet.

Simplified Application

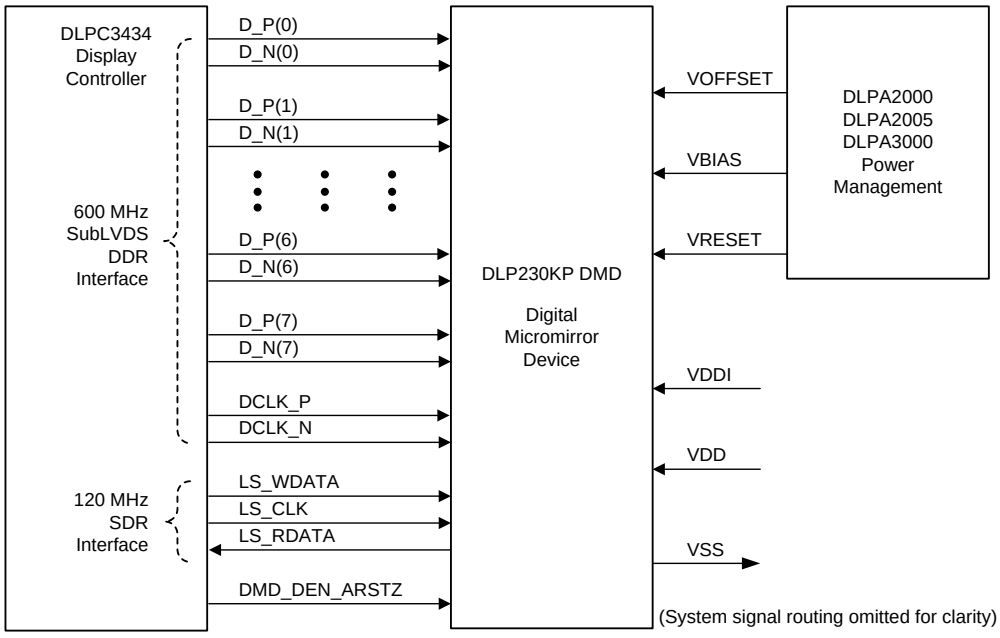

An IMPORTANT NOTICE at the end of this data sheet addresses availability, warranty, changes, use in safety-critical applications, intellectual property matters and other important disclaimers. PRODUCTION DATA.

Table of Contents

1 **Features** ... 1
2 **Display Applications** ... 1
3 **Description** ... 1
4 **Revision History** ... 2
5 **Device and Documentation Support** ... 3
5.1 Device Support ... 3
5.2 Related Links ... 3
5.3 Community Resources ... 3
5.4 Trademarks ... 4
5.5 Electrostatic Discharge Caution ... 4
5.6 Glossary ... 4
6 **Mechanical, Packaging, and Orderable Information** ... 4

4 Revision History

NOTE: Page numbers for previous revisions may differ from page numbers in the current version.

Changes from Original (July 2018) to Revision A	**Page**
• Updated *Simplified Application*	1
• Changed data sheet status from *Advance Information* to *Production Data*	1

Copyright © 2018, Texas Instruments Incorporated

5 Device and Documentation Support

5.1 Device Support

5.1.1 Device Nomenclature

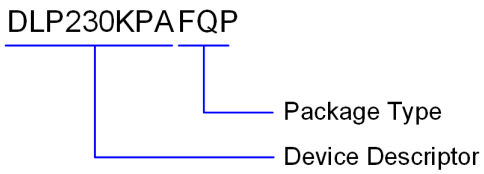

Figure 1. Part Number Description

5.1.2 Device Markings

The device marking includes the legible character string GHJJJJK DLP230KPAFQP. GHJJJJK is the lot trace code. DLP230KPAFQP is the device marking.

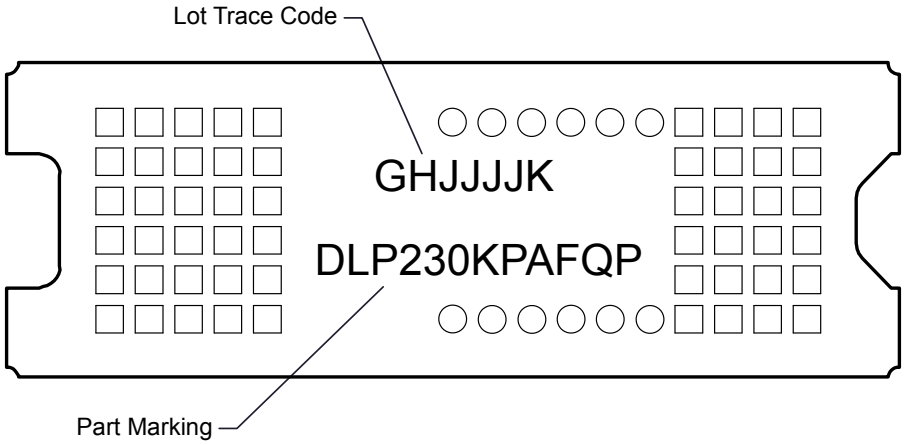

Figure 2. DMD Marking

5.2 Related Links

The table below lists quick access links. Categories include technical documents, support and community resources, tools and software, and quick access to sample or buy.

Table 1. Related Links

PARTS	PRODUCT FOLDER	SAMPLE & BUY	TECHNICAL DOCUMENTS	TOOLS & SOFTWARE	SUPPORT & COMMUNITY
DLP230KP	TBD	TBD	TBD	TBD	TBD
DLPC3434	TBD	TBD	TBD	TBD	TBD
DLPA3000TBD	Click here	Click here	Click here	Click here	Click here
DLPA2000	Click here	Click here	Click here	Click here	Click here
DLPA2005	Click here	Click here	Click here	Click here	Click here

5.3 Community Resources

The following links connect to TI community resources. Linked contents are provided "AS IS" by the respective contributors. They do not constitute TI specifications and do not necessarily reflect TI's views; see TI's Terms of Use.

Copyright © 2018, Texas Instruments Incorporated

Community Resources (continued)

TI E2E™ Online Community ***TI's Engineer-to-Engineer (E2E) Community.*** Created to foster collaboration among engineers. At e2e.ti.com, you can ask questions, share knowledge, explore ideas and help solve problems with fellow engineers.

Design Support ***TI's Design Support*** Quickly find helpful E2E forums along with design support tools and contact information for technical support.

5.4 Trademarks

E2E is a trademark of Texas Instruments.

5.5 Electrostatic Discharge Caution



These devices have limited built-in ESD protection. The leads should be shorted together or the device placed in conductive foam during storage or handling to prevent electrostatic damage to the MOS gates.

5.6 Glossary

SLYZ022 — *TI Glossary*.

This glossary lists and explains terms, acronyms, and definitions.

6 Mechanical, Packaging, and Orderable Information

The following pages include mechanical, packaging, and orderable information. This information is the most current data available for the designated devices. This data is subject to change without notice and revision of this document. For browser-based versions of this data sheet, refer to the left-hand navigation.

Copyright © 2018, Texas Instruments Incorporated

PACKAGING INFORMATION

Orderable Device	Status (1)	Package Type	Package Drawing	Pins	Package Qty	Eco Plan (2)	Lead/Ball Finish (6)	MSL Peak Temp (3)	Op Temp (°C)	Device Marking (4/5)	Samples
DLP230KPAFQP	ACTIVE	CLGA	FQP	54	100	RoHS & Green	Call TI	Level-1-NC-NC			Samples

(1) The marketing status values are defined as follows:
ACTIVE: Product device recommended for new designs.
LIFEBUY: TI has announced that the device will be discontinued, and a lifetime-buy period is in effect.
NRND: Not recommended for new designs. Device is in production to support existing customers, but TI does not recommend using this part in a new design.
PREVIEW: Device has been announced but is not in production. Samples may or may not be available.
OBSOLETE: TI has discontinued the production of the device.

(2) **RoHS:** TI defines "RoHS" to mean semiconductor products that are compliant with the current EU RoHS requirements for all 10 RoHS substances, including the requirement that RoHS substance do not exceed 0.1% by weight in homogeneous materials. Where designed to be soldered at high temperatures, "RoHS" products are suitable for use in specified lead-free processes. TI may reference these types of products as "Pb-Free".
RoHS Exempt: TI defines "RoHS Exempt" to mean products that contain lead but are compliant with EU RoHS pursuant to a specific EU RoHS exemption.
Green: TI defines "Green" to mean the content of Chlorine (Cl) and Bromine (Br) based flame retardants meet JS709B low halogen requirements of <=1000ppm threshold. Antimony trioxide based flame retardants must also meet the <=1000ppm threshold requirement.

(3) MSL, Peak Temp. - The Moisture Sensitivity Level rating according to the JEDEC industry standard classifications, and peak solder temperature.

(4) There may be additional marking, which relates to the logo, the lot trace code information, or the environmental category on the device.

(5) Multiple Device Markings will be inside parentheses. Only one Device Marking contained in parentheses and separated by a "~" will appear on a device. If a line is indented then it is a continuation of the previous line and the two combined represent the entire Device Marking for that device.

(6) Lead/Ball Finish - Orderable Devices may have multiple material finish options. Finish options are separated by a vertical ruled line. Lead/Ball Finish values may wrap to two lines if the finish value exceeds the maximum column width.

Important Information and Disclaimer: The information provided on this page represents TI's knowledge and belief as of the date that it is provided. TI bases its knowledge and belief on information provided by third parties, and makes no representation or warranty as to the accuracy of such information. Efforts are underway to better integrate information from third parties. TI has taken and continues to take reasonable steps to provide representative and accurate information but may not have conducted destructive testing or chemical analysis on incoming materials and chemicals. TI and TI suppliers consider certain information to be proprietary, and thus CAS numbers and other limited information may not be available for release.

In no event shall TI's liability arising out of such information exceed the total purchase price of the TI part(s) at issue in this document sold by TI to Customer on an annual basis.

IMPORTANT NOTICE AND DISCLAIMER

TI PROVIDES TECHNICAL AND RELIABILITY DATA (INCLUDING DATASHEETS), DESIGN RESOURCES (INCLUDING REFERENCE DESIGNS), APPLICATION OR OTHER DESIGN ADVICE, WEB TOOLS, SAFETY INFORMATION, AND OTHER RESOURCES “AS IS” AND WITH ALL FAULTS, AND DISCLAIMS ALL WARRANTIES, EXPRESS AND IMPLIED, INCLUDING WITHOUT LIMITATION ANY IMPLIED WARRANTIES OF MERCHANTABILITY, FITNESS FOR A PARTICULAR PURPOSE OR NON-INFRINGEMENT OF THIRD PARTY INTELLECTUAL PROPERTY RIGHTS.

These resources are intended for skilled developers designing with TI products. You are solely responsible for (1) selecting the appropriate TI products for your application, (2) designing, validating and testing your application, and (3) ensuring your application meets applicable standards, and any other safety, security, or other requirements. These resources are subject to change without notice. TI grants you permission to use these resources only for development of an application that uses the TI products described in the resource. Other reproduction and display of these resources is prohibited. No license is granted to any other TI intellectual property right or to any third party intellectual property right. TI disclaims responsibility for, and you will fully indemnify TI and its representatives against, any claims, damages, costs, losses, and liabilities arising out of your use of these resources.

TI’s products are provided subject to TI’s Terms of Sale (www.ti.com/legal/termsofsale.html) or other applicable terms available either on ti.com or provided in conjunction with such TI products. TI’s provision of these resources does not expand or otherwise alter TI’s applicable warranties or warranty disclaimers for TI products.

Mailing Address: Texas Instruments, Post Office Box 655303, Dallas, Texas 75265
Copyright © 2018, Texas Instruments Incorporated