DLP2010NIR (0.2 WVGA Near-Infrared DMD)

1 Features

- 0.2-Inch (5.29-mm) Diagonal Micromirror Array
  - 854 × 480 Array of Aluminum Micrometer-Sized Mirrors, in an Orthogonal Layout
  - 5.4-µm Micromirror Pitch
  - ±17° Micromirror Tilt (Relative to Flat Surface)
  - Side Illumination for Optimal Efficiency and Optical Engine Size
- Highly Efficient Steering of NIR light
  - Window Transmission Efficiency 96% Nominal (700 to 2000 nm, Single Pass Through Two Window Surfaces)
  - Window Transmission Efficiency 90% Nominal (2000 to 2500 nm, Single Pass Through Two Window Surfaces)
  - Polarization Independent Aluminum Micromirrors
- Dedicated DLPC150 Controller for Reliable Operation
  - Binary Pattern Rates up to 2880 Hz
  - Pattern Sequence Mode for Control over Each Micromirror in Array
- Dedicated Power Management Integrated Circuit (PMIC) DLPA2000 or DLPA2005 for Reliable Operation
- 15.9-mm × 5.3-mm × 4-mm Body Size for Portable Instruments

2 Applications

- Spectrometers (Chemical Analysis):
  - Portable Process Analyzers
  - Portable Equipment
- Compressive Sensing (Single Pixel NIR Cameras)
- 3D Biometrics
- Machine Vision
- Infrared Scene Projection
- Microscopes
- Laser Marking
- Optical Choppers
- Optical Networking

3 Description

The DLP2010NIR digital micromirror device (DMD) acts as a spatial light modulator (SLM) to steer near-infrared (NIR) light and create patterns with speed, precision, and efficiency. Featuring high resolution in a compact form factor, the DLP2010NIR DMD is often combined with a grating single element detector to replace expensive InGaAs linear array-based detector designs, leading to high performance, cost-effective portable NIR Spectroscopy solutions. The DLP2010NIR DMD enables wavelength control and programmable spectrum and is well suited for low power mobile applications such as skin analysis, material identification and chemical sensing.

Device Information(1)

PART NUMBER	PACKAGE	BODY SIZE (NOM)
DLP2010NIR	CLGA (40)	15.90 × 5.30 × 4.00 mm

(1) For all available packages, see the orderable addendum at the end of the data sheet.

DLP® 0.2" WVGA Chipset

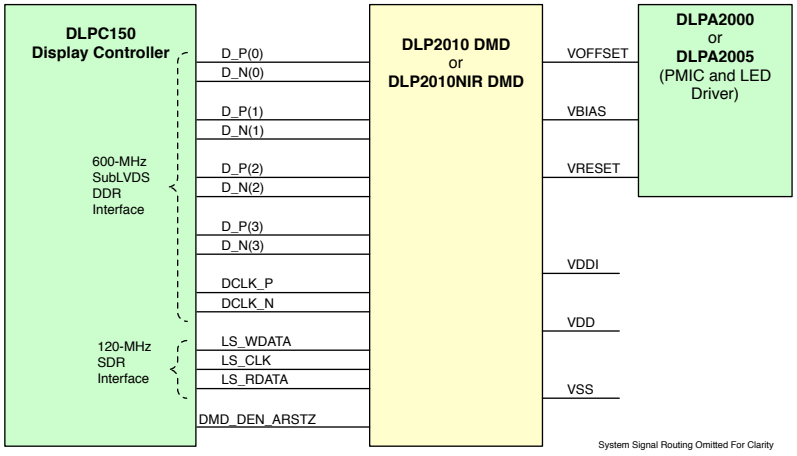

Table of Contents

1 Features ... 1
2 Applications ... 1
3 Description ... 1
4 Revision History ... 2
5 Pin Configuration and Functions ... 3
6 Specifications ... 6
6.1 Absolute Maximum Ratings ... 6
6.2 Storage Conditions ... 6
6.3 ESD Ratings ... 7
6.4 Recommended Operating Conditions ... 7
6.5 Thermal Information ... 9
6.6 Electrical Characteristics ... 9
6.7 Timing Requirements ... 10
6.8 Switching Characteristics ... 15
6.9 System Mounting Interface Loads ... 15
6.10 Physical Characteristics of the Micromirror Array ... 16
6.11 Micromirror Array Optical Characteristics ... 17
6.12 Window Characteristics ... 18
6.13 Chipset Component Usage Specification ... 18
6.14 Typical Characteristics ... 18
7 Detailed Description ... 19
7.1 Overview ... 19
7.2 Functional Block Diagram ... 19
7.3 Feature Description ... 20
7.4 Device Functional Modes ... 20
7.5 Window Characteristics and Optics ... 20
7.6 Micromirror Array Temperature Calculation ... 21
7.7 Micromirror Landed-On/Landed-Off Duty Cycle ... 22
8 Application and Implementation ... 24
8.1 Application Information ... 24
8.2 Typical Application ... 24
9 Power Supply Recommendations ... 27
9.1 Power Supply Power-Up Procedure ... 27
9.2 Power Supply Power-Down Procedure ... 27
9.3 Power Supply Sequencing Requirements ... 28
10 Layout ... 30
10.1 Layout Guidelines ... 30
10.2 Layout Example ... 30
11 Device and Documentation Support ... 32
11.1 Device Support ... 32
11.2 Related Links ... 32
11.3 Community Resources ... 33
11.4 Trademarks ... 33
11.5 Electrostatic Discharge Caution ... 33
11.6 Glossary ... 33
12 Mechanical, Packaging, and Orderable Information ... 33

4 Revision History

NOTE: Page numbers for previous revisions may differ from page numbers in the current version.

Changes from Original (March 2015) to Revision A	Page
• Lowered minimum delay time	29
• Added *Community Resources*	33

Copyright © 2015, Texas Instruments Incorporated

5 Pin Configuration and Functions

FQJ Package
40-Pin CLGA
Bottom View

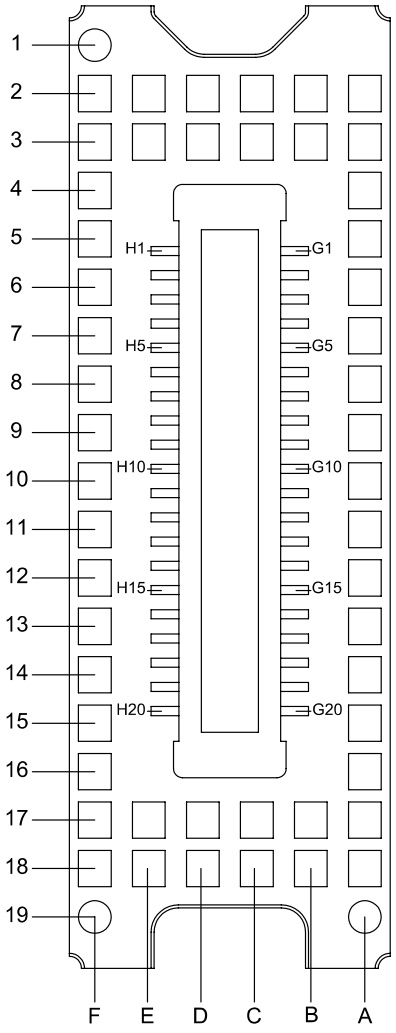

Pin Functions – Connector Pins(1)

PIN		TYPE	SIGNAL	DATA RATE	DESCRIPTION	PACKAGE NET TRACE LENGTH(2) (mm)
NAME	NO.					
DATA INPUTS, SUBLVDS INTERFACE						
D_N(0)	G4	I	SubLVDS	Double	Input Data Pair 0, Negative	7.03
D_P(0)	G3	I	SubLVDS	Double	Input Data Pair 0, Positive	7.03
D_N(1)	G8	I	SubLVDS	Double	Input Data Pair 1, Negative	7.03
D_P(1)	G7	I	SubLVDS	Double	Input Data Pair 1, Positive	7.03
D_N(2)	H5	I	SubLVDS	Double	Input Data Pair 2, Negative	7.02
D_P(2)	H6	I	SubLVDS	Double	Input Data Pair 2, Positive	7.02

(1) Low speed interface is LPSDR and adheres to the Electrical Characteristics and AC/DC Operating Conditions table in JEDEC Standard No. 209B, *Low Power Double Data Rate (LPDDR)* JESD209B.
(2) Net trace lengths inside the package:
Relative dielectric constant for the FQJ ceramic package is 9.8.
Propagation speed = 11.8 / sqrt(9.8) = 3.769 inches/ns.
Propagation delay = 0.265 ns/inch = 265 ps/inch = 10.43 ps/mm.

Copyright © 2015, Texas Instruments Incorporated

Pin Functions – Connector Pins[1] (continued)

PIN		TYPE	SIGNAL	DATA RATE	DESCRIPTION	PACKAGE NET TRACE LENGTH[2] (mm)
NAME	NO.					
D_N(3)	H1	I	SubLVDS	Double	Input Data Pair 3, Negative	7.00
D_P(3)	H2	I	SubLVDS	Double	Input Data Pair 3, Positive	7.00
DCLK_N	H9	I	SubLVDS	Double	Clock, Negative	7.03
DCLK_P	H10	I	SubLVDS	Double	Clock, Positive	7.03
CONTROL INPUTS, LPSDR INTERFACE						
DMD_DEN_ARSTZ	G12	I	LPSDR[1]		Active low asynchronous DMD reset signal. A low signal places the DMD in reset. A high signal releases the DMD from reset and places it in active mode.	5.72
LS_CLK	G19	I	LPSDR	Single	Clock for low-speed interface	3.54
LS_WDATA	G18	I	LPSDR	Single	Write data for low-speed interface	3.54
LS_RDATA	G11	O	LPSDR	Single	Read data for low-speed interface	8.11
POWER						
VBIAS[3]	H17	Power			Supply voltage for Micromirror positive bias level	
VOFFSET[3]	H13	Power			Supply voltage for High Voltage CMOS (HVCMOS) core logic. Includes: supply voltage for stepped high level at micromirror address electrodes and supply voltage for offset level at micromirrors.	
VRESET[3]	H18	Power			Supply voltage for Micromirror negative reset level	
VDD[3]	G20	Power			Supply voltage for low voltage CMOS (LVCMOS) core logic. Includes supply voltage for LPSDR inputs and supply voltage for normal high level at micromirror address electrodes.	
VDD	H14	Power				
VDD	H15	Power				
VDD	H16	Power				
VDD	H19	Power				
VDD	H20	Power				
VDDI[3]	G1	Power			Supply voltage for SubLVDS receivers	
VDDI	G2	Power				
VDDI	G5	Power				
VDDI	G6	Power				
VSS[3]	G9	Power			Ground. Common return for all power.	
VSS	G10	Power				
VSS	G13	Power				
VSS	G14	Power				
VSS	G15	Power				
VSS	G16	Power				
VSS	G17	Power				
VSS	H3	Power				
VSS	H4	Power				
VSS	H7	Power				
VSS	H8	Power				
VSS	H11	Power				
VSS	H12	Power				

(3) The following power supplies are all required to operate the DMD: VSS, VDD, VDDI, VOFFSET, VBIAS, VRESET.

Copyright © 2015, Texas Instruments Incorporated

Pin Functions – Connector Pins[1] (continued)

PIN		TYPE	SIGNAL	DATA RATE	DESCRIPTION	PACKAGE NET TRACE LENGTH[2] (mm)
NAME	NO.					
RESERVED						
No Connect	A2, A3, A4, A5, A6 A7, A8, A9, A10, A11, A12, A13, A14, A15, A16, A17, A18, A19				Reserved pins. For proper device operation, leave these pins unconnected.	
No Connect	B2, B3, B17, B18				Reserved pins. For proper device operation, leave these pins unconnected.	
No Connect	C2, C3, C17, C18				Reserved pins. For proper device operation, leave these pins unconnected.	
No Connect	D2, D3, D17, D18				Reserved pins. For proper device operation, leave these pins unconnected.	
No Connect	E2, E3, E17, E18				Reserved pins. For proper device operation, leave these pins unconnected.	
No Connect	F1, F2, F3, F4, F5, F6, F7, F8, F9, F10, F11, F12, F13, F14, F15, F16, F17, F18, F19				Resereved pins. For proper device operation, leave these pins unconnected.	

Copyright © 2015, Texas Instruments Incorporated

6 Specifications

6.1 Absolute Maximum Ratings

(see (1))

			MIN	MAX	UNIT
Supply voltage	VDD	Supply voltage for LVCMOS core logic and LPSDR low speed interface(2)	–0.5	2.3	V
	VDDI	Supply voltage for SubLVDS receivers(2)	–0.5	2.3	V
	VOFFSET	Supply voltage for HVCMOS and micromirror electrode(2) (3)	–0.5	10.6	V
	VBIAS	Supply voltage for micromirror electrode bias circuits(2)	–0.5	19	V
	VRESET	Supply voltage for micromirror electrode reset circuits(2)	–15	0.3	V
	| VDDI–VDD |	Supply voltage delta (absolute value)(4)		0.3	V
	| VBIAS–VOFFSET |	Supply voltage delta (absolute value)(5)		11	V
	| VBIAS–VRESET |	Supply voltage delta (absolute value)(6)		34	V
Input voltage	Input voltage for other inputs LPSDR(2)		–0.5	VDD + 0.5	V
	Input voltage for other inputs SubLVDS(2) (7)		–0.5	VDDI + 0.5	V
Input pins	| VID |	SubLVDS input differential voltage (absolute value)(7)		810	mV
	IID	SubLVDS input differential current		8.1	mA
Clock frequency	f_{clock}	Clock frequency for low speed interface LS_CLK		130	MHz
	f_{clock}	Clock frequency for high speed interface DCLK		620	MHz
Environmental	T_{ARRAY} and T_{WINDOW}	Temperature – operational(8)	–10	90	°C
		Temperature – non-operational(8)	–40	90	°C
	T_{DP}	Dew Point (operating and non-operating)		81	°C

(1) Stresses beyond those listed under *Absolute Maximum Ratings* may cause permanent damage to the device. These are stress ratings only, and functional operation of the device is not implied at these or any other conditions beyond those indicated under *Recommended Operating Conditions*. Exposure above or below *Recommended Operating Conditions* for extended periods may affect device reliability.
(2) All voltage values are with respect to the ground terminals (VSS). The following power supplies are all required to operate the DMD: VSS, VDD, VDDI, VOFFSET, VBIAS, and VRESET.
(3) VOFFSET supply transients must fall within specified voltages.
(4) Exceeding the recommended allowable absolute voltage difference between VDDI and VDD may result in excessive current draw.
(5) Exceeding the recommended allowable absolute voltage difference between VBIAS and VOFFSET may result in excessive current draw.
(6) Exceeding the recommended allowable absolute voltage difference between VBIAS and VRESET may result in excessive current draw.
(7) This maximum input voltage rating applies when each input of a differential pair is at the same voltage potential. Sub-LVDS differential inputs must not exceed the specified limit or damage may result to the internal termination resistors.
(8) The highest temperature of the active array (as calculated by the *Micromirror Array Temperature Calculation*), or of any point along the Window Edge as defined in Figure 19. The locations of thermal test points TP2 and TP3 in Figure 19 are intended to measure the highest window edge temperature. If a particular application causes another point on the window edge to be at a higher temperature, that test point should be used.

6.2 Storage Conditions

applicable before the DMD is installed in the final product.

		MIN	MAX	UNIT
T_{stg}	DMD storage temperature	–40	85	°C
T_{DP}	Storage Dew Point - long-term (1)		24	
	Storage Dew Point - short-term (2)		28	

(1) Long-term is defined as the usable life of the device.
(2) Dew points beyond the specified long-term dew point are for short-term conditions only, where Short-term is defined as less than 60 cumulative days over the usable life of the device (operating, non-operating, or storage).

Copyright © 2015, Texas Instruments Incorporated

6.3 ESD Ratings

			VALUE	UNIT
$V_{(ESD)}$	Electrostatic discharge	Human body model (HBM), per ANSI/ESDA/JEDEC JS-001(1)	±1000	V

(1) JEDEC document JEP155 states that 500-V HBM allows safe manufacturing with a standard ESD control process.

6.4 Recommended Operating Conditions

Over operating free-air temperature range (unless otherwise noted)(1)(2)

		MIN	NOM	MAX	UNIT
SUPPLY VOLTAGE RANGE(3)					
VDD	Supply voltage for LVCMOS core logic Supply voltage for LPSDR low-speed interface	1.65	1.8	1.95	V
VDDI	Supply voltage for SubLVDS receivers	1.65	1.8	1.95	V
VOFFSET	Supply voltage for HVCMOS and micromirror electrode(4)	9.5	10	10.5	V
VBIAS	Supply voltage for mirror electrode	17.5	18	18.5	V
VRESET	Supply voltage for micromirror electrode	–14.5	–14	–13.5	V
|VDDI–VDD|	Supply voltage delta (absolute value)(5)			0.3	V
|VBIAS–VOFFSET|	Supply voltage delta (absolute value)(6)			10.5	V
|VBIAS–VRESET|	Supply voltage delta (absolute value)(7)			33	V
OUTPUT TERMINALS					
I_{OH}	High-level output current at Voh = 0.8 × VDD			–30	mA
I_{OL}	Low-level output current at Vol = 0.2 × VDD			30	mA
CLOCK FREQUENCY					
f_{clock}	Clock frequency for low speed interface LS_CLK(8)	108		120	MHz
f_{clock}	Clock frequency for high speed interface DCLK(9)	300		600	MHz
	Duty cycle distortion DCLK	44%		56%	
SUBLVDS INTERFACE(9)					
$\lvert V_{ID} \rvert$	SubLVDS input differential voltage (absolute value) Figure 8, Figure 9	150	250	350	mV
V_{CM}	Common mode voltage Figure 8, Figure 9	700	900	1100	mV
$V_{SUBLVDS}$	SubLVDS voltage Figure 8, Figure 9	575		1225	mV
Z_{LINE}	Line differential impedance (PWB/trace)	90	100	110	Ω
Z_{IN}	Internal differential termination resistance Figure 10	80	100	120	Ω
	100-Ω differential PCB trace	6.35		152.4	mm
LPSDR INTERFACE(10)					
Z_{LINE}	Line differential impedance (PWB/trace)	61.2	68	74.8	Ω

(1) *Recommended Operating Conditions* are applicable after the DMD is installed in the final product.
(2) The functional performance of the device specified in this datasheet is achieved when operating the device within the limits defined by the *Recommended Operating Conditions*. No level of performance is implied when operating the device above or below the Recommended Operating Conditions limits.
(3) All voltage values are with respect to the ground pins (VSS).
(4) VOFFSET supply transients must fall within specified max voltages.
(5) To prevent excess current, the supply voltage delta |VDDI – VDD| must be less than specified limit.
(6) To prevent excess current, the supply voltage delta |VBIAS – VOFFSET| must be less than specified limit.
(7) To prevent excess current, the supply voltage delta |VBIAS – VRESET| must be less than specified limit.
(8) LS_CLK must run as specified to ensure internal DMD timing for reset waveform commands.
(9) Refer to the SubLVDS timing requirements in *Timing Requirements*.
(10) Refer to the LPSDR timing requirements in *Timing Requirements*.

Copyright © 2015, Texas Instruments Incorporated

Recommended Operating Conditions (continued)

Over operating free-air temperature range (unless otherwise noted)(1)(2)

		MIN	NOM	MAX	UNIT
ENVIRONMENTAL					
T_{ARRAY}	Array temperature – operational, long-term (11) (12) (13)	0		40 to 70(11)	°C
	Array temperature – operational, short-term (14) (12) (13)	–10		75	
T_{WINDOW}	Window temperature – operational(15)			90	°C
$\lvert T_{DELTA} \rvert$	Absolute Temperature difference between any point on the window edge and the ceramic test point TP1(16)			30	°C
$ILL_{UV\&VIS}$	Illumination, wavelength < 700 nm			0.68	mW/cm^2
ILL_{NIR}	Illumination, wavelength 700 - 2500 nm			2000	mW/cm^2
ILL_{IR}	Illumination, wavelength > 2500 nm			10	mW/cm^2

(11) Per Figure 1, the maximum operational array temperature should be derated based on the micromirror landed duty cycle that the DMD experiences in the end application. Refer to *Micromirror Landed-On/Landed-Off Duty Cycle* for a definition of micromirror landed duty cycle.
(12) Long-term is defined as the usable life of the device.
(13) The array temperature cannot be measured directly and must be computed analytically from the temperature measured at test point 1 (TP1) shown in Figure 19 and the **package thermal resistance** using *Micromirror Array Temperature Calculation*.
(14) Array temperatures beyond those specified as long-term are recommended for short-term conditions only (power-up). Short-term is defined as cumulative time over the usable life of the device and is less than 500 hours for temperatures between long-term maximum and 75°C, less than 500 hours for temperatures between 0°C and -10°C.
(15) Window temperature is the highest temperature on the window edge shown in Figure 19. The locations of thermal test points TP2 and TP3 in Figure 19 are intended to measure the highest window edge temperature. If a particular application causes another point on the window edge to be at a higher temperature, a test point should be added to that location.
(16) Temperature delta is the highest difference from the ceramic test point 1 (TP1) and anywhere on the window edge shown in Figure 19. The window test points TP2 and TP3 shown in Figure 19 are intended to result in the worst case delta temperature. If a particular application causes another point on the window edge to result in a larger delta temperature, that point should be used.

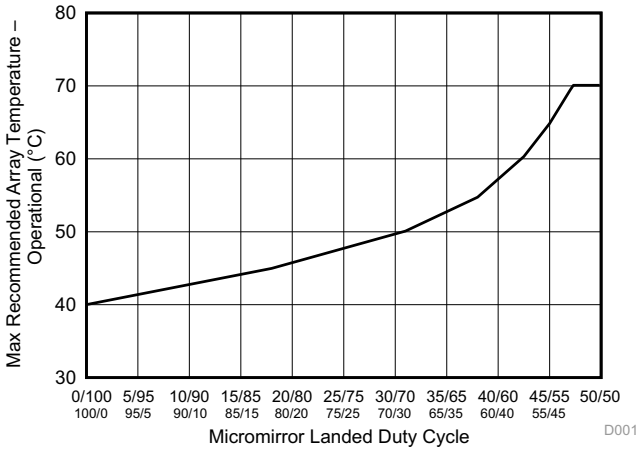

Figure 1. Max Recommended Array Temperature – Derating Curve

Copyright © 2015, Texas Instruments Incorporated

6.5 Thermal Information

THERMAL METRIC(1)	DLP2010NIR FQJ (CLGA) 40 PINS			UNIT
	MIN	TYP	MAX	
Thermal resistance Active area to test point TP1(1)			7.9	°C/W

(1) The DMD is designed to conduct absorbed and dissipated heat to the back of the package. The cooling system must be capable of maintaining the package within the temperature range specified in the *Recommended Operating Conditions* . The total heat load on the DMD is largely driven by the incident light absorbed by the active area; although other contributions include light energy absorbed by the window aperture and electrical power dissipation of the array. Optical systems should be designed to minimize the light energy falling outside the window clear aperture since any additional thermal load in this area can significantly degrade the reliability of the device.

6.6 Electrical Characteristics

Over operating free-air temperature range (unless otherwise noted)(1)

PARAMETER		TEST CONDITIONS(2)	MIN	TYP	MAX	UNIT
CURRENT						
I_{DD}	Supply current: VDD(3) (4)	VDD = 1.95 V			34.7	mA
		VDD = 1.8 V		27.5		
I_{DDI}	Supply current: VDDI(3) (4)	VDDI = 1.95 V			9.4	mA
		VDD = 1.8 V		6.6		
I_{OFFSET}	Supply current: VOFFSET(5) (6)	VOFFSET = 10.5 V			1.7	mA
		VOFFSET = 10 V		0.9		
I_{BIAS}	Supply current: VBIAS(5) (6)	VBIAS = 18.5 V			0.4	mA
		VBIAS = 18 V		0.2		
I_{RESET}	Supply current: VRESET(6)	VRESET = –14.5 V			2	mA
		VRESET = –14 V		1.2		
POWER(7)						
P_{DD}	Supply power dissipation: VDD(3) (4)	VDD = 1.95 V			67.7	mW
		VDD = 1.8 V		49.5		
P_{DDI}	Supply power dissipation: VDDI(3) (4)	VDDI = 1.95 V			18.3	mW
		VDD = 1.8 V		11.9		
P_{OFFSET}	Supply power dissipation: VOFFSET(5) (6)	VOFFSET = 10.5 V			17.9	mW
		VOFFSET = 10 V		9		
P_{BIAS}	Supply power dissipation: VBIAS(5) (6)	VBIAS = 18.5 V			7.4	mW
		VBIAS = 18 V		3.6		
P_{RESET}	Supply power dissipation: VRESET(6)	VRESET = –14.5 V			29	mW
		VRESET = –14 V		16.8		
P_{TOTAL}	Supply power dissipation: Total			90.8	140.3	mW
LPSDR INPUT(8)						
$V_{IH(DC)}$	DC input high voltage(9)		0.7 × VDD		VDD + 0.3	V
$V_{IL(DC)}$	DC input low voltage(9)		–0.3		0.3 × VDD	V
$V_{IH(AC)}$	AC input high voltage(9)		0.8 × VDD		VDD + 0.3	V
$V_{IL(AC)}$	AC input low voltage(9)		–0.3		0.2 × VDD	V

(1) Device electrical characteristics are over *Recommended Operating Conditions* unless otherwise noted.
(2) All voltage values are with respect to the ground pins (VSS).
(3) To prevent excess current, the supply voltage delta |VDDI – VDD| must be less than specified limit.
(4) Supply power dissipation based on non–compressed commands and data.
(5) To prevent excess current, the supply voltage delta |VBIAS – VOFFSET| must be less than specified limit.
(6) Supply power dissipation based on 3 global resets in 200 µs.
(7) The following power supplies are all required to operate the DMD: VSS, VDD, VDDI, VOFFSET, VBIAS, VRESET.
(8) LPSDR specifications are for pins LS_CLK and LS_WDATA.
(9) Low-speed interface is LPSDR and adheres to the Electrical Characteristics and AC/DC Operating Conditions table in JEDEC Standard No. 209B, *Low-Power Double Data Rate (LPDDR)* JESD209B.

Copyright © 2015, Texas Instruments Incorporated

Electrical Characteristics (continued)

Over operating free-air temperature range (unless otherwise noted)(1)

PARAMETER		TEST CONDITIONS(2)	MIN	TYP	MAX	UNIT
ΔV_T	Hysteresis ($V_{T+} - V_{T-}$)	Figure 10	0.1 × VDD		0.4 × VDD	V
I_{IL}	Low–level input current	VDD = 1.95 V; V_I = 0 V	–100			nA
I_{IH}	High–level input current	VDD = 1.95 V; V_I = 1.95 V			100	nA
LPSDR OUTPUT(10)						
V_{OH}	DC output high voltage	I_{OH} = –2 mA	0.8 × VDD			V
V_{OL}	DC output low voltage	I_{OL} = 2 mA			0.2 × VDD	V
CAPACITANCE						
C_{IN}	Input capacitance LPSDR	f = 1 MHz			10	pF
	Input capacitance SubLVDS	f = 1 MHz			20	pF
C_{OUT}	Output capacitance	f = 1 MHz			10	pF
C_{RESET}	Reset group capacitance	f = 1 MHz; (480 × 108) micromirrors	95		113	pF

(10) LPSDR specification is for pin LS_RDATA.

6.7 Timing Requirements

Device electrical characteristics are over *Recommended Operating Conditions* unless otherwise noted.

			MIN	NOM	MAX	UNIT
LPSDR						
t_R	Rise slew rate(1)	(30% to 80%) × VDD, Figure 3	1		3	V/ns
t_V	Fall slew rate(1)	(70% to 20%) × VDD, Figure 3	1		3	V/ns
t_R	Rise slew rate(2)	(20% to 80%) × VDD, Figure 3	0.25			V/ns
t_F	Fall slew rate(2)	(80% to 20%) × VDD, Figure 3	0.25			V/ns
t_C	Cycle time LS_CLK,	Figure 2	7.7	8.3		ns
$t_{W(H)}$	Pulse duration LS_CLK high	50% to 50% reference points,Figure 2	3.1			ns
$t_{W(L)}$	Pulse duration LS_CLK low	50% to 50% reference points, Figure 2	3.1			ns
t_{SU}	Setup time	LS_WDATA valid before LS_CLK ↑, Figure 2	1.5			ns
t_H	Hold time	LS_WDATA valid after LS_CLK ↑, Figure 2	1.5			ns
t_{WINDOW}	Window time(1) (3)	Setup time + Hold time, Figure 2	3			ns
$t_{DERATING}$	Window time derating(1) (3)	For each 0.25 V/ns reduction in slew rate below 1 V/ns, Figure 5		0.35		ns
SubLVDS						
t_R	Rise slew rate	20% to 80% reference points, Figure 4	0.7	1		V/ns
t_F	Fall slew rate	80% to 20% reference points, Figure 4	0.7	1		V/ns
t_C	Cycle time LS_CLK,	Figure 6	1.61	1.67		ns
$t_{W(H)}$	Pulse duration DCLK high	50% to 50% reference points, Figure 6	0.71			ns
$t_{W(L)}$	Pulse duration DCLK low	50% to 50% reference points, Figure 6	0.71			ns
t_{SU}	Setup time	D(0:3) valid before DCLK ↑ or DCLK ↓, Figure 6				
t_H	Hold time	D(0:3) valid after DCLK ↑ or DCLK ↓, Figure 6				
t_{WINDOW}	Window time	Setup time + Hold time, Figure 6,Figure 7			0.3	ns
$t_{LVDS-ENABLE+REFGEN}$	Power-up receiver(4)				2000	ns

(1) Specification is for LS_CLK and LS_WDATA pins. Refer to LPSDR input rise slew rate and fall slew rate in Figure 3.
(2) Specification is for DMD_DEN_ARSTZ pin. Refer to LPSDR input rise and fall slew rate in Figure 3.
(3) Window time derating example: 0.5-V/ns slew rate increases the window time by 0.7 ns, from 3 to 3.7 ns.
(4) Specification is for SubLVDS receiver time only and does not take into account commanding and latency after commanding.

Copyright © 2015, Texas Instruments Incorporated

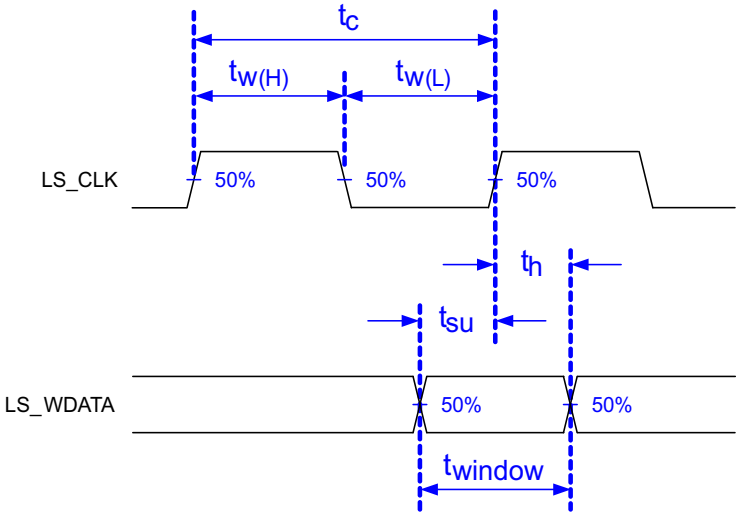

Low-speed interface is LPSDR and adheres to the *Electrical Characteristics* and AC/DC Operating Conditions table in JEDEC Standard No. 209B, *Low Power Double Data Rate (LPDDR)* JESD209B.

Figure 2. LPSDR Switching Parameters

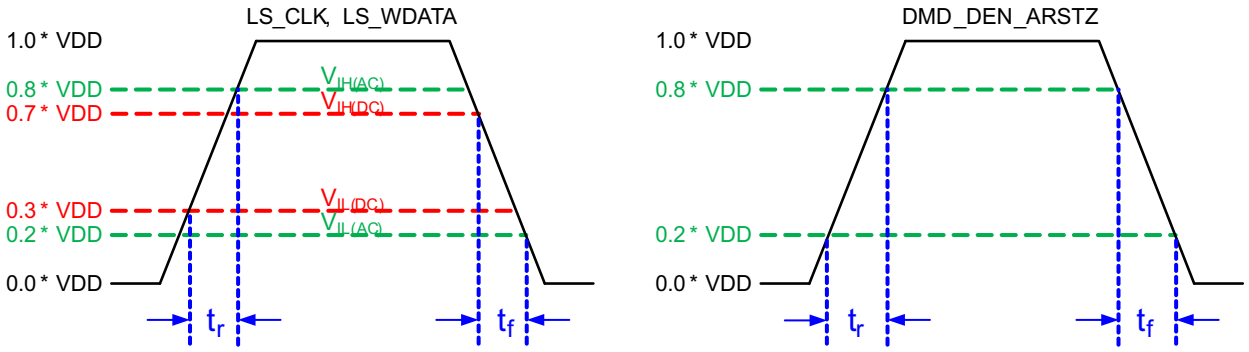

Figure 3. LPSDR Input Rise and Fall Slew Rate

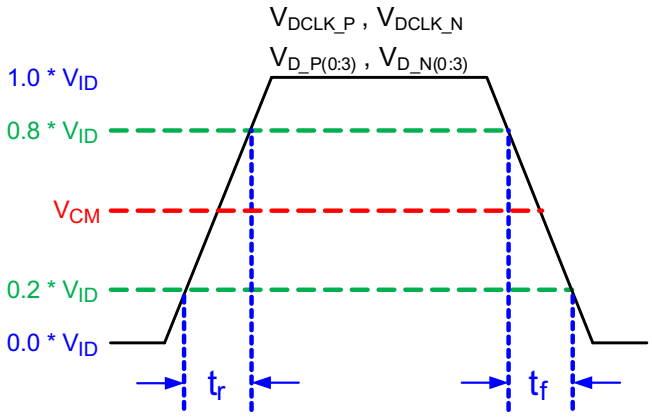

Figure 4. SubLVDS Input Rise and Fall Slew Rate

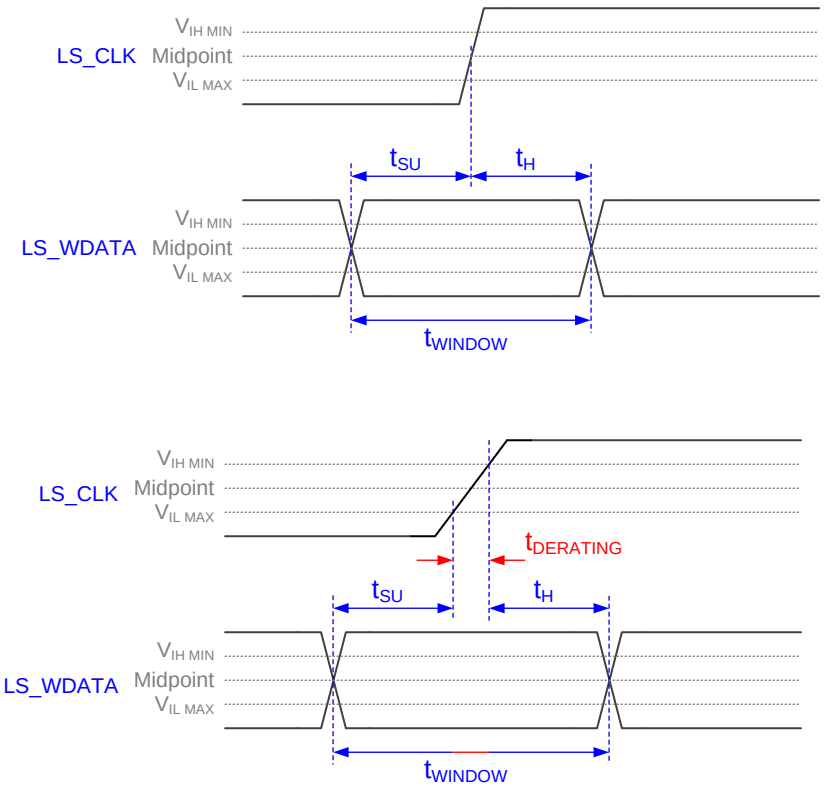

Figure 5. Window Time Derating Concept

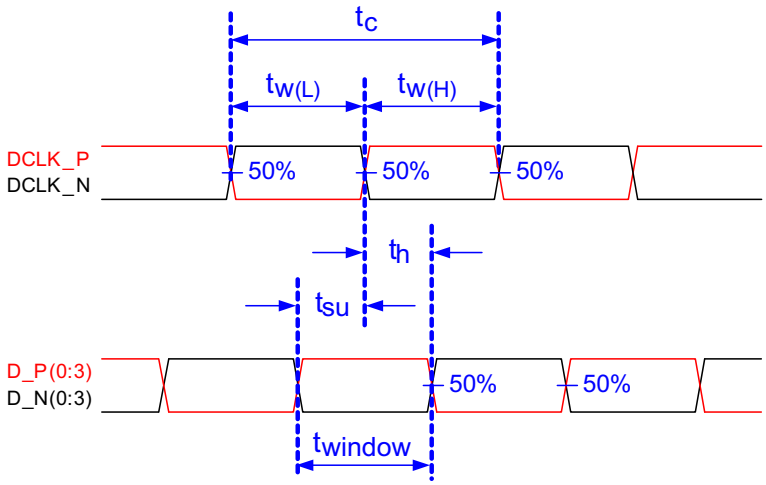

Figure 6. SubLVDS Switching Parameters

Copyright © 2015, Texas Instruments Incorporated

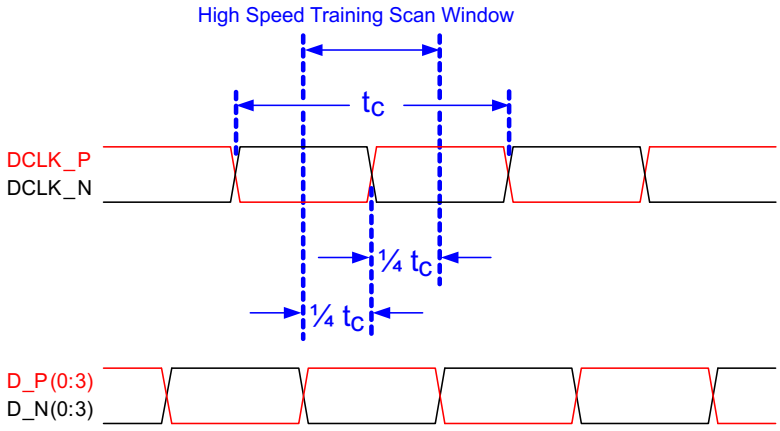

Note: Refer to *High-Speed Interface* for details.

Figure 7. High-Speed Training Scan Window

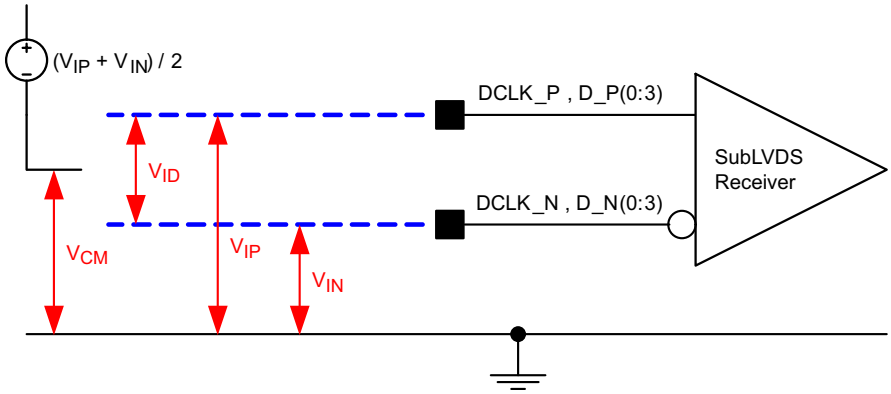

Figure 8. SubLVDS Voltage Parameters

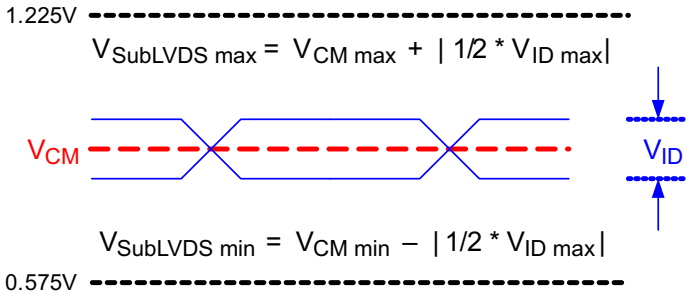

Figure 9. SubLVDS Waveform Parameters

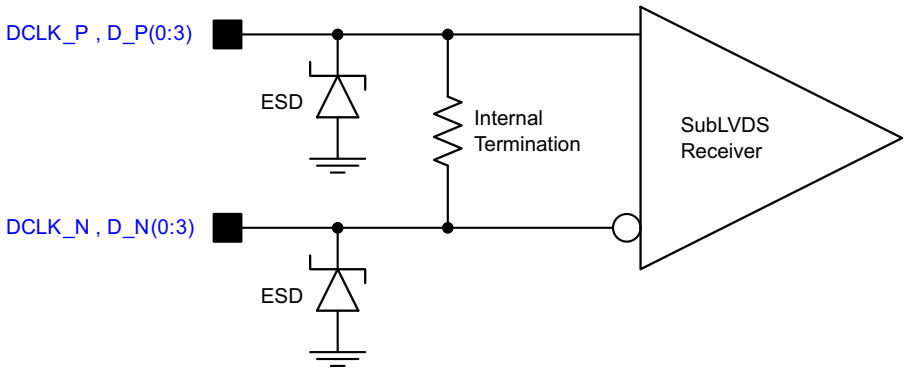

Figure 10. SubLVDS Equivalent Input Circuit

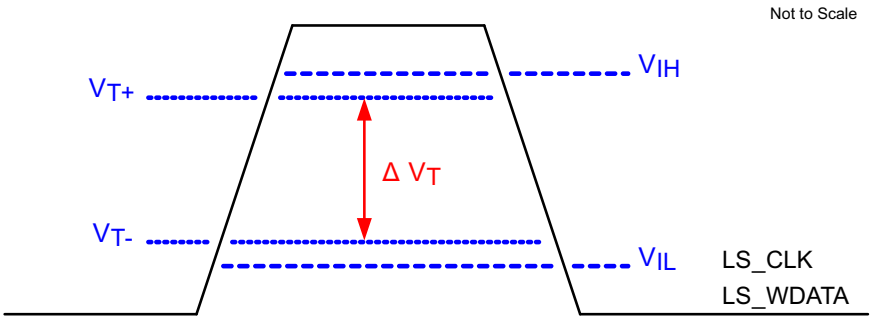

Figure 11. LPSDR Input Hysteresis

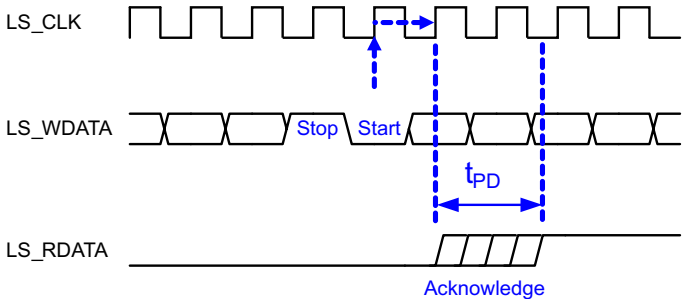

Figure 12. LPSDR Read Out

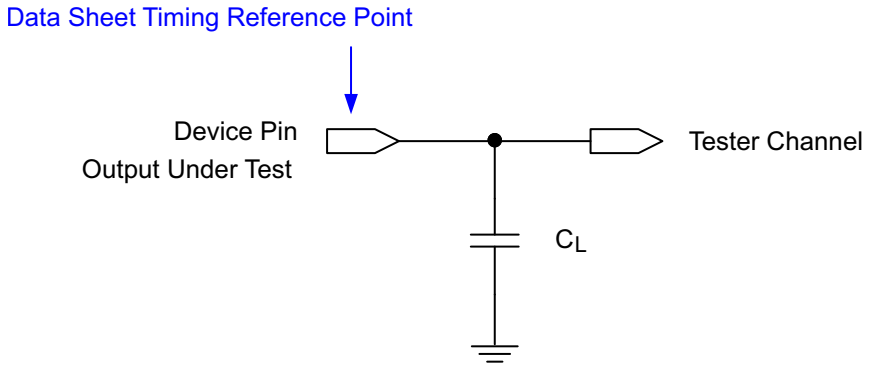

See *Timing* for more information.

Figure 13. Test Load Circuit for Output Propagation Measurement

Copyright © 2015, Texas Instruments Incorporated

6.8 Switching Characteristics(1)

Over operating free-air temperature range (unless otherwise noted)

PARAMETER		TEST CONDITIONS	MIN	TYP	MAX	UNIT
t_{PD}	Output propagation, Clock to Q, rising edge of LS_CLK input to LS_RDATA output. Figure 12	C_L = 5 pF			11.1	ns
		C_L = 10 pF			11.3	ns
		C_L = 85 pF			15	ns
	Slew rate, LS_RDATA		0.5			V/ns
	Output duty cycle distortion, LS_RDATA		40%		60%	

(1) Device electrical characteristics are over *Recommended Operating Conditions* unless otherwise noted.

6.9 System Mounting Interface Loads

PARAMETER	MIN	NOM	MAX	UNIT
Maximum system mounting interface load to be applied to the:				
• Connector area (see Figure 14)			45	N
• DMD mounting area uniformly distributed over 4 areas (see Figure 14)			100	N

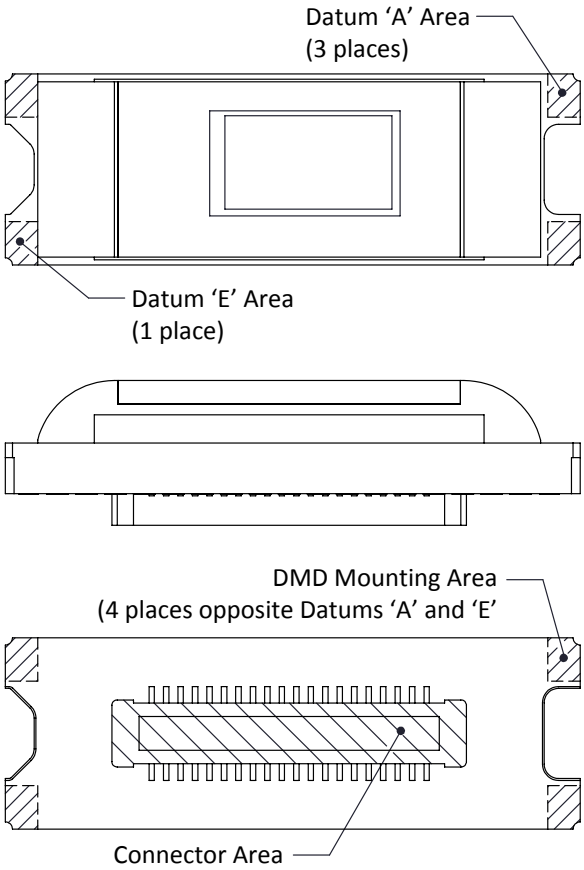

Figure 14. System Interface Loads

6.10 Physical Characteristics of the Micromirror Array

			VALUE	UNIT
	Number of active columns	See Figure 15	854	micromirrors
	Number of active rows	See Figure 15	480	micromirrors
ε	Micromirror (pixel) pitch	See Figure 16	5.4	µm
	Micromirror active array width	Micromirror pitch × number of active columns; see Figure 15	4.6116	mm
	Micromirror active array height	Micromirror pitch × number of active rows; see Figure 15	2.592	mm
	Micromirror active border	Pond of micromirror (POM) (1)	20	micromirrors/side

(1) The structure and qualities of the border around the active array includes a band of partially functional micromirrors called the POM. These micromirrors are structurally and/or electrically prevented from tilting toward the bright or ON state, but still require an electrical bias to tilt toward OFF.

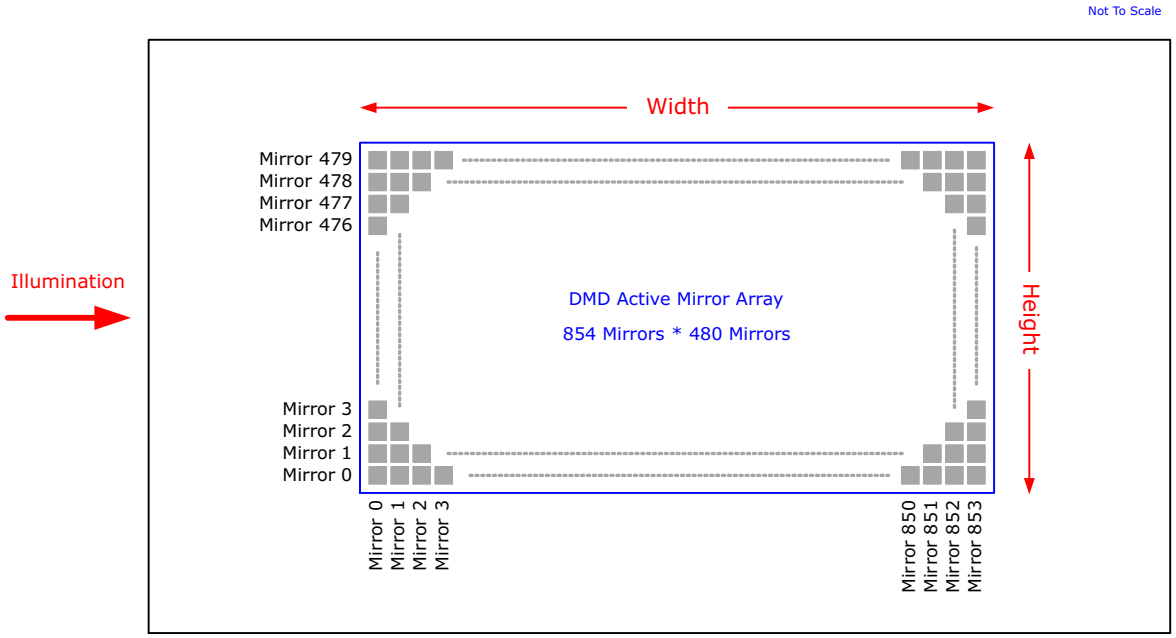

Figure 15. Micromirror Array Physical Characteristics

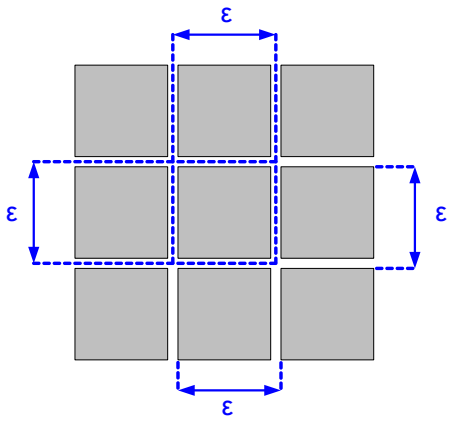

Figure 16. Mirror (Pixel) Pitch

Copyright © 2015, Texas Instruments Incorporated

6.11 Micromirror Array Optical Characteristics

PARAMETER	TEST CONDITIONS	MIN	NOM	MAX	UNIT
Micromirror tilt angle	DMD landed state(1)		17		°
Micromirror tilt angle tolerance(1) (2) (3) (4) (5)		–1		1	°
Micromirror tilt direction(6) (7)	Landed ON state		180		°
	Landed OFF state		270		
Micromirror crossover time	Typical Performance		1.5	4	µs
Micromirror switching time	Typical Performance			6	
Number of out-of-specification micromirrors(8)	Adjacent micromirrors			0	micromirrors
	Non-adjacent micromirrors			10	

(1) Measured relative to the plane formed by the overall micromirror array.
(2) Additional variation exists between the micromirror array and the package datums.
(3) Represents the landed tilt angle variation relative to the nominal landed tilt angle.
(4) Represents the variation that can occur between any two individual micromirrors, located on the same device or located on different devices.
(5) For some applications, it is critical to account for the micromirror tilt angle variation in the overall system optical design. With some system optical designs, the micromirror tilt angle variation within a device may result in perceivable non-uniformities in the light field reflected from the micromirror array. With some system optical designs, the micromirror tilt angle variation between devices may result in colorimetry variations, system efficiency variations or system contrast variations.
(6) When the micromirror array is landed (not parked), the tilt direction of each individual micromirror is dictated by the binary contents of the CMOS memory cell associated with each individual micromirror. A binary value of 1 results in a micromirror landing in the ON State direction. A binary value of 0 results in a micromirror landing in the OFF State direction.
(7) Micromirror tilt direction is measured as in a typical polar coordinate system: measuring counter-clockwise from a 0° reference which is aligned with the +X Cartesian axis.
(8) An out-of-specification micromirror is defined as a micromirror that is unable to transition between the two landed states within the specified Micromirror Switching Time.

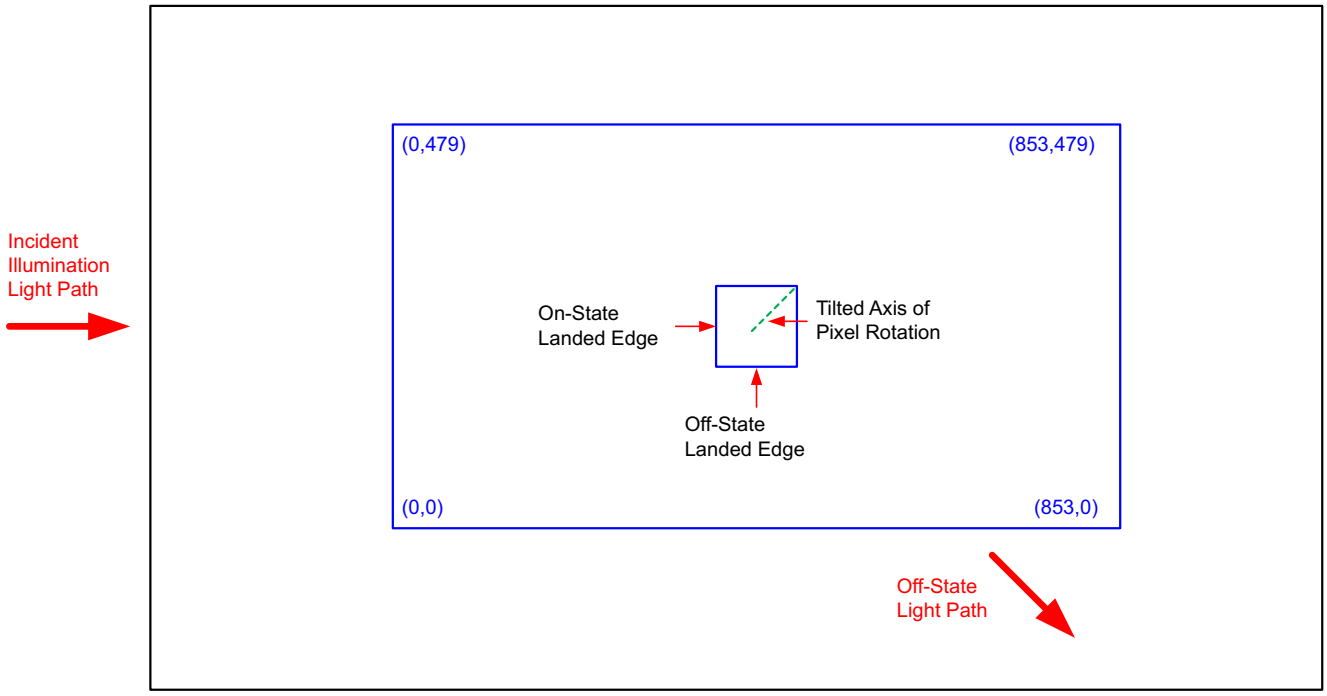

Figure 17. Landed Pixel Orientation and Tilt

6.12 Window Characteristics

PARAMETER (1)		MIN	NOM	MAX	UNIT
Window material designation			Corning Eagle XG		
Window refractive index	at wavelength 546.1 nm		1.5119		
Window aperture (2)				See (2)	
Illumination overfill (3)				See (3)	
Window transmittance, single-pass through both surfaces and glass	Minimum within the wavelength range 700 to 2000 nm. at 0° angle of incidence.	92	96		%
Window transmittance, single-pass through both surfaces and glass	Minimum within the wavelength range 2000 to 2500 nm. at 0° angle of incidence.	85	90		%

(1) See *Window Characteristics and Optics* for more information.
(2) See the package mechanical characteristics for details regarding the size and location of the window aperture.
(3) The active area of the DLP2010NIR device is surrounded by an aperture on the inside of the DMD window surface that masks structures of the DMD device assembly from normal view. The aperture is sized to anticipate several optical conditions. Overfill light illuminating the area outside the active array can scatter and create adverse effects to the performance of an end application using the DMD. The illumination optical system should be designed to limit light flux incident outside the active array to less than 10% of the average flux level in the active area. Depending on the particular system's optical architecture and assembly tolerances, the amount of overfill light on the outside of the active array may cause system performance degradation.

6.13 Chipset Component Usage Specification

The DLP2010NIR is a component of one or more DLP chipsets. Reliable function and operation of the DLP2010NIR requires that it be used in conjunction with the other components of the applicable DLP chipset, including those components that contain or implement TI DMD control technology. TI DMD control technology is the TI technology and devices for operating or controlling a DLP DMD.

NOTE

TI assumes no responsibility for image quality artifacts or DMD failures caused by optical system operating conditions exceeding limits described previously.

6.14 Typical Characteristics

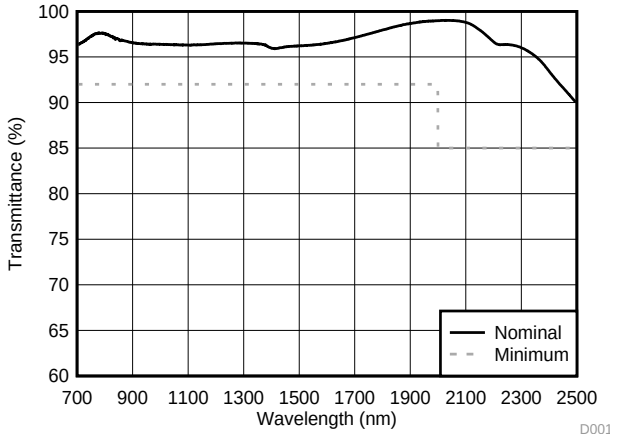

Figure 18. DLP2010NIR DMD Window Transmittance

Copyright © 2015, Texas Instruments Incorporated

7 Detailed Description

7.1 Overview

The DLP2010NIR is a 0.2 inch diagonal spatial light modulator designed for near-infrared applications. Pixel array size is 854 columns by 480 rows in a square grid pixel arrangement. The electrical interface is Sub Low Voltage Differential Signaling (SubLVDS) data.

DLP2010NIR is one device in a chipset, which includes the DLP2010NIR DMD, the DLPC150 controller and the DLPA200X (DLPA2000 or DLPA2005) PMIC. To ensure reliable operation, the DLP2010NIR DMD must always be used with a DLPC150 controller and a DLPA200X PMIC.

7.2 Functional Block Diagram

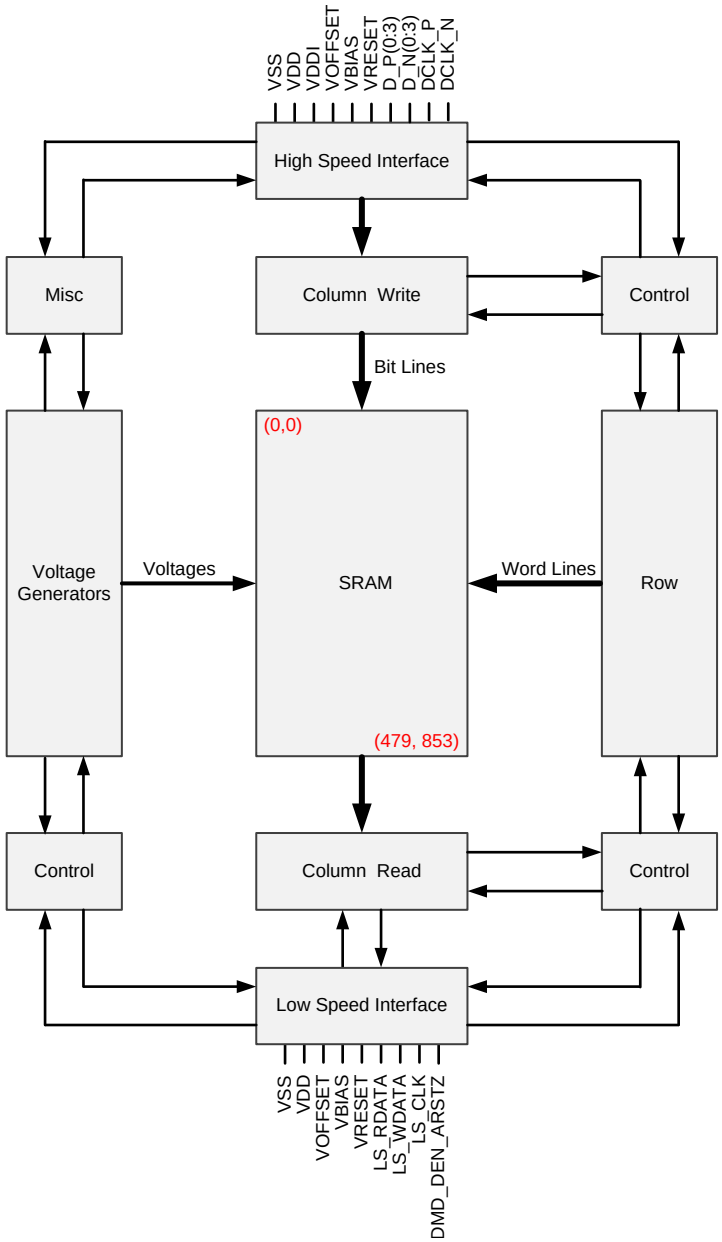

Details omitted for clarity.

7.3 Feature Description

7.3.1 Power Interface

The power management IC, DLPA200X, contains 3 regulated DC supplies for the DMD reset circuitry: VBIAS, VRESET and VOFFSET, as well as the 2 regulated DC supplies for the DLPC150 controller.

7.3.2 Low-Speed Interface

The Low Speed Interface handles instructions that configure the DMD and control reset operation. LS_CLK is the low–speed clock, and LS_WDATA is the low speed data input.

7.3.3 High-Speed Interface

The purpose of the high-speed interface is to transfer pixel data rapidly and efficiently, making use of high speed DDR transfer and compression techniques to save power and time. The high-speed interface is composed of differential SubLVDS receivers for inputs, with a dedicated clock.

7.3.4 Timing

The data sheet provides timing at the device pin. For output timing analysis, the tester pin electronics and its transmission line effects must be taken into account. Figure 13 shows an equivalent test load circuit for the output under test. Timing reference loads are not intended as a precise representation of any particular system environment or depiction of the actual load presented by a production test. System designers should use IBIS or other simulation tools to correlate the timing reference load to a system environment. The load capacitance value stated is only for characterization and measurement of AC timing signals. This load capacitance value does not indicate the maximum load the device is capable of driving.

7.4 Device Functional Modes

DMD functional modes are controlled by the DLPC150 controller. See the DLPC150 controller data sheet or contact a TI applications engineer.

7.5 Window Characteristics and Optics

NOTE

TI assumes no responsibility for image quality artifacts or DMD failures caused by optical system operating conditions exceeding limits described previously.

7.5.1 Optical Interface and System Image Quality

TI assumes no responsibility for end-equipment optical performance. Achieving the desired end-equipment optical performance involves making trade-offs between numerous component and system design parameters. Although it is not possible to anticipate every conceivable application, projector image quality and optical performance is contingent on compliance to the optical system operating conditions described in the following sections:

7.5.1.1 Numerical Aperture and Stray Light Control

The angle defined by the numerical aperture of the illumination and projection optics at the DMD optical area should be the same. This angle should not exceed the nominal device mirror tilt angle unless appropriate apertures are added in the illumination and/or projection pupils to block out flat-state and stray light from the projection lens. The mirror tilt angle defines DMD capability to separate the ON optical path from any other light path, including undesirable flat–state specular reflections from the DMD window, DMD border structures, or other system surfaces near the DMD such as prism or lens surfaces. If the numerical aperture exceeds the mirror tilt angle, or if the projection numerical aperture angle is more than two degrees larger than the illumination numerical aperture angle, objectionable artifacts in the display's border and/or active area could occur and affect system performance.

Copyright © 2015, Texas Instruments Incorporated

Window Characteristics and Optics (continued)

7.5.1.2 Pupil Match

TI's optical and image quality specifications assume that the exit pupil of the illumination optics is nominally centered within 2° of the entrance pupil of the projection optics. Misalignment of pupils can create objectionable artifacts in the display's border and/or active area, which may require additional system apertures to control, especially if the numerical aperture of the system exceeds the pixel tilt angle.

7.5.1.3 Illumination Overfill

The active area of the device is surrounded by an aperture on the inside DMD window surface that masks structures of the DMD chip assembly from normal view, and is sized to anticipate several optical operating conditions. Overfill light illuminating the window aperture can create artifacts from the edge of the window aperture opening and other surface anomalies that may be visible on the screen. The illumination optical system should be designed to limit light flux incident anywhere on the window aperture from exceeding approximately 10% of the average flux level in the active area. Depending on the particular system's optical architecture, overfill light may have to be further reduced below the suggested 10% level in order to be acceptable.

7.6 Micromirror Array Temperature Calculation

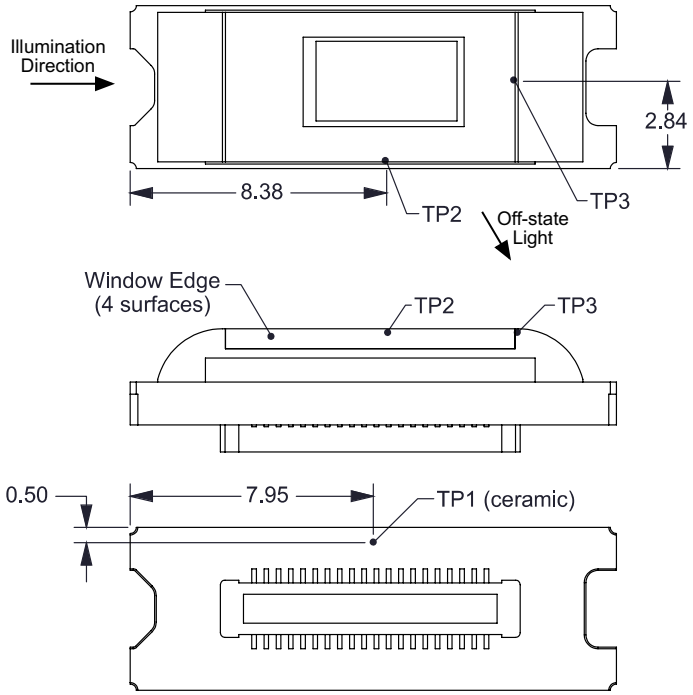

Figure 19. DMD Thermal Test Points

Micromirror array temperature can be computed analytically from measurement points on the outside of the package, the ceramic package thermal resistance, the electrical power dissipation, and the illumination heat load. The relationship between micromirror array temperature and the reference ceramic temperature is provided by the following equations:

$$T_{ARRAY} = T_{CERAMIC} + (Q_{ARRAY} \times R_{ARRAY-TO-CERAMIC}) \quad (1)$$

$$Q_{ARRAY} = Q_{ELECTRICAL} + Q_{ILLUMINATION} \quad (2)$$

$$Q_{ILLUMINATION} = (A_{ILLUMINATION} \times P_{NIR} \text{ X DMD absorption factor})$$

where

- T_{ARRAY} = Computed DMD array temperature (°C)
- $T_{CERAMIC}$ = Measured ceramic temperature (°C), TP1 location in Figure 19
- $R_{ARRAY-TO-CERAMIC}$ = DMD package thermal resistance from array to outside ceramic (°C/W) specified in *Thermal Information*

Copyright © 2015, Texas Instruments Incorporated

Micromirror Array Temperature Calculation (continued)

- Q_{ARRAY} = Total DMD power; electrical, specified in *Electrical Characteristics* , plus absorbed (calculated) (W)
- $Q_{ELECTRICAL}$ = Nominal DMD electrical power dissipation (W), specified in *Electrical Characteristics*
- $A_{ILLUMINATION}$ = Illumination area (assumes 83.7% on the active array and 16.3% overfill)
- P_{NIR} = Illumination Power Density (W/cm^2) (3)

Electrical power dissipation of the DMD is variable and depends on the voltages, data rates and operating frequencies. Refer to the specifications in *Electrical Characteristics*. Absorbed power from the illumination source is variable and depends on the operating state of the mirrors and the intensity of the light source. The DMD absorption constant of 0.42 assumes nominal operation with an illumination distribution of 83.7% on the DMD active array, and 16.3% on the DMD array border and window aperture.

A sample calculation is detailed below:

$T_{CERAMIC}$ = 35 °C, assumed system measurement; see *Recommended Operating Conditions* for specification limits

P_{NIR}= 2 W/cm^2

$Q_{ELECTRICAL}$ = 0.0908 W; See the table notes in *Recommended Operating Conditions* for details.

$A_{ILLUMINATION}$ = 0.143 cm^2

$Q_{ARRAY} = Q_{ELECTRICAL} + (Q_{ILLUMINATION}$ X DMD absoprtion factor) = 0.0908 W + (2 W/cm^2 X 0.143 cm^2 X 0.42) = 0.211 W

T_{ARRAY} = 35 °C + (0.211 W × 7.9°C/W) = 36.67 °C

7.7 Micromirror Landed-On/Landed-Off Duty Cycle

7.7.1 Definition of Micromirror Landed-On/Landed-Off Duty Cycle

The micromirror landed-on/landed-off duty cycle (landed duty cycle) denotes the amount of time (as a percentage) that an individual micromirror is landed in the On state versus the amount of time the same micromirror is landed in the Off state.

As an example, a landed duty cycle of 100/0 indicates that the referenced pixel is in the On state 100% of the time (and in the Off state 0% of the time), whereas 0/100 would indicate that the pixel is in the Off state 100% of the time. Likewise, 50/50 indicates that the pixel is On 50% of the time and Off 50% of the time.

Note that when assessing landed duty cycle, the time spent switching from one state (ON or OFF) to the other state (OFF or ON) is considered negligible and is thus ignored.

Since a micromirror can only be landed in one state or the other (On or Off), the two numbers (percentages) always add to 100.

7.7.2 Landed Duty Cycle and Useful Life of the DMD

Knowing the long-term average landed duty cycle (of the end product or application) is important because subjecting all (or a portion) of the DMD's micromirror array (also called the active array) to an asymmetric landed duty cycle for a prolonged period of time can reduce the DMD's usable life.

Note that it is the symmetry/asymmetry of the landed duty cycle that is of relevance. The symmetry of the landed duty cycle is determined by how close the two numbers (percentages) are to being equal. For example, a landed duty cycle of 50/50 is perfectly symmetrical whereas a landed duty cycle of 100/0 or 0/100 is perfectly asymmetrical.

7.7.3 Landed Duty Cycle and Operational DMD Temperature

Operational DMD Temperature and Landed Duty Cycle interact to affect the DMD's usable life, and this interaction can be exploited to reduce the impact that an asymmetrical Landed Duty Cycle has on the DMD's usable life. This is quantified in the de-rating curve shown in Figure 1. The importance of this curve is that:

- All points along this curve represent the same usable life.
- All points above this curve represent lower usable life (and the further away from the curve, the lower the

Copyright © 2015, Texas Instruments Incorporated

Micromirror Landed-On/Landed-Off Duty Cycle (continued)

usable life).

- All points below this curve represent higher usable life (and the further away from the curve, the higher the usable life).

In practice, this curve specifies the Maximum Operating DMD Temperature that the DMD should be operated at for a give long-term average Landed Duty Cycle.

7.7.4 Estimating the Long-Term Average Landed Duty Cycle of a Product or Application

During a given period of time, the Landed Duty Cycle of a given pixel follows from the image content being displayed by that pixel.

For example, in binary pattern display with value '1' or when displaying pure-white on a given pixel for a given time period, that pixel will experience a 100/0 Landed Duty Cycle during that time period. Likewise, a binary pattern display with value '0' or when displaying pure-black, the pixel will experience a 0/100 Landed Duty Cycle.

Table 1. Binary Pattern Mode Example: Binary Value and Landed Duty Cycle

BINARY VALUE	LANDED DUTY CYCLE
0	0/100
1	100/0

During a given period of time, the landed duty cycle of a given pixel can be calculated as follows:

Landed Duty Cycle = ∑{Pattern[i]_Binary_Value} / {Total_Patterns} (4)

where

- Pattern[i]_Binary_Value represent a pixel's pattern and its corresponding binary value over all patterns in the pattern sequence: Total_Patterns.

For example, assume a pattern sequence with three patterns using pixel x. In this sequence the first pattern has pixel x on, the second pattern has pixel x off, and the third pattern has pixel x off. Thus, the Landed Duty Cycle is 33%.

Copyright © 2015, Texas Instruments Incorporated

8 Application and Implementation

NOTE

Information in the following applications sections is not part of the TI component specification, and TI does not warrant its accuracy or completeness. TI's customers are responsible for determining suitability of components for their purposes. Customers should validate and test their design implementation to confirm system functionality.

8.1 Application Information

The DMDs are spatial light modulators which reflect incoming light from an illumination source to one of two directions, with the primary direction being into a projection or collection optic. Each application is derived primarily from the optical architecture of the system and the format of the data coming into the DLPC150 controller. The new high tilt pixel in the side illuminated DMD increases device efficiency and enables a compact optical system. The DLP2010NIR DMD can be combined with a grating and single element detector to replace expensive InGaAs linear array detector designs, leading to high performance, cost-effective portable NIR Spectroscopy solutions. Applications of interest include machine vision systems, spectrometers, medical systems, skin analysis, material identification, chemical sensing, infrared projection, and compressive sensing.

DMD power-up and power-down sequencing is strictly controlled by the DLPA2000 or DLPA2005. Refer to *Power Supply Recommendations* for power-up and power-down specifications. DLP2010NIR DMD reliability is only specified when used with DLPC150 controller and DLPA2000 or DLPA2005 PMIC/LED Driver.

8.2 Typical Application

A typical embedded system application using the DLPC150 controller and DLP2010NIR is shown in Figure 20. In this configuration, the DLPC150 controller supports a 24-bit parallel RGB input, typical of LCD interfaces, from an external source or processor. The DLPC150 controller processes the digital input image and converts the data into the format needed by the DLP2010NIR. The DLP2010NIR steers light by setting specific micromirrors to the *on* position, directing light to the detector, while unwanted micromirrors are set to "off" position, directing light away from the detector. The microprocessor sends binary images to the DMD to steer specific wavelengths of light into the detector. The microprocessor uses an analog-to-digital converter to sample the signal received by the detector into a digital value. By sequentially selecting different wavelengths of light and capturing the values at the detector, the microprocessor can then plot a spectral response to the light.

Copyright © 2015, Texas Instruments Incorporated

Typical Application (continued)

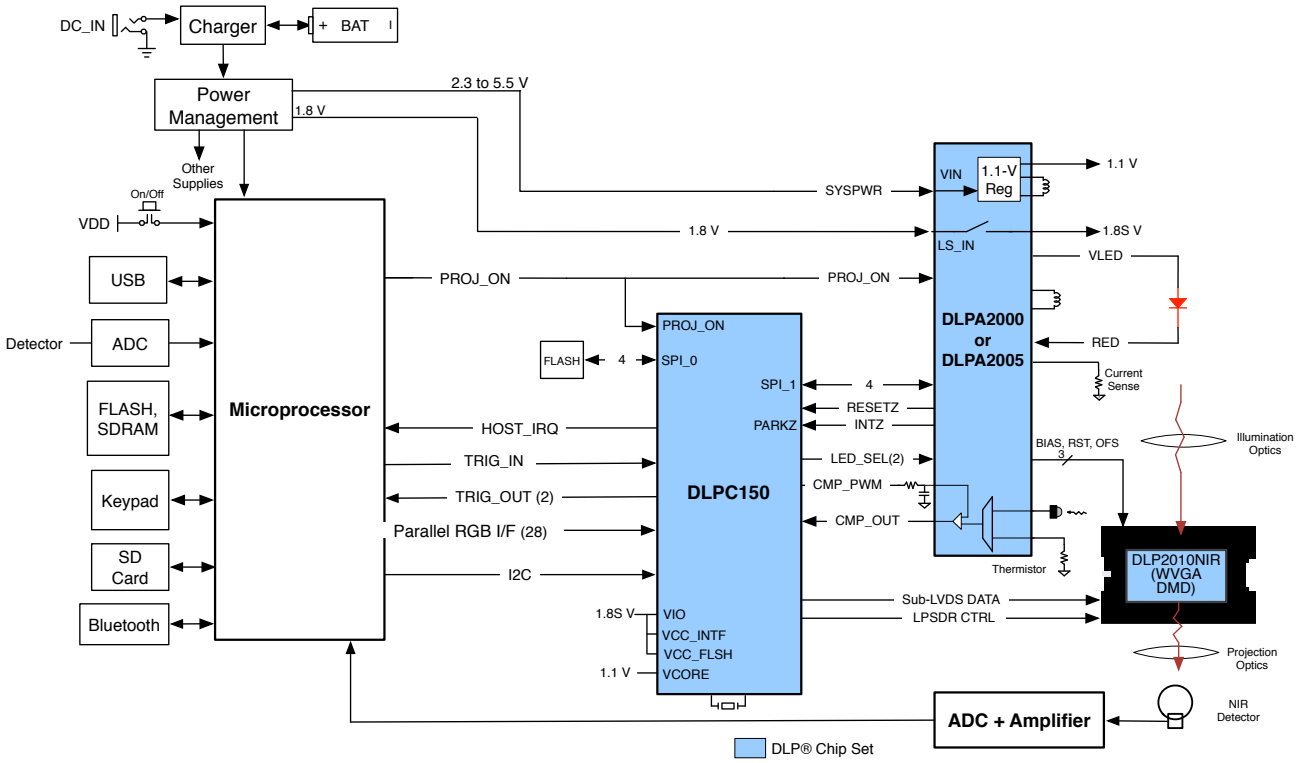

Figure 20. Typical Application Diagram

8.2.1 Design Requirements

All applications using DLP 0.2-inch WVGA chipset require the DLPC150 controller, DLPA2000 or DLPA2005 PMIC, and DLP2010NIR DMD components for operation. The system also requires an external SPI flash memory device loaded with the DLPC150 Configuration and Support Firmware. The chipset has several system interfaces and requires some support circuitry. The following interfaces and support circuitry are required for the DLP2010NIR:

- DMD Interfaces:
  - DLPC150 to DLP2010NIR SubLVDS Digital Data
  - DLPC150 to DLP2010NIR LPSDR Control Interface
- DMD Power:
  - DLPA2000 or DLPA2005 to DLP2010NIR VBIAS Supply
  - DLPA2000 or DLPA2005 to DLP2010NIR VOFFSET Supply
  - DLPA2000 or DLPA2005 to DLP2010NIR VRESET Supply
  - DLPA2000 or DLPA2005 to DLP2010NIR VDDI Supply
  - DLPA2000 or DLPA2005 to DLP2010NIR VDD Supply

The illumination light that is applied to the DMD is typically from an infrared LED or lamp.

8.2.2 Detailed Design Procedure

For connecting together the DLPC150, the DLPA2005, and the DLP2010NIR DMD, see the TI DLP NIRscan Nano EVM reference design schematic.

Copyright © 2015, Texas Instruments Incorporated

Typical Application (continued)

8.2.3 Application Curve

In a reflective spectroscopy application, a broadband light source illuminates a sample and the reflected light spectrum is dispersed onto the DLP2010NIR. A microprocessor in conjunction with the DLPC150 controls individual DLP2010NIR micromirrors to reflect specific wavelengths of light to a single point detector. The microprocessor uses an analog-to-digital converter to sample the signal received by the detector into a digital value. By sequentially selecting different wavelengths of light and capturing the values at the detector, the microprocessor can then plot a spectral response to the light. This systems allows the measurement of the collected light and derive the wavelengths absorbed by the sample. This process leads to the absorption spectrum shown in Figure 21.

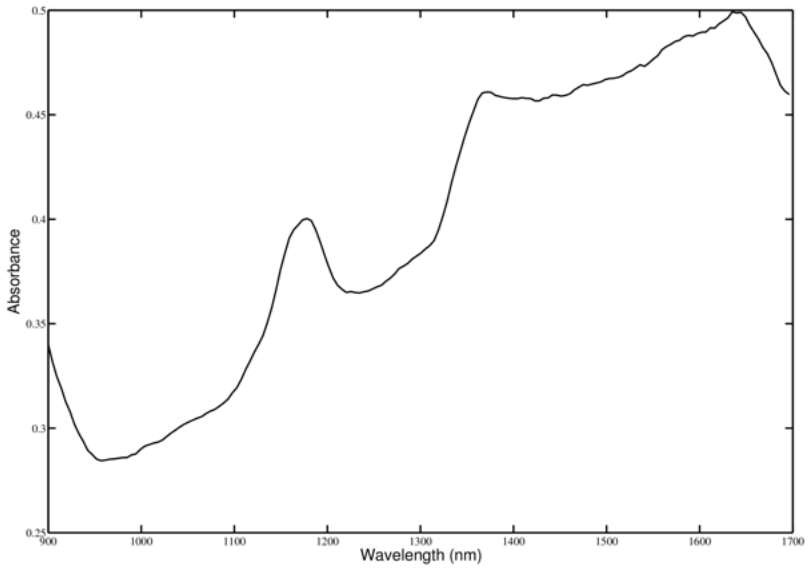

Figure 21. Sample DLP2010NIR Based Spectrometer Output

Copyright © 2015, Texas Instruments Incorporated

9 Power Supply Recommendations

The following power supplies are all required to operate the DMD: VSS, VDD, VDDI, VOFFSET, VBIAS, and VRESET. DMD power-up and power-down sequencing is strictly controlled by the DLPA2000 or DLPA2005 device.

CAUTION

For reliable operation of the DMD, the following power supply sequencing requirements must be followed. Failure to adhere to the prescribed power-up and power-down procedures may affect device reliability.

VDD, VDDI, VOFFSET, VBIAS, and VRESET power supplies have to be coordinated during power-up and power-down operations. Failure to meet any of the below requirements will result in a significant reduction in the DMD's reliability and lifetime. Refer to Figure 23. VSS must also be connected.

9.1 Power Supply Power-Up Procedure

- During power-up, VDD and VDDI must always start and settle before VOFFSET, VBIAS, and VRESET voltages are applied to the DMD.
- During power-up, it is a strict requirement that the delta between VBIAS and VOFFSET must be within the specified limit shown in *Recommended Operating Conditions*. Refer to Table 2 and the *Layout Example* for power-up delay requirements.
- During power-up, the DMD's LPSDR input pins shall not be driven high until after VDD and VDDI have settled at operating voltage.
- During power-up, there is no requirement for the relative timing of VRESET with respect to VOFFSET and VBIAS. Power supply slew rates during power-up are flexible, provided that the transient voltage levels follow the requirements listed previously and in *Figure 22*.

9.2 Power Supply Power-Down Procedure

- Power-down sequence is the reverse order of the previous power-up sequence. VDD and VDDI must be supplied until after VBIAS, VRESET, and VOFFSET are discharged to within 4 V of ground.
- During power-down, it is not mandatory to stop driving VBIAS prior to VOFFSET, but it is a strict requirement that the delta between VBIAS and VOFFSET must be within the specified limit shown in *Recommended Operating Conditions* (Refer to Note 2 for Figure 22).
- During power-down, the DMD's LPSDR input pins must be less than VDDI, the specified limit shown in *Recommended Operating Conditions*.
- During power-down, there is no requirement for the relative timing of VRESET with respect to VOFFSET and VBIAS.
- Power supply slew rates during power-down are flexible, provided that the transient voltage levels follow the requirements listed previously and in Figure 22.

Copyright © 2015, Texas Instruments Incorporated

9.3 Power Supply Sequencing Requirements

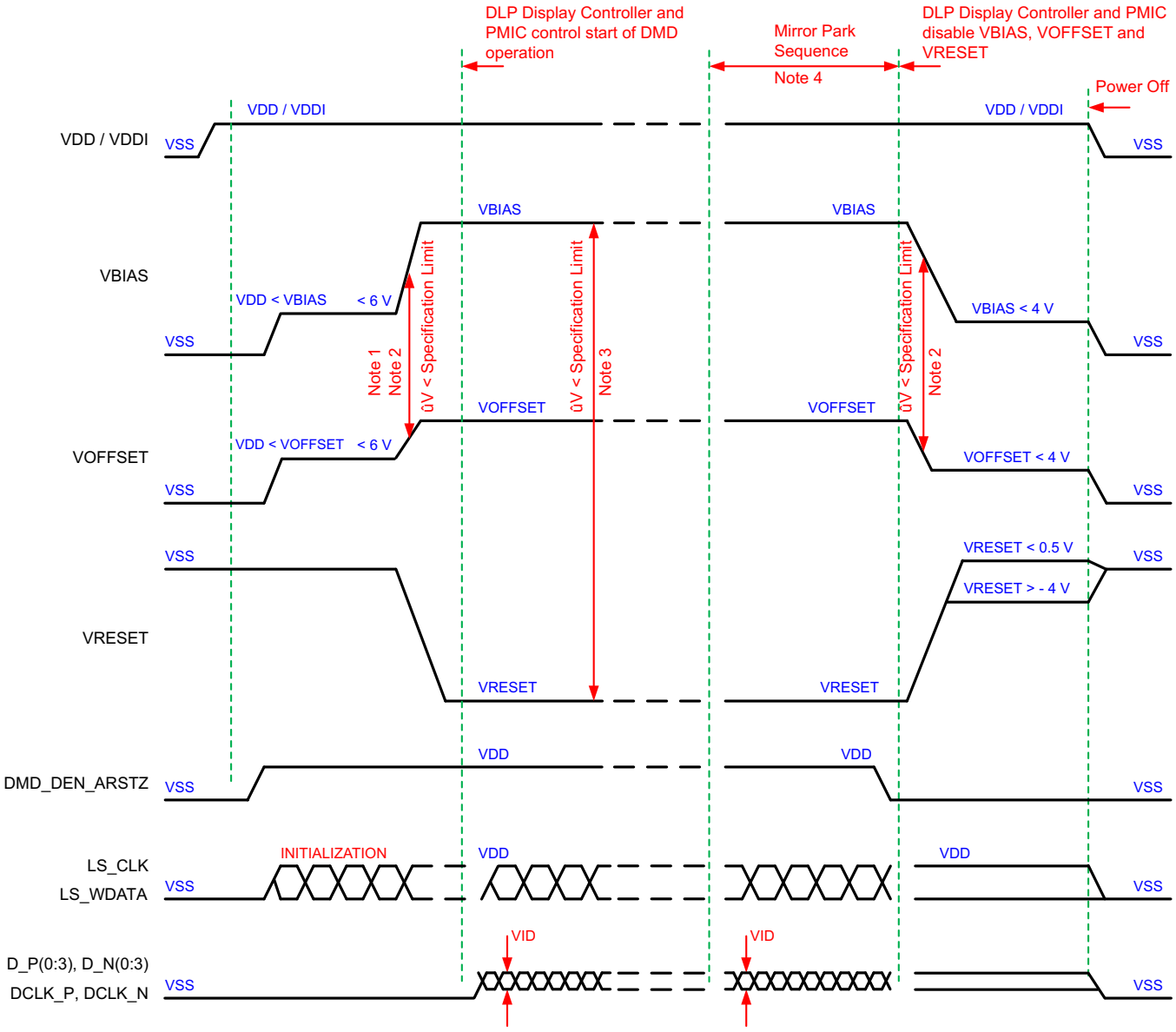

(1) Refer to Table 2 and Figure 23 for critical power-up sequence delay requirements.

(2) To prevent excess current, the supply voltage delta |VBIAS – VOFFSET| must be less than specified in *Recommended Operating Conditions*. OEMs may find that the most reliable way to ensure this is to power VOFFSET prior to VBIAS during power-up and to remove VBIAS prior to VOFFSET during power-down. Refer to Table 2 and Figure 23 for power-up delay requirements

(3) To prevent excess current, the supply voltage delta |VBIAS – VRESET| must be less than specified limit shown in *Recommended Operating Conditions*.

(4) When system power is interrupted, the ASIC driver initiates hardware power-down that disables VBIAS, VRESET and VOFFSET after the Micromirror Park Sequence. Software power-down disables VBIAS, VRESET, and VOFFSET after the Micromirror Park Sequence through software control.

(5) Drawing is not to scale and details are omitted for clarity.

Figure 22. Power Supply Sequencing Requirements (Power Up and Power Down)

Copyright © 2015, Texas Instruments Incorporated

Power Supply Sequencing Requirements (continued)

Table 2. Power-Up Sequence Delay Requirement

PARAMETER		MIN	UNIT
t_{DELAY}	Delay requirement from VOFFSET power up to VBIAS power up	2	ms
V_{OFFSET}	Supply voltage level during power–up sequence delay (see Figure 23)	6	V
V_{BIAS}	Supply voltage level during power–up sequence delay (see Figure 23)	6	V

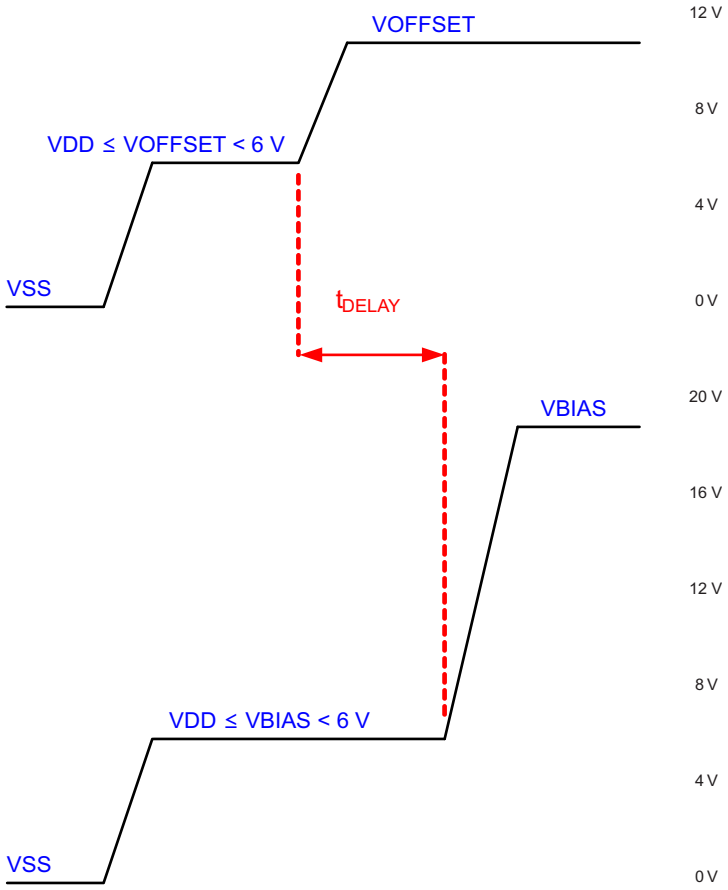

A. Refer to Table 2 for VOFFSET and VBIAS supply voltage levels during power-up sequence delay.

Figure 23. Power-Up Sequence Delay Requirement

10 Layout

10.1 Layout Guidelines

There are no specific layout guidelines for the DMD as typically DMD is connected using a board to board connector to a flex cable. Flex cable provides the interface of data and Ctrl signals between the DLPC343x controller and the DLP2010 DMD. For detailed layout guidelines refer to the layout design files. Some layout guideline for the flex cable interface with DMD are:

- Match lengths for the LS_WDATA and LS_CLK signals.
- Minimize vias, layer changes, and turns for the HS bus signals. Refer Figure 24.
- Minimum of 100-nF decoupling capacitor close to VBIAS. Capacitor C4 in Figure 25.
- Minimum of 100-nF decoupling capacitor close to VRST. Capacitor C6 in Figure 25.
- Minimum of 220-nF decoupling capacitor close to VOFS. Capacitor C7 in Figure 25.
- Optional minimum 200- to 220-nF decoupling capacitor to meet the ripple requirements of the DMD. C5 in Figure 25.
- Minimum of 100-nF decoupling capacitor close to Vcci. Capacitor C1 in Figure 25.
- Minimum of 100-nF decoupling capacitor close to both groups of Vcc pins, for a total of 200 nF for Vcc. Capacitor C2/C3 in Figure 25.

10.2 Layout Example

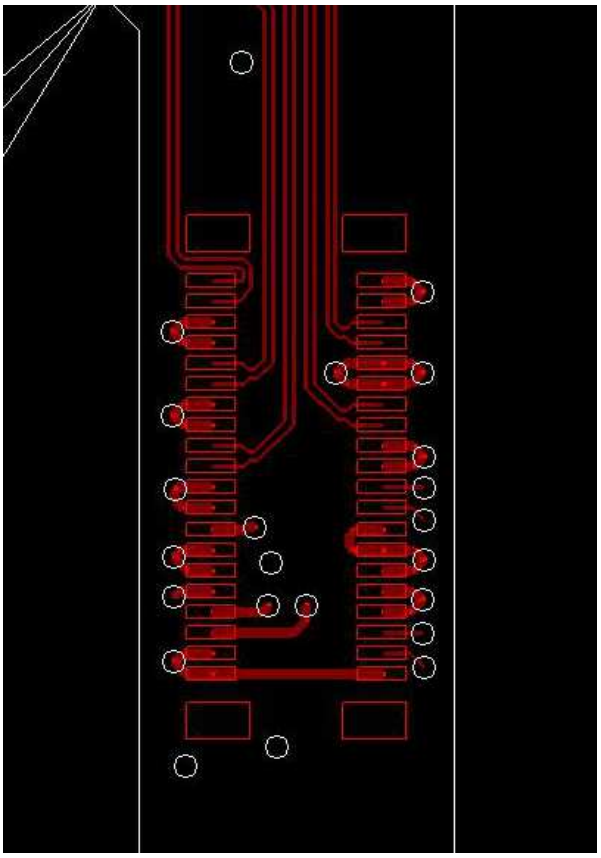

Figure 24. High-Speed (HS) Bus Connections

Copyright © 2015, Texas Instruments Incorporated

Layout Example (continued)

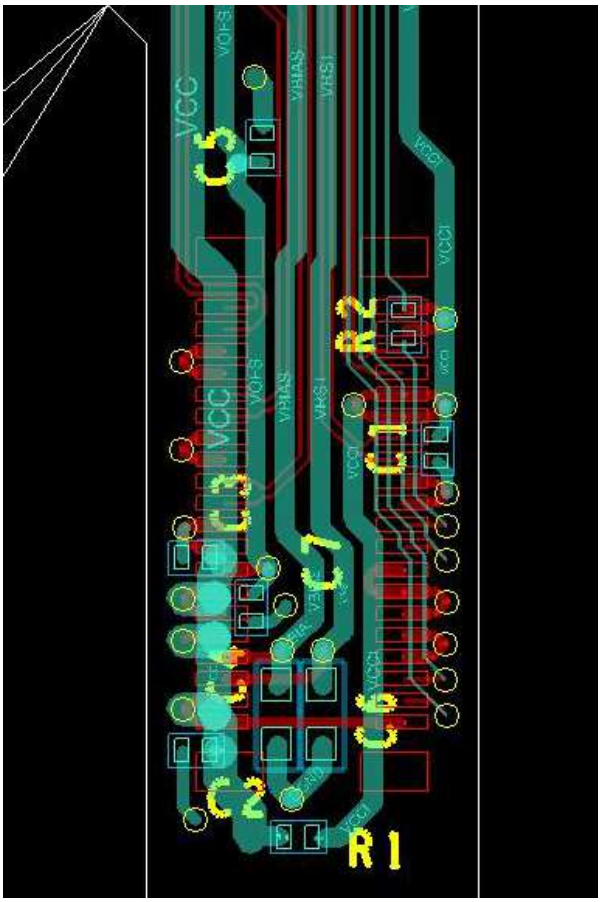

Figure 25. Power Supply Connections

11 Device and Documentation Support

11.1 Device Support

11.1.1 Device Nomenclature

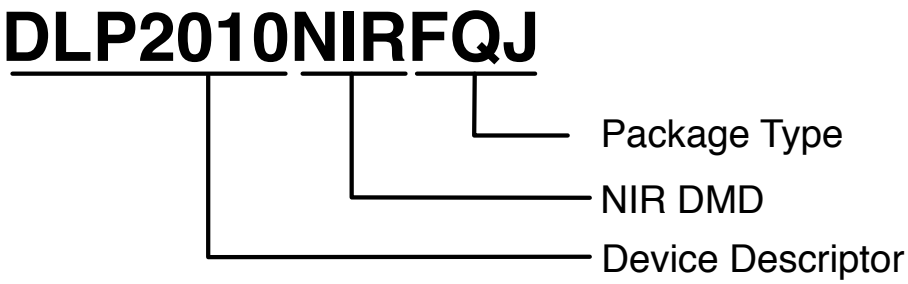

Figure 26. Part Number Description

11.1.2 Device Markings

Device Marking will include the human–readable character string GHJJJJK VVVV on the electrical connector. GHJJJJK is the lot trace code. VVVV is a 4 character encoded device part number

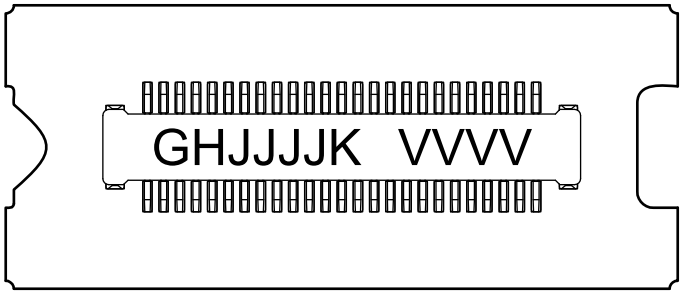

Figure 27. DMD Marking

11.2 Related Links

The table below lists quick access links. Categories include technical documents, support and community resources, tools and software, and quick access to sample or buy.

Table 3. Related Links

PARTS	PRODUCT FOLDER	SAMPLE & BUY	TECHNICAL DOCUMENTS	TOOLS & SOFTWARE	SUPPORT & COMMUNITY
DLPC150	Click here	Click here	Click here	Click here	Click here
DLPA2000	Click here	Click here	Click here	Click here	Click here
DLPA2005	Click here	Click here	Click here	Click here	Click here

Copyright © 2015, Texas Instruments Incorporated

11.3 Community Resources

The following links connect to TI community resources. Linked contents are provided "AS IS" by the respective contributors. They do not constitute TI specifications and do not necessarily reflect TI's views; see TI's Terms of Use.

TI E2E™ Online Community ***TI's Engineer-to-Engineer (E2E) Community.*** Created to foster collaboration among engineers. At e2e.ti.com, you can ask questions, share knowledge, explore ideas and help solve problems with fellow engineers.

Design Support ***TI's Design Support*** Quickly find helpful E2E forums along with design support tools and contact information for technical support.

11.4 Trademarks

E2E is a trademark of Texas Instruments.
DLP is a registered trademark of Texas Instruments.
All other trademarks are the property of their respective owners.

11.5 Electrostatic Discharge Caution



These devices have limited built-in ESD protection. The leads should be shorted together or the device placed in conductive foam during storage or handling to prevent electrostatic damage to the MOS gates.

11.6 Glossary

SLYZ022 — *TI Glossary*.

This glossary lists and explains terms, acronyms, and definitions.

12 Mechanical, Packaging, and Orderable Information

The following pages include mechanical, packaging, and orderable information. This information is the most current data available for the designated devices. This data is subject to change without notice and revision of this document. For browser-based versions of this data sheet, refer to the left-hand navigation.

Copyright © 2015, Texas Instruments Incorporated

PACKAGING INFORMATION

Orderable Device	Status (1)	Package Type	Package Drawing	Pins	Package Qty	Eco Plan (2)	Lead/Ball Finish (6)	MSL Peak Temp (3)	Op Temp (°C)	Device Marking (4/5)	Samples
DLP2010NIRFQJ	ACTIVE	CLGA	FQJ	40	1	RoHS & Green	Call TI	Level-1-NC-NC			Samples

(1) The marketing status values are defined as follows:
ACTIVE: Product device recommended for new designs.
LIFEBUY: TI has announced that the device will be discontinued, and a lifetime-buy period is in effect.
NRND: Not recommended for new designs. Device is in production to support existing customers, but TI does not recommend using this part in a new design.
PREVIEW: Device has been announced but is not in production. Samples may or may not be available.
OBSOLETE: TI has discontinued the production of the device.

(2) **RoHS:** TI defines "RoHS" to mean semiconductor products that are compliant with the current EU RoHS requirements for all 10 RoHS substances, including the requirement that RoHS substance do not exceed 0.1% by weight in homogeneous materials. Where designed to be soldered at high temperatures, "RoHS" products are suitable for use in specified lead-free processes. TI may reference these types of products as "Pb-Free".
RoHS Exempt: TI defines "RoHS Exempt" to mean products that contain lead but are compliant with EU RoHS pursuant to a specific EU RoHS exemption.
Green: TI defines "Green" to mean the content of Chlorine (Cl) and Bromine (Br) based flame retardants meet JS709B low halogen requirements of <=1000ppm threshold. Antimony trioxide based flame retardants must also meet the <=1000ppm threshold requirement.

(3) MSL, Peak Temp. - The Moisture Sensitivity Level rating according to the JEDEC industry standard classifications, and peak solder temperature.

(4) There may be additional marking, which relates to the logo, the lot trace code information, or the environmental category on the device.

(5) Multiple Device Markings will be inside parentheses. Only one Device Marking contained in parentheses and separated by a "~" will appear on a device. If a line is indented then it is a continuation of the previous line and the two combined represent the entire Device Marking for that device.

(6) Lead/Ball Finish - Orderable Devices may have multiple material finish options. Finish options are separated by a vertical ruled line. Lead/Ball Finish values may wrap to two lines if the finish value exceeds the maximum column width.

Important Information and Disclaimer: The information provided on this page represents TI's knowledge and belief as of the date that it is provided. TI bases its knowledge and belief on information provided by third parties, and makes no representation or warranty as to the accuracy of such information. Efforts are underway to better integrate information from third parties. TI has taken and continues to take reasonable steps to provide representative and accurate information but may not have conducted destructive testing or chemical analysis on incoming materials and chemicals. TI and TI suppliers consider certain information to be proprietary, and thus CAS numbers and other limited information may not be available for release.

In no event shall TI's liability arising out of such information exceed the total purchase price of the TI part(s) at issue in this document sold by TI to Customer on an annual basis.

© COPYRIGHT 2012 TEXAS INSTRUMENTS
UN-PUBLISHED, ALL RIGHTS RESERVED.

REVISIONS			
REV	DESCRIPTION	DATE	BY
A	ECO 2127544: INITIAL RELEASE	9/14/2012	BMH
B	ECO 2129552: ENLARGE APERTURE ON RIGHT SIDE; MOVE ACTIVE ARRAY Y-LOCATION DIM, SH. 3	12/10/2012	BMH
C	ECO 2131252: ENLARGE APERTURE ALONG BOTTOM EDGE	2/20/2013	BMH
D	ECO 2135244: CORRECT WINDOW THK TOL, ZONE B6	8/5/2013	BMH
E	ECO 2138016: INCREASE WINDOW THK NOMINAL	11/21/2013	BMH

NOTES UNLESS OTHERWISE SPECIFIED:

1. DIE PARALLELISM TOLERANCE APPLIES TO DMD ACTIVE ARRAY ONLY.
2. ROTATION ANGLE OF DMD ACTIVE ARRAY IS A REFINEMENT OF THE LOCATION TOLERANCE AND HAS A MAXIMUM ALLOWED VALUE OF 0.6 DEGREES.
3. BOUNDARY MIRRORS SURROUNDING THE DMD ACTIVE ARRAY.
4. DMD MARKING TO APPEAR IN CONNECTOR RECESS.
5. NOTCH DIMENSIONS ARE DEFINED BY UPPERMOST LAYERS OF CERAMIC, AS SHOWN IN SECTION A-A.
6. ENCAPSULANT TO BE CONTAINED WITHIN DIMENSIONS SHOWN IN VIEW C (SHEET 2). NO ENCAPSULANT IS ALLOWED ON TOP OF THE WINDOW.
7. ENCAPSULANT NOT TO EXCEED THE HEIGHT OF THE WINDOW.
8. DATUM B IS DEFINED BY A DIA. 2.5 PIN, WITH A FLAT ON THE SIDE FACING TOWARD THE CENTER OF THE ACTIVE ARRAY, AS SHOWN IN VIEW B (SHEET 2).
9. WHILE ONLY THE THREE DATUM A TARGET AREAS A1, A2, AND A3 ARE USED FOR MEASUREMENT, ALL 4 CORNERS SHOULD BE CONTACTED, INCLUDING E1, TO SUPPORT MECHANICAL LOADS.

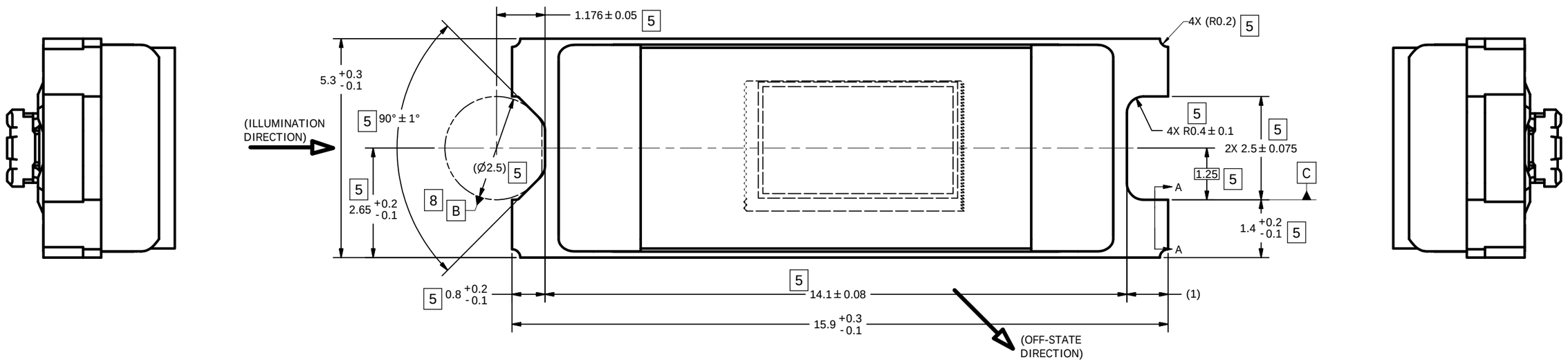

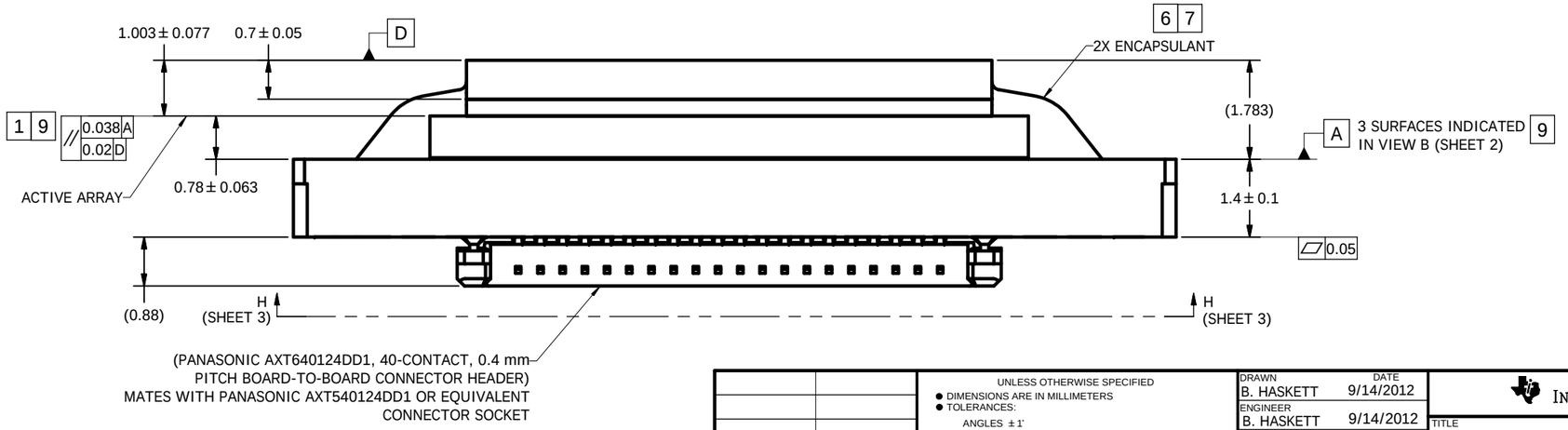

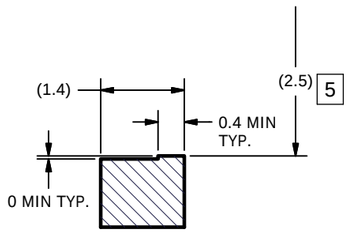

SECTION A-A
NOTCH OFFSETS

0314DA	
NEXT ASSY	USED ON
APPLICATION	

THIRD ANGLE PROJECTION

UNLESS OTHERWISE SPECIFIED
- DIMENSIONS ARE IN MILLIMETERS
- TOLERANCES:
  - ANGLES ± 1'
  - 2 PLACE DECIMALS ± 0.25
  - 1 PLACE DECIMALS ± 0.50
- ~~DIMENSIONAL UNITS APPLY BEFORE PROCESSES~~
- INTERPRET DIMENSIONS IN ACCORDANCE WITH ASME Y14.5M-1994
- ~~REMOVE ALL BURRS AND SHARP EDGES~~
- PARENTHETICAL INFORMATION FOR REFERENCE ONLY

		DATE
DRAWN	B. HASKETT	9/14/2012
ENGINEER	B. HASKETT	9/14/2012
QA/CE	P. KONRAD	9/26/2012
CM	F. ARMSTRONG	9/26/2012
	M. DORAK	9/18/2012
APPROVED	M. SOUCEK	9/18/2012

TEXAS INSTRUMENTS
Dallas Texas

TITLE: ICD, MECHANICAL, DMD, .2 WVGA SERIES 244

SIZE	DWG NO	REV
D	2512515	E

SCALE 20:1 SHEET 1 OF 3

DWG NO. 2512515 SH 1

INV11-2006a

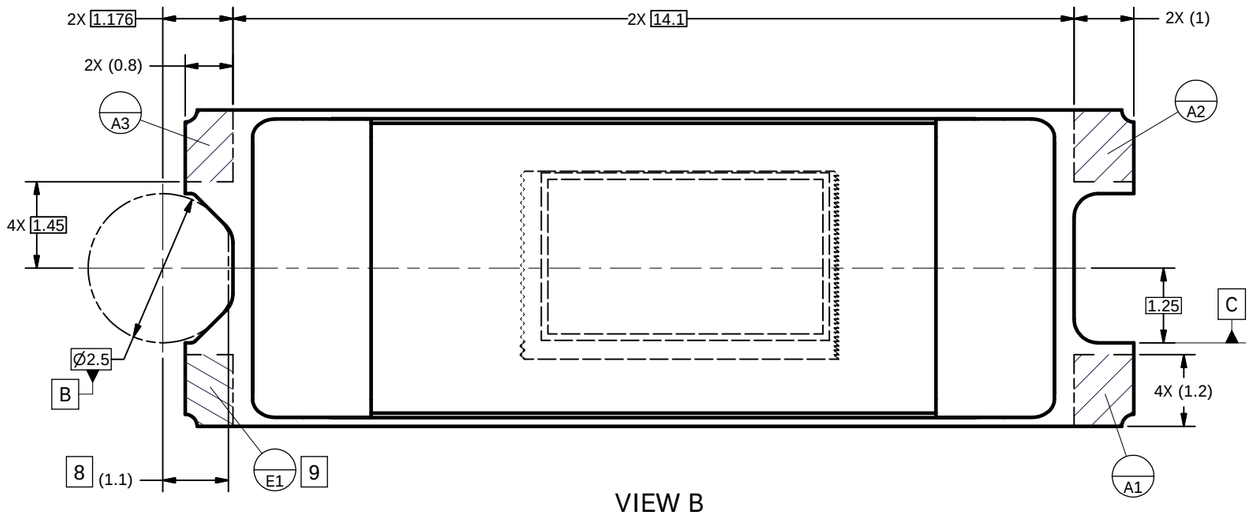

VIEW B
DATUMS A, B, C, AND E
(FROM SHEET 1)

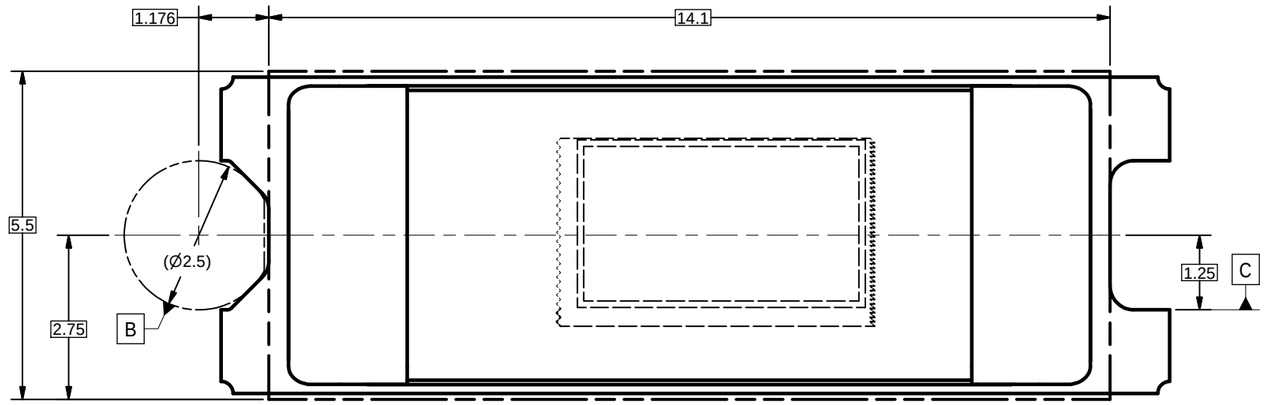

VIEW C 6
ENCAPSULANT MAXIMUM X/Y DIMENSIONS
(FROM SHEET 1)

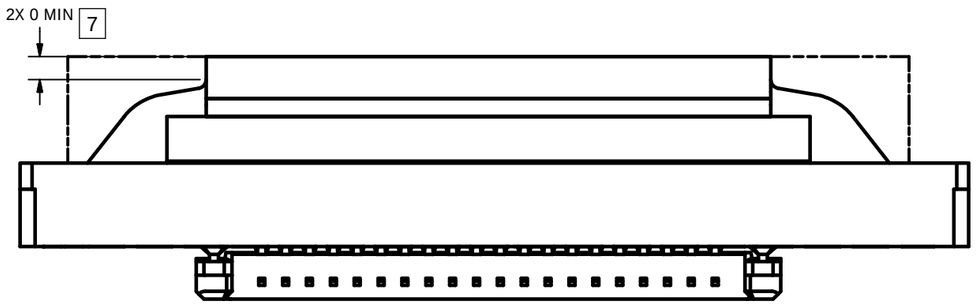

VIEW D
ENCAPSULANT MAXIMUM HEIGHT

TEXAS INSTRUMENTS Dallas Texas	DRAWN B. HASKETT	DATE 9/14/2012	SIZE D	DWG NO 2512515	REV E
			SCALE	SHEET 2 OF 3	

INV11-2006a

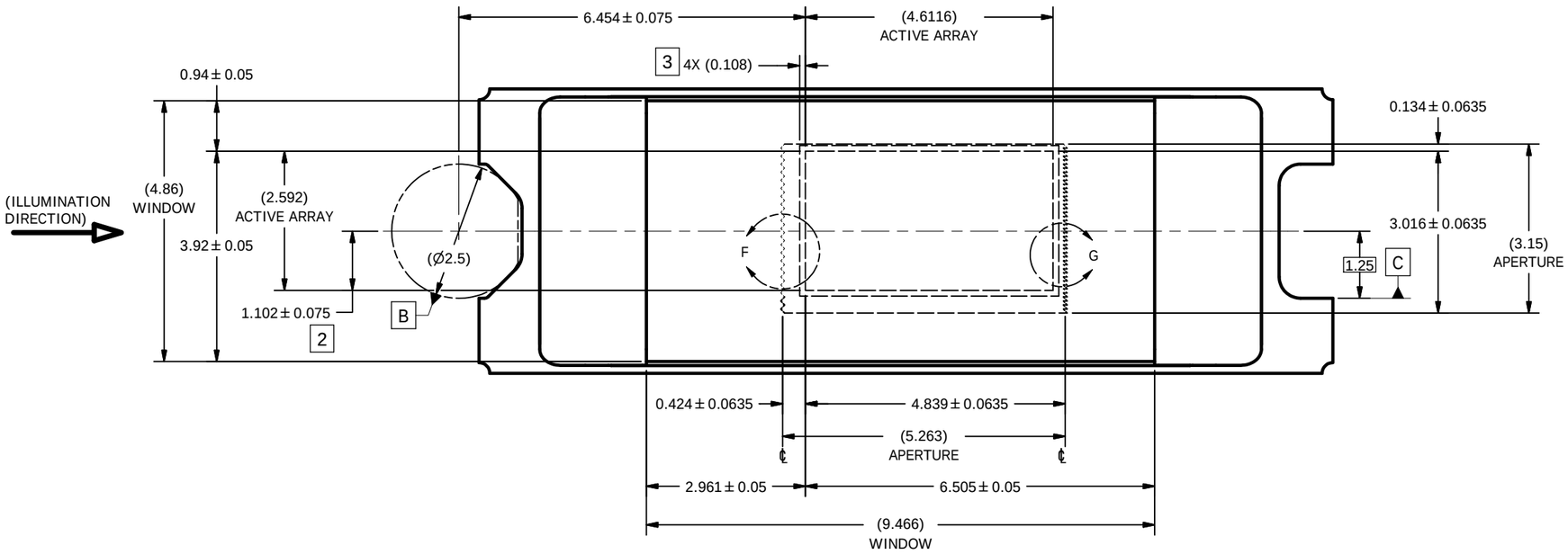

VIEW E
WINDOW AND ACTIVE ARRAY
(FROM SHEET 1)

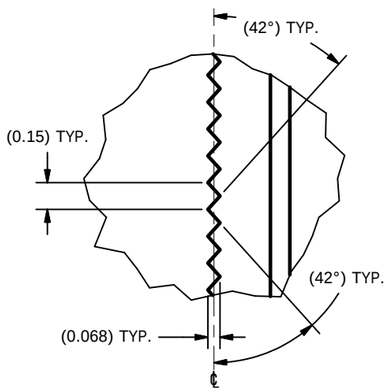

DETAIL F
APERTURE LEFT EDGE
SCALE 60 : 1

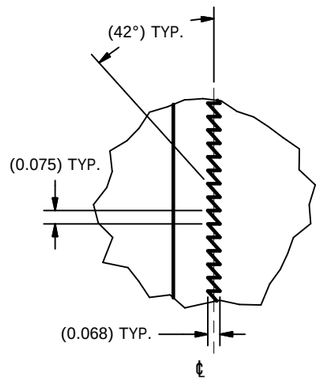

DETAIL G
APERTURE RIGHT EDGE
(POND OF MIRRORS OMITTED FOR CLARITY)
SCALE 60 : 1

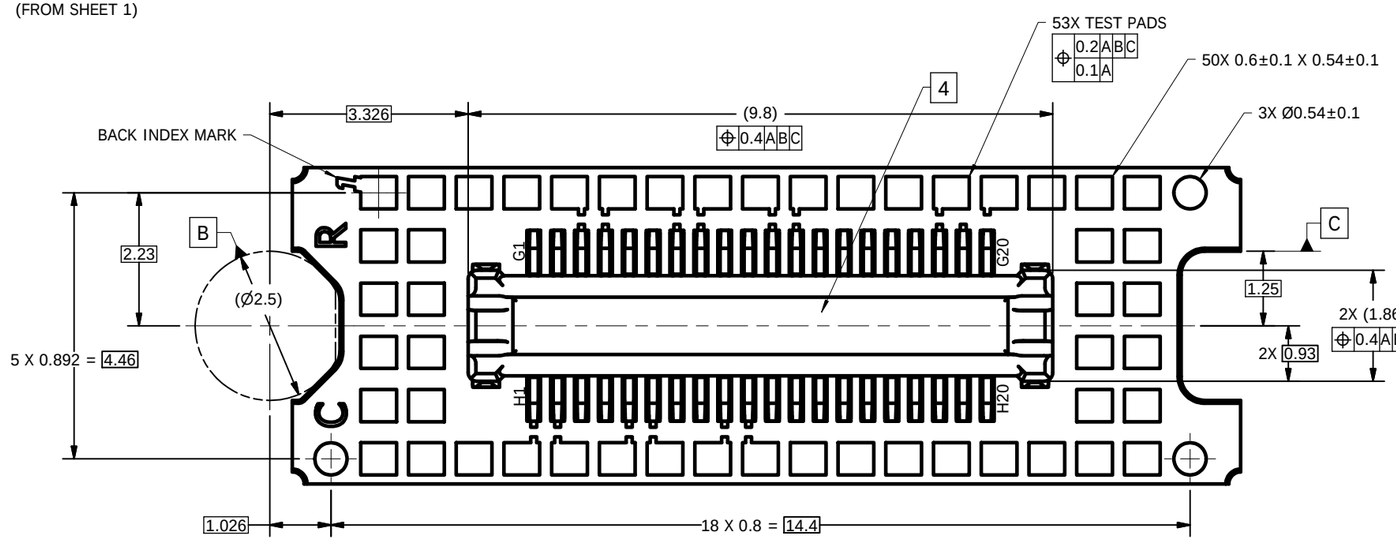

VIEW H-H
TEST PADS AND CONNECTOR
(FROM SHEET 1)

Texas Instruments Dallas Texas	DRAWN B. HASKETT	DATE 9/14/2012	SIZE D		DWG NO 2512515	REV E
			SCALE		SHEET 3 OF 3	

INV11-2006a

IMPORTANT NOTICE

Texas Instruments Incorporated (TI) reserves the right to make corrections, enhancements, improvements and other changes to its semiconductor products and services per JESD46, latest issue, and to discontinue any product or service per JESD48, latest issue. Buyers should obtain the latest relevant information before placing orders and should verify that such information is current and complete.

TI's published terms of sale for semiconductor products (http://www.ti.com/sc/docs/stdterms.htm) apply to the sale of packaged integrated circuit products that TI has qualified and released to market. Additional terms may apply to the use or sale of other types of TI products and services.

Reproduction of significant portions of TI information in TI data sheets is permissible only if reproduction is without alteration and is accompanied by all associated warranties, conditions, limitations, and notices. TI is not responsible or liable for such reproduced documentation. Information of third parties may be subject to additional restrictions. Resale of TI products or services with statements different from or beyond the parameters stated by TI for that product or service voids all express and any implied warranties for the associated TI product or service and is an unfair and deceptive business practice. TI is not responsible or liable for any such statements.

Buyers and others who are developing systems that incorporate TI products (collectively, "Designers") understand and agree that Designers remain responsible for using their independent analysis, evaluation and judgment in designing their applications and that Designers have full and exclusive responsibility to assure the safety of Designers' applications and compliance of their applications (and of all TI products used in or for Designers' applications) with all applicable regulations, laws and other applicable requirements. Designer represents that, with respect to their applications, Designer has all the necessary expertise to create and implement safeguards that (1) anticipate dangerous consequences of failures, (2) monitor failures and their consequences, and (3) lessen the likelihood of failures that might cause harm and take appropriate actions. Designer agrees that prior to using or distributing any applications that include TI products, Designer will thoroughly test such applications and the functionality of such TI products as used in such applications.

TI's provision of technical, application or other design advice, quality characterization, reliability data or other services or information, including, but not limited to, reference designs and materials relating to evaluation modules, (collectively, "TI Resources") are intended to assist designers who are developing applications that incorporate TI products; by downloading, accessing or using TI Resources in any way, Designer (individually or, if Designer is acting on behalf of a company, Designer's company) agrees to use any particular TI Resource solely for this purpose and subject to the terms of this Notice.

TI's provision of TI Resources does not expand or otherwise alter TI's applicable published warranties or warranty disclaimers for TI products, and no additional obligations or liabilities arise from TI providing such TI Resources. TI reserves the right to make corrections, enhancements, improvements and other changes to its TI Resources. TI has not conducted any testing other than that specifically described in the published documentation for a particular TI Resource.

Designer is authorized to use, copy and modify any individual TI Resource only in connection with the development of applications that include the TI product(s) identified in such TI Resource. NO OTHER LICENSE, EXPRESS OR IMPLIED, BY ESTOPPEL OR OTHERWISE TO ANY OTHER TI INTELLECTUAL PROPERTY RIGHT, AND NO LICENSE TO ANY TECHNOLOGY OR INTELLECTUAL PROPERTY RIGHT OF TI OR ANY THIRD PARTY IS GRANTED HEREIN, including but not limited to any patent right, copyright, mask work right, or other intellectual property right relating to any combination, machine, or process in which TI products or services are used. Information regarding or referencing third-party products or services does not constitute a license to use such products or services, or a warranty or endorsement thereof. Use of TI Resources may require a license from a third party under the patents or other intellectual property of the third party, or a license from TI under the patents or other intellectual property of TI.

TI RESOURCES ARE PROVIDED "AS IS" AND WITH ALL FAULTS. TI DISCLAIMS ALL OTHER WARRANTIES OR REPRESENTATIONS, EXPRESS OR IMPLIED, REGARDING RESOURCES OR USE THEREOF, INCLUDING BUT NOT LIMITED TO ACCURACY OR COMPLETENESS, TITLE, ANY EPIDEMIC FAILURE WARRANTY AND ANY IMPLIED WARRANTIES OF MERCHANTABILITY, FITNESS FOR A PARTICULAR PURPOSE, AND NON-INFRINGEMENT OF ANY THIRD PARTY INTELLECTUAL PROPERTY RIGHTS. TI SHALL NOT BE LIABLE FOR AND SHALL NOT DEFEND OR INDEMNIFY DESIGNER AGAINST ANY CLAIM, INCLUDING BUT NOT LIMITED TO ANY INFRINGEMENT CLAIM THAT RELATES TO OR IS BASED ON ANY COMBINATION OF PRODUCTS EVEN IF DESCRIBED IN TI RESOURCES OR OTHERWISE. IN NO EVENT SHALL TI BE LIABLE FOR ANY ACTUAL, DIRECT, SPECIAL, COLLATERAL, INDIRECT, PUNITIVE, INCIDENTAL, CONSEQUENTIAL OR EXEMPLARY DAMAGES IN CONNECTION WITH OR ARISING OUT OF TI RESOURCES OR USE THEREOF, AND REGARDLESS OF WHETHER TI HAS BEEN ADVISED OF THE POSSIBILITY OF SUCH DAMAGES.

Unless TI has explicitly designated an individual product as meeting the requirements of a particular industry standard (e.g., ISO/TS 16949 and ISO 26262), TI is not responsible for any failure to meet such industry standard requirements.

Where TI specifically promotes products as facilitating functional safety or as compliant with industry functional safety standards, such products are intended to help enable customers to design and create their own applications that meet applicable functional safety standards and requirements. Using products in an application does not by itself establish any safety features in the application. Designers must ensure compliance with safety-related requirements and standards applicable to their applications. Designer may not use any TI products in life-critical medical equipment unless authorized officers of the parties have executed a special contract specifically governing such use. Life-critical medical equipment is medical equipment where failure of such equipment would cause serious bodily injury or death (e.g., life support, pacemakers, defibrillators, heart pumps, neurostimulators, and implantables). Such equipment includes, without limitation, all medical devices identified by the U.S. Food and Drug Administration as Class III devices and equivalent classifications outside the U.S.

TI may expressly designate certain products as completing a particular qualification (e.g., Q100, Military Grade, or Enhanced Product). Designers agree that it has the necessary expertise to select the product with the appropriate qualification designation for their applications and that proper product selection is at Designers' own risk. Designers are solely responsible for compliance with all legal and regulatory requirements in connection with such selection.

Designer will fully indemnify TI and its representatives against any damages, costs, losses, and/or liabilities arising out of Designer's non-compliance with the terms and provisions of this Notice.

Mailing Address: Texas Instruments, Post Office Box 655303, Dallas, Texas 75265
Copyright © 2018, Texas Instruments Incorporated