DLPC3433 and DLPC3438 Display Controller

1 Features

- Display Controller for DLP3010 (.3 720p) TRP DMD
  - Supports Input Image Sizes up to 720p
  - Low-Power DMD Interface With Interface Training
- 24-Bit, Input Pixel Interface Support:
  - Parallel or BT656, Interface Protocols
  - Pixel Clock up to 150 MHz
  - Multiple Input Pixel Data Format Options
- MIPI DSI Interface Type 3 (Only Supported With DLPC3433)
  - 1-4 Lanes, up to 470 Mbps Lane Speed
- Pixel Data Processing:
  - IntelliBright™ Suite of Image Processing Algorithms
    - Content Adaptive Illumination Control
    - Local Area Brightness Boost
  - Image Resizing (Scaling)
  - 1D Keystone Correction
  - Color Coordinate Adjustment
  - Programmable Degamma
  - Active Power Management Processing
  - Color Space Conversion
  - 4:2:2 to 4:4:4 Chroma Interpolation
  - Field Scaled De-interlacing
- Two Package Options:
  - 176-Pin, 7- × 7-mm, 0.4-mm Pitch, NFBGA
  - 201-Pin, 13- × 13-mm, 0.8-mm Pitch, NFBGA
- External Flash Support
- Auto DMD Parking at Power Down
- Embedded Frame Memory (eDRAM)
- System Features:
  - I^2C Control of Device Configuration
  - Programmable Splash Screens
  - Programmable LED Current Control
  - Display Image Rotation
  - One Frame Latency
  - Compatible With DLPA2000, DLPA2005, and DLPA3000 PMIC's

2 Applications

- Battery Powered Mobile Accessory HD Projector
- Battery Powered Smart HD Accessory
- Embedded Projection (Notebooks, Laptops, Tablets, Hot Spots, and So Forth)
- Digital Signage
- Wearable Display (Near Eye or Head Mounted)
- Interactive Display
- Low-Latency Gaming Display

3 Description

The DLPC343x digital controller, part of the DLP3010 (.3 720p) chipset, supports reliable operation of the DLP3010 digital micromirror device (DMD). The DLPC343x controller provides a convenient, multi-functional interface between system electronics and the DMD, enabling small form factor, low power, and high resolution HD displays.

Device Information (1)(2)

PART NUMBER	PACKAGE	BODY SIZE (NOM)
DLPC3433	NFBGA (176)	7.00 × 7.00 mm^2
DLPC3438	NFBGA (201)	13.00 × 13.00 mm^2

(1) For all available packages, see the orderable addendum at the end of the data sheet.

(2) DSI is available for the DLPC3433 only. DSI is not available for the DLPC3438.

Typical Standalone System

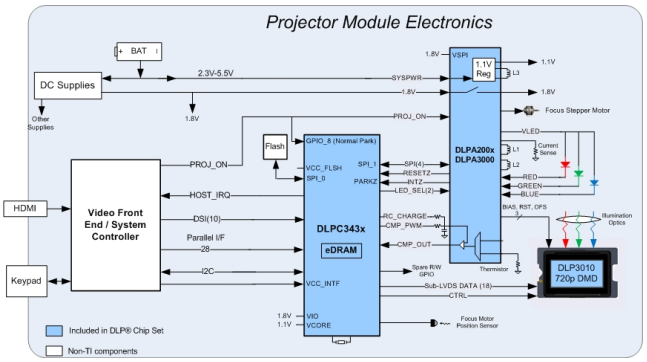

An IMPORTANT NOTICE at the end of this data sheet addresses availability, warranty, changes, use in safety-critical applications, intellectual property matters and other important disclaimers. PRODUCTION DATA.

Table of Contents

1 Features ... 1
2 Applications ... 1
3 Description ... 1
4 Revision History ... 2
5 Pin Configuration and Functions ... 4
6 Specifications ... 14
6.1 Absolute Maximum Ratings ... 14
6.2 ESD Ratings ... 14
6.3 Recommended Operating Conditions ... 15
6.4 Thermal Information ... 15
6.5 Electrical Characteristics over Recommended Operating Conditions ... 16
6.6 Electrical Characteristics ... 17
6.7 High-Speed Sub-LVDS Electrical Characteristics ... 20
6.8 Low-Speed SDR Electrical Characteristics ... 21
6.9 System Oscillators Timing Requirements ... 22
6.10 Power-Up and Reset Timing Requirements ... 22
6.11 Parallel Interface Frame Timing Requirements ... 23
6.12 Parallel Interface General Timing Requirements ... 24
6.13 BT656 Interface General Timing Requirements ... 25
6.14 DSI Host Timing Requirements ... 25
6.15 Flash Interface Timing Requirements ... 26
7 Parameter Measurement Information ... 27
7.1 HOST_IRQ Usage Model ... 27
7.2 Input Source ... 28
8 Detailed Description ... 31
8.1 Overview ... 31
8.2 Functional Block Diagram ... 31
8.3 Feature Description ... 31
8.4 Device Functional Modes ... 42
9 Application and Implementation ... 43
9.1 Application Information ... 43
9.2 Typical Application ... 43
10 Power Supply Recommendations ... 46
10.1 System Power-Up and Power-Down Sequence ... 46
10.2 DLPC343x Power-Up Initialization Sequence ... 48
10.3 DMD Fast PARK Control (PARKZ) ... 49
10.4 Hot Plug Usage ... 49
10.5 Maximum Signal Transition Time ... 49
11 Layout ... 50
11.1 Layout Guidelines ... 50
11.2 Layout Example ... 55
11.3 Thermal Considerations ... 55
12 Device and Documentation Support ... 56
12.1 Device Support ... 56
12.2 Related Links ... 58
12.3 Community Resources ... 58
12.4 Trademarks ... 58
12.5 Electrostatic Discharge Caution ... 58
12.6 Glossary ... 58
13 Mechanical, Packaging, and Orderable Information ... 58
13.1 Package Option Addendum ... 59

4 Revision History

NOTE: Page numbers for previous revisions may differ from page numbers in the current version.

Changes from Revision B (January 2016) to Revision C **Page**

- Added DSI pin functions in Pin Functions - DSI Input Data and Clock ... 8
- Added *DSI Host Timing Requirements* ... 25
- Updated *Input Source* ... 28
- Added *DSI Interface - Supported Data Transfer Formats* ... 30
- Added *Display Serial Interface DSI* ... 32
- Added *3-D Glasses Operation* ... 39
- Added *PCB Layout Guidelines for DSI Interface* ... 52
- Added MSL Peak Temp to *Packaging Information* ... 59

Changes from Revision A (September 2014) to Revision B **Page**

- Moved the storage temperature to the *Absolute Maximum Ratings* table ... 14
- Updated the *Handling Ratings* table to an *ESD Ratings* table ... 14
- Updated the device markings ... 56
- Added *Community Resources* ... 58

Copyright © 2014–2016, Texas Instruments Incorporated

Changes from Original (February 2014) to Revision A **Page**

- Changed device status from Product Preview to Production Data and released full version of the document. 1

Copyright © 2014–2016, Texas Instruments Incorporated

5 Pin Configuration and Functions

ZVB Package
176-Pin NFBGA
Bottom View

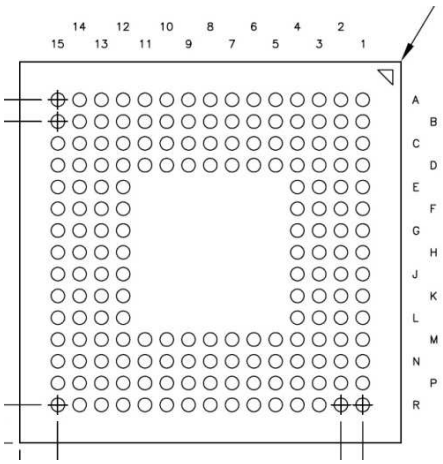

	1	2	3	4	5	6	7	8	9	10	11	12	13	14	15
A	DMD_LS_CLK	DMD_LS_WDATA	DMD_HS_WDATAH_P	DMD_HS_WDATAG_P	DMD_HS_WDATAF_P	DMD_HS_WDATAE_P	DMD_HS_CLKP	DMD_HS_WDATAD_P	DMD_HS_WDATAC_P	DMD_HS_WDATAB_P	DMD_HS_WDATAA_P	CMP_OUT	SPI0_CLK	SPI0_CS20	CMP_PWM
B	DMD_DEN_ARSTZ	DMD_LS_RDATA	DMD_HS_WDATAH_N	DMD_HS_WDATAG_N	DMD_HS_WDATAF_N	DMD_HS_WDATAE_N	DMD_HS_CLKN	DMD_HS_WDATAD_N	DMD_HS_WDATAC_N	DMD_HS_WDATAB_N	DMD_HS_WDATAA_N	SPI0_DIN	SPI0_DOUT	LED_SEL_1	LED_SEL_0
C	DD3P	DD3N	VDDLP12	VSS	VDD	VSS	VCC	VSS	VCC	HWTEST_EN	RESETZ	SPI0_CSZ1	PARKZ	GPIO_00	GPIO_01
D	DD2P	DD2N	VDD	VCC	VDD	VSS	VDD	VSS	VDD	VSS	VCC_FLSH	VDD	VDD	GPIO_02	GPIO_03
E	DCLKP	DCLKN	VDD	VSS								VCC	VSS	GPIO_04	GPIO_05
F	DD1P	DD1N	RREF	VSS								VCC	VDD	GPIO_06	GPIO_07
G	DD0P	DD0N	VSS_PLLM	VSS								VSS	VSS	GPIO_08	GPIO_09
H	PLL_REFCLK_I	VDD_PLLM	VSS_PLLD	VSS								VSS	VDD	GPIO_10	GPIO_11
J	PLL_REFCLK_O	VDD_PLLD	VSS	VDD								VDD	VSS	GPIO_12	GPIO_13
K	PDATA_1	PDATA_0	VDD	VSS								VSS	VCC	GPIO_14	GPIO_15
L	PDATA_3	PDATA_2	VSS	VDD								VDD	VDD	GPIO_16	GPIO_17
M	PDATA_5	PDATA_4	VCC_INTF	VSS	VSS	VDD	VCC_INTF	VSS	VDD	VDD	VCC	VSS	JTAGTMS1	GPIO_18	GPIO_19
N	PDATA_7	PDATA_6	VCC_INTF	PDM_CVSTE	HSYNC_CS	3DR	VCC_INTF	HOST_IRQ	IIC0_SDA	IIC0_SCL	JTAGTMS2	JTAGTDO2	JTAGTDO1	TSTPT_6	TSTPT_7
P	VSYNC_WE	DATEN_CMD	PCLK	PDATA_11	PDATA_13	PDATA_15	PDATA_17	PDATA_19	PDATA_21	PDATA_23	JTAGTRSTZ	JTAGTCK	JTAGTDI	TSTPT_4	TSTPT_5
R	PDATA_8	PDATA_9	PDATA_10	PDATA_12	PDATA_14	PDATA_16	PDATA_18	PDATA_20	PDATA_22	IIC1_SDA	IIC1_SCL	TSTPT_0	TSTPT_1	TSTPT_2	TSTPT_3

Figure 1. DLPC3433 7- × 7-mm Package – VF Ball Grid Array

ZEZ Package
201-Pin NFBGA
Bottom View

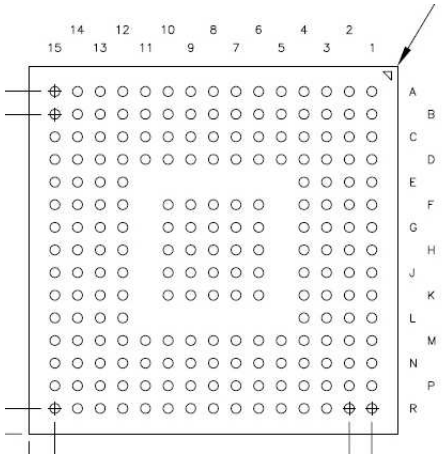

	1	2	3	4	5	6	7	8	9	10	11	12	13	14	15
A	DMD_LS_CLK	DMD_LS_WDATA	DMD_HS_WDATAH_P	DMD_HS_WDATAG_P	DMD_HS_WDATAF_P	DMD_HS_WDATAE_P	DMD_HS_CLKP	DMD_HS_WDATAD_P	DMD_HS_WDATAC_P	DMD_HS_WDATAB_P	DMD_HS_WDATAA_P	CMP_OUT	SPI0_CLK	SPI0_CS20	CMP_PWM
B	DMD_DEN_ARSTZ	DMD_LS_RDATA	DMD_HS_WDATAH_N	DMD_HS_WDATAG_N	DMD_HS_WDATAF_N	DMD_HS_WDATAE_N	DMD_HS_CLKN	DMD_HS_WDATAD_N	DMD_HS_WDATAC_N	DMD_HS_WDATAB_N	DMD_HS_WDATAA_N	SPI0_DIN	SPI0_DOUT	LED_SEL_1	LED_SEL_0
C	DD3P	DD3N	VDDLP12	VSS	VDD	VSS	VCC	VSS	VCC	HWTEST_EN	RESETZ	SPI0_CSZ1	PARKZ	GPIO_00	GPIO_01
D	DD2P	DD2N	VDD	VCC	VDD	VSS	VDD	VSS	VDD	VSS	VCC_FLSH	VDD	VDD	GPIO_02	GPIO_03
E	DCLKP	DCLKN	VDD	VSS								VCC	VSS	GPIO_04	GPIO_05
F	DD1P	DD1N	RREF	VSS		VSS	VSS	VSS	VSS	VSS		VCC	VDD	GPIO_06	GPIO_07
G	DD0P	DD0N	VSS_PLLM	VSS		VSS	VSS	VSS	VSS	VSS		VSS	VSS	GPIO_08	GPIO_09
H	PLL_REFCLK_I	VDD_PLLM	VSS_PLLD	VSS		VSS	VSS	VSS	VSS	VSS		VSS	VDD	GPIO_10	GPIO_11
J	PLL_REFCLK_O	VDD_PLLD	VSS	VDD		VSS	VSS	VSS	VSS	VSS		VDD	VSS	GPIO_12	GPIO_13
K	PDATA_1	PDATA_0	VDD	VSS		VSS	VSS	VSS	VSS	VSS		VSS	VCC	GPIO_14	GPIO_15
L	PDATA_3	PDATA_2	VSS	VDD								VDD	VDD	GPIO_16	GPIO_17
M	PDATA_5	PDATA_4	VCC_INTF	VSS	VSS	VDD	VCC_INTF	VSS	VDD	VDD	VCC	VSS	JTAGTMS1	GPIO_18	GPIO_19
N	PDATA_7	PDATA_6	VCC_INTF	PDM_CVSTE	HSYNC_CS	3DR	VCC_INTF	HOST_IRQ	IIC0_SDA	IIC0_SCL	JTAGTMS2	JTAGTDO2	JTAGTDO1	TSTPT_6	TSTPT_7
P	VSYNC_WE	DATEN_CMD	PCLK	PDATA_11	PDATA_13	PDATA_15	PDATA_17	PDATA_19	PDATA_21	PDATA_23	JTAGTRSTZ	JTAGTCK	JTAGTDI	TSTPT_4	TSTPT_5
R	PDATA_8	PDATA_9	PDATA_10	PDATA_12	PDATA_14	PDATA_16	PDATA_18	PDATA_20	PDATA_22	IIC1_SDA	IIC1_SCL	TSTPT_0	TSTPT_1	TSTPT_2	TSTPT_3

Figure 2. DLPC3438 7- × 7-mm Package – VF Ball Grid Array

Pin Functions – Board Level Test, Debug, and Initialization

PIN		I/O	DESCRIPTION
NAME	NUMBER		
HWTEST_EN	C10	I_6	Manufacturing test enable signal. This signal should be connected directly to ground on the PCB for normal operation.

Copyright © 2014–2016, Texas Instruments Incorporated

Pin Functions – Board Level Test, Debug, and Initialization (continued)

PIN		I/O	DESCRIPTION
NAME	NUMBER		
PARKZ	C13	I_6	DMD fast PARK control (active low Input) (hysteresis buffer). PARKZ must be set high to enable normal operation. PARKZ should be set high prior to releasing RESETZ (that is, prior to the low-to-high transition on the RESETZ input). PARKZ should be set low for a minimum of 32 µs before any power is removed from the DLPC343x such that the fast DMD PARK operation can be completed. Note for PARKZ, fast PARK control should only be used when loss of power is eminent and beyond the control of the host processor (for example, when the external power source has been disconnected or the battery has dropped below a minimum level). The longest lifetime of the DMD may not be achieved with the fast PARK operation. The longest lifetime is achieved with a normal PARK operation. Because of this, PARKZ is typically used in conjunction with a normal PARK request control input through GPIO_08. The difference being that when the host sets PROJ_ON low, which connects to both GPIO_08 and the DLPA200x or DLPA3000 PMIC chip, the DLPC343x takes much longer than 32 µs to park the mirrors. The DLPA200x or DLPA3000 holds on all power supplies, and keep RESETZ high, until the longer mirror parking has completed. This longer mirror parking time, of up to 500 µs, ensures the longest DMD lifetime and reliability. The DLPA200x or DLPA3000 monitors power to the DLPC343x and detects an eminent power loss condition and drives the PARKZ signal accordingly.
Reserved	P12	I_6	TI internal use. Should be left unconnected.
Reserved	P13	I_6	TI internal use. Should be left unconnected.
Reserved	N13 (1)	O_1	TI internal use. Should be left unconnected.
Reserved	N12 (1)	O_1	TI internal use. Should be left unconnected.
Reserved	M13	I_6	TI internal use. Should be left unconnected.
Reserved	N11	I_6	TI internal use. Should be left unconnected.
Reserved	P11	I_6	TI internal use This pin must be tied to ground, through an external 8-kΩ, or less, resistor for normal operation. Failure to tie this pin low during normal operation will cause startup and initialization problems.
RESETZ	C11	I_6	DLPC343x power-on reset (active low input) (hysteresis buffer). Self-configuration starts when a low-to-high transition is detected on RESETZ. All ASIC power and clocks must be stable before this reset is de-asserted. Note that the following signals will be tri-stated while RESETZ is asserted: SPI0_CLK, SPI0_DOUT, SPI0_CSZ0, SPI0_CSZ1, and GPIO(19:00) External pullups or downs (as appropriate) should be added to all tri-stated output signals listed (including bidirectional signals to be configured as outputs) to avoid floating ASIC outputs during reset if connected to devices on the PCB that can malfunction. For SPI, at a minimum, any chip selects connected to the devices should have a pullup. Unused bidirectional signals can be functionally configured as outputs to avoid floating ASIC inputs after RESETZ is set high. The following signals are forced to a logic low state while RESETZ is asserted and corresponding I/O power is applied: LED_SEL_0, LED_SEL_1 and DMD_DEN_ARSTZ No signals will be in their active state while RESETZ is asserted. Note that no I^2C activity is permitted for a minimum of 500 ms after RESETZ (and PARKZ) are set high.
TSTPT_0	R12	B_1	Test pin 0 (includes weak internal pulldown) – tri-stated while RESETZ is asserted low. Sampled as an input test mode selection control approximately 1.5 µs after de-assertion of RESETZ, and then driven as an output. Normal use: reserved for test output. Should be left open for normal use. Note: An external pullup should not be applied to this pin to avoid putting the DLPC343x in a test mode. Without external pullup (2) Feeds TMSEL(0) With external pullup (3) Feeds TMSEL(0)

(1) If operation does not call for an external pullup and there is no external logic that might overcome the weak internal pulldown resistor, then this I/O can be left open or unconnected for normal operation. If operation does not call for an external pullup, but there is external logic that might overcome the weak internal pulldown resistor, then an external pulldown resistor is recommended to ensure a logic low.
(2) External pullup resistor must be 8 kΩ, or less, for pins with internal pullup or down resistors.
(3) If operation does not call for an external pullup and there is no external logic that might overcome the weak internal pulldown resistor, then the TSTPT I/O can be left open/ unconnected for normal operation. If operation does not call for an external pullup, but there is external logic that might overcome the weak internal pulldown resistor, then an external pulldown resistor is recommended to ensure a logic low.

Copyright © 2014–2016, Texas Instruments Incorporated

Pin Functions – Board Level Test, Debug, and Initialization (continued)

PIN		I/O	DESCRIPTION
NAME	NUMBER		
TSTPT_1	R13	B_1	Test pin 1 (includes weak internal pulldown) – tri-stated while RESETZ is asserted low. Sampled as an input test mode selection control approximately 1.5 µs after de-assertion of RESETZ and then driven as an output. Normal use: reserved for test output. Should be left open for normal use. Note: An external pullup should not be applied to this pin to avoid putting the DLPC343x in a test mode. Without external pullup(2) Feeds TMSEL(1) With external pullup(3) Feeds TMSEL(1)
TSTPT_2	R14	B_1	Test pin 2 (Includes weak internal pulldown) – tri-stated while RESETZ is asserted low. Sampled as an input test mode selection control approximately 1.5 µs after de-assertion of RESETZ and then driven as an output. Normal use: reserved for test output. Should be left open for normal use. Note: An external pullup should not be applied to this pin to avoid putting the DLPC343x in a test mode. Without external pullup(2) Feeds TMSEL(2) With external pullup(3) Feeds TMSEL(2)
TSTPT_3	R15	B_1	Test pin 3 (Includes weak internal pulldown) – tri-stated while RESETZ is asserted low. Sampled as an input test mode selection control approximately 1.5 µs after de-assertion of RESETZ and then driven as an output. Normal use: reserved for for test output. Should be left open for normal use.
TSTPT_4	P14	B_1	Test pin 4 (Includes weak internal pulldown) – tri-stated while RESETZ is asserted low. Sampled as an input test mode selection control approximately 1.5 µs after de-assertion of RESETZ and then driven as an output. Normal use: reserved for test output. Should be left open for normal use.
TSTPT_5	P15	B_1	Test pin 5 (Includes weak internal pulldown) – tri-stated while RESETZ is asserted low. Sampled as an input test mode selection control approximately 1.5 µs after de-assertion of RESETZ and then driven as an output. Normal use: reserved for test output. Should be left open or unconnected for normal use.
TSTPT_6	N14	B_1	Test pin 6 (Includes weak internal pulldown) – tri-stated while RESETZ is asserted low. Sampled as an input test mode selection control approximately 1.5 µs after de-assertion of RESETZ and then driven as an output. Normal use: reserved for test output. should be left open for normal use. Alternative use: none. External logic shall not unintentionally pull this pin high to avoid putting the DLPC343x in a test mode.
TSTPT_7	N15	B_1	Test pin 7 (Includes weak internal pulldown) – tri-stated while RESETZ is asserted low. Sampled as an input test mode selection control approximately 1.5 µs after de-assertion of RESETZ and then driven as an output. Normal use: reserved for test output. should be left open for normal use.

Copyright © 2014–2016, Texas Instruments Incorporated

Pin Functions – Parallel Port Input Data and Control[1][2]

PIN		I/O	DESCRIPTION	
NAME	NUMBER		PARALLEL RGB MODE	BT656 INTERFACE MODE
PCLK	P3	I_{11}	Pixel clock[3]	Pixel clock[3]
PDM_CVS_TE	N4	B_5	Parallel data mask[4]	Unused[5]
VSYNC_WE	P1	I_{11}	Vsync[6]	Unused[5]
HSYNC_CS	N5	I_{11}	Hsync[6]	Unused[5]
DATAEN_CMD	P2	I_{11}	Data Valid[6]	Unused[5]
		I_{11}	**(TYPICAL RGB 888)**	
PDATA_0	K2		Blue (bit weight 1)	BT656_Data (0)
PDATA_1	K1		Blue (bit weight 2)	BT656_Data (1)
PDATA_2	L2		Blue (bit weight 4)	BT656_Data (2)
PDATA_3	L1		Blue (bit weight 8)	BT656_Data (3)
PDATA_4	M2		Blue (bit weight 16)	BT656_Data (4)
PDATA_5	M1		Blue (bit weight 32)	BT656_Data (5)
PDATA_6	N2		Blue (bit weight 64)	BT656_Data (6)
PDATA_7	N1		Blue (bit weight 128)	BT656_Data (7)
		I_{11}	**(TYPICAL RGB 888)**	
PDATA_8	R1		Green (bit weight 1)	
PDATA_9	R2		Green (bit weight 2)	
PDATA_10	R3		Green (bit weight 4)	
PDATA_11	P4		Green (bit weight 8)	
PDATA_12	R4		Green (bit weight 16)	Unused
PDATA_13	P5		Green (bit weight 32)	
PDATA_14	R5		Green (bit weight 64)	
PDATA_15	P6		Green (bit weight 128)	
		I_{11}	**(TYPICAL RGB 888)**	
PDATA_16	R6		Red (bit weight 1)	
PDATA_17	P7		Red (bit weight 2)	
PDATA_18	R7		Red (bit weight 4)	
PDATA_19	P8		Red (bit weight 8)	
PDATA_20	R8		Red (bit weight 16)	Unused
PDATA_21	P9		Red (bit weight 32)	
PDATA_22	R9		Red (bit weight 64)	
PDATA_23	P10		Red (bit weight 128)	
3DR	N6		3D reference • For 3D applications: left or right 3D reference (left = 1, right = 0). To be provided by the host when a 3D command is not provided. Must transition in the middle of each frame (no closer than 1 ms to the active edge of VSYNC) • If a 3D application is not used, then this input should be pulled low through an external resistor.	

(1) PDATA(23:0) bus mapping is pixel format and source mode dependent. See later sections for details.
(2) PDM_CVS_TE is optional for parallel interface operation. If unused, inputs should be grounded or pulled down to ground through an external resistor (8 kΩ or less).
(3) Pixel clock capture edge is software programmable.
(4) The parallel data mask signal input is optional for parallel interface operations. If unused, inputs should be grounded or pulled down to ground through an external resistor (8 kΩ or less).
(5) Unused inputs should be grounded or pulled down to ground through an external resistor (8 kΩ or less).
(6) VSYNC, HSYNC, and DATAEN polarity is software programmable.

Copyright © 2014–2016, Texas Instruments Incorporated

Pin Functions - DSI Input Data and Clock

Added PIN		I/O	DESCRIPTION
NAME	NUMBER		MIPI DSI MODE
DCLKN DCLKP	E2 E1	B_{10}	DSI Interface; DSI - LVDS Differential Clock
DD0N DD0P DD1N DD1P DD2N DD2P DD3N DD3P	G2 G1 F2 F1 D2 D1 C2 C1	B_{10}	DSI Interface, DSI Data Lane LVDS Differential Pair inputs 0-> 3 (Support a maximum of 4 input DSI Lanes)(1)
RREF	F3		DSI Reference Resistor A 30k Ohm +/- 1% external trim resistor should be connected from this pin to ground(2)

(1) For DSI, Differential Data Bus(0) is required for DSI operation with the remaining 3 data lanes being optional/ implementation specific as needed. Any unused DSI LVDS pairs should be unconnected and left floating.
(2) RREF is an analog signal that requires a fixed precision resistor connected to this pin when DSI is utilized. If DSI is NOT utilized then this signal should be unconnected and left floating on the board design.

Pin Functions – DMD Reset and Bias Control

PIN		I/O	DESCRIPTION
NAME	NUMBER		
DMD_DEN_ARSTZ	B1	O_2	DMD driver enable (active high)/ DMD reset (active low). Assuming the corresponding I/O power is supplied, this signal will be driven low after the DMD is parked and before power is removed from the DMD. If the 1.8-V power to the DLPC343x is independent of the 1.8-V power to the DMD, then TI recommends a weak, external pulldown resistor to hold the signal low in the event DLPC343x power is inactive while DMD power is applied.
DMD_LS_CLK	A1	O_3	DMD, low speed interface clock
DMD_LS_WDATA	A2	O_3	DMD, low speed serial write data
DMD_LS_RDATA	B2	I_6	DMD, low speed serial read data

Pin Functions – DMD Sub-LVDS Interface

PIN		I/O	DESCRIPTION
NAME	NUMBER		
DMD_HS_CLK_P DMD_HS_CLK_N	A7 B7	O_4	DMD high speed interface
DMD_HS_WDATA_H_P DMD_HS_WDATA_H_N DMD_HS_WDATA_G_P DMD_HS_WDATA_G_N DMD_HS_WDATA_F_P DMD_HS_WDATA_F_N DMD_HS_WDATA_E_P DMD_HS_WDATA_E_N DMD_HS_WDATA_D_P DMD_HS_WDATA_D_N DMD_HS_WDATA_C_P DMD_HS_WDATA_C_N DMD_HS_WDATA_B_P DMD_HS_WDATA_B_N DMD_HS_WDATA_A_P DMD_HS_WDATA_A_N	A3 B3 A4 B4 A5 B5 A6 B6 A8 B8 A9 B9 A10 B10 A11 B11	O_4	DMD high speed interface lanes, write data bits: (The true numbering and application of the DMD_HS_DATA pins are software configuration dependent)

Copyright © 2014–2016, Texas Instruments Incorporated

Pin Functions – Peripheral Interface[1]

PIN		I/O	DESCRIPTION
NAME	NUMBER		
CMP_OUT	A12	I_6	Successive approximation ADC comparator output (DLPC343x Input). Assumes a successive approximation ADC is implemented with a WPC light sensor and/or a thermistor feeding one input of an external comparator and the other side of the comparator is driven from the ASIC's CMP_PWM pin. Should be pulled-down to ground if this function is not used. (hysteresis buffer)
CMP_PWM	A15	O_1	Successive approximation comparator pulse-duration modulation (output). Supplies a PWM signal to drive the successive approximation ADC comparator used in WPC light-to-voltage sensor applications. Should be left unconnected if this function is not used.
HOST_IRQ[2]	N8	O_9	Host interrupt (output) HOST_IRQ indicates when the DLPC343x auto-initialization is in progress and most importantly when it completes. The DLPC343x tri-states this output during reset and assumes that an external pullup is in place to drive this signal to its inactive state.
IIC0_SCL	N10	B_7	I^2C slave (port 0) SCL (bidirectional, open-drain signal with input hysteresis): An external pullup is required. The slave I^2C I/Os are 3.6-V tolerant (high-volt-input tolerant) and are powered by VCC_INTF (which can be 1.8, 2.5, or 3.3 V). External I^2C pullups must be connected to an equal or higher supply voltage, up to a maximum of 3.6 V (a lower pullup supply voltage would not likely satisfy the VIH specification of the slave I^2C input buffers).
Reserved	R11	B_8	TI internal use. TI recommends an external pullup resistor.
IIC0_SDA	N9	B_7	I^2C slave (port 0) SDA. (bidirectional, open-drain signal with input hysteresis): An external pullup is required. The slave I^2C port is the control port of ASIC. The slave I^2C I/Os are 3.6-V tolerant (high-volt-input tolerant) and are powered by VCC_INTF (which can be 1.8, 2.5, or 3.3 V). External I^2C pullups must be connected to an equal or higher supply voltage, up to a maximum of 3.6 V (a lower pullup supply voltage would not likely satisfy the VIH specification of the slave I^2C input buffers).
Reserved	R10	B_8	TI internal use. TI recommends an external pullup resistor.
LED_SEL_0	B15	O_1	LED enable select. Controlled by programmable DMD sequence Timing LED_SEL(1:0) — Enabled LED DLPA200x / DLPA3000 application 00 — None 01 — Red 10 — Green 11 — Blue
LED_SEL_1	B14	O_1	These signals will be driven low when RESETZ is asserted and the corresponding I/O power is supplied. They will continue to be driven low throughout the auto-initialization process. A weak, external pulldown resistor is still recommended to ensure that the LEDs are disabled when I/O power is not applied.
SPI0_CLK	A13	O_{13}	Synchronous serial port 0, clock
SPI0_CSZ0	A14	O_{13}	SPI port 1, chip select 0 (active low output) TI recommends an external pullup resistor to avoid floating inputs to the external SPI device during ASIC reset assertion.
SPI0_CSZ1	C12	O_{13}	SPI port 1, chip select 1 (active low output) TI recommends an external pullup resistor to avoid floating inputs to the external SPI device during ASIC reset assertion.
SPI0_DIN	B12	I_{12}	Synchronous serial port 0, receive data in
SPI0_DOUT	B13	O_{13}	Synchronous serial port 0, transmit data out

(1) External pullup resistor must be 8 kΩ or less.
(2) For more information about usage, see *HOST_IRQ Usage Model*.

Copyright © 2014–2016, Texas Instruments Incorporated

Pin Functions – GPIO Peripheral Interface(1)

PIN		I/O	DESCRIPTION(2)
NAME	NUMBER		
GPIO_19	M15	B_1	General purpose I/O 19 (hysteresis buffer). Options: 1. Optional GPIO. Should be configured as a logic zero GPIO output and left unconnected if not used (otherwise it will require an external pullup or pulldown to avoid a floating GPIO input). 2. MTR_SENSE, Motor Sense (Input): For Focus Motor control applications, this GPIO must be configured as an input to the DLPC343x fed from the focus motor position sensor. 3. KEYPAD_4 (input): keypad applications
GPIO_18	M14	B_1	General purpose I/O 18 (hysteresis buffer). Options: 1. Optional GPIO. Should be configured as a logic zero GPIO output and left unconnected if not used (otherwise it will require an external pullup or pulldown to avoid a floating GPIO input). 2. KEYPAD_3 (input): keypad applications
GPIO_17	L15	B_1	General purpose I/O 17 (hysteresis buffer). Options: 1. Optional GPIO. Should be configured as a logic zero GPIO output and left unconnected if not used (otherwise it will require an external pullup or pulldown to avoid a floating GPIO input). 2. KEYPAD_2 (input): keypad applications
GPIO_16	L14	B_1	General purpose I/O 16 (hysteresis buffer). Options: 1. Optional GPIO. Should be configured as a logic zero GPIO output and left unconnected if not used (otherwise it will require an external pullup or pulldown to avoid a floating GPIO input). 2. KEYPAD_1 (input): keypad applications
GPIO_15	K15	B_1	General purpose I/O 15 (hysteresis buffer). Options: 1. Optional GPIO. Should be configured as a logic zero GPIO output and left unconnected if not used (otherwise it will require an external pullup or pulldown to avoid a floating GPIO input). 2. KEYPAD_0 (input): keypad applications
GPIO_14	K14	B_1	General purpose I/O 14 (hysteresis buffer). Options: 1. Optional GPIO. Should be configured as a logic zero GPIO output and left unconnected if not used (otherwise it will require an external pullup or pulldown to avoid a floating GPIO input).
GPIO_13	J15	B_1	General purpose I/O 13 (hysteresis buffer). Options: 1. CAL_PWR (output): Intended to feed the calibration control of the successive approximation ADC light sensor. 2. Optional GPIO. Should be configured as a logic zero GPIO output and left unconnected if not used (otherwise it will require an external pullup or pulldown to avoid a floating GPIO input).
GPIO_12	J14	B_1	General purpose I/O 12 (hysteresis buffer). Options: 1. (Output) power enable control for LABB light sensor. 2. Optional GPIO. Should be configured as a logic zero GPIO output and left unconnected if not used (otherwise it will require an external pullup or pulldown to avoid a floating GPIO input).
GPIO_11	H15	B_1	General purpose I/O 11 (hysteresis buffer). Options: 1. (Output): thermistor power enable. 2. Optional GPIO. Should be configured as a logic zero GPIO output and left unconnected if not used (otherwise it will require an external pullup or pulldown to avoid a floating GPIO input).
GPIO_10	H14	B_1	General Purpose I/O 10 (hysteresis buffer). Options: 1. RC_CHARGE (output): Intended to feed the RC charge circuit of the successive approximation ADC used to control the light sensor comparator. 2. Optional GPIO. Should be configured as a logic zero GPIO output and left unconnected if not used (otherwise it will require an external pullup or pulldown to avoid a floating GPIO input).
GPIO_09	G15	B_1	General purpose I/O 09 (hysteresis buffer). Options: 1. LS_PWR (active high output): Intended to feed the power control signal of the successive approximation ADC light sensor. 2. Optional GPIO. Should be configured as a logic zero GPIO output and left unconnected if not used (otherwise it will require an external pullup or pulldown to avoid a floating GPIO input).

(1) GPIO signals must be configured through software for input, output, bidirectional, or open-drain. Some GPIO have one or more alternative use modes, which are also software configurable. The reset default for all GPIO is as an input signal. An external pullup is required for each signal configured as open-drain.
(2) DLPC343x general purpose I/O. These GPIO are software configurable.

Copyright © 2014–2016, Texas Instruments Incorporated

Pin Functions – GPIO Peripheral Interface[1] (continued)

PIN		I/O	DESCRIPTION[2]
NAME	NUMBER		
GPIO_08	G14	B_1	General purpose I/O 08 (hysteresis buffer). Options: 1. (All) Normal mirror parking request (active low): To be driven by the PROJ_ON output of the host. A logic low on this signal will cause the DLPC343x to PARK the DMD, but it will not power down the DMD (the DLPA200x does that instead). The minimum high time is 200 ms. The minimum low time is also 200 ms.
GPIO_07	F15	B_1	General purpose I/O 07 (hysteresis buffer). Options: 1. (Output): LABB output sample and hold sensor control signal. 2. (All) GPIO (bidirectional): Optional GPIO. Should be configured as a logic zero GPIO output and left unconnected if not used (otherwise it will require an external pullup or pulldown to avoid a floating GPIO input).
GPIO_06	F14	B_1	General purpose I/O 06 (hysteresis buffer). Option: 1. Optional GPIO. Should be configured as a logic zero GPIO output and left unconnected if not used. An external pulldown resistor is required to deactivate this signal during reset and auto-initialization processes.
GPIO_05	E15	B_1	General purpose I/O 05 (hysteresis buffer). Options: 1. Optional GPIO. Should be configured as a logic zero GPIO output and left unconnected if not used (otherwise it will require an external pullup or pulldown to avoid a floating GPIO input).
GPIO_04	E14	B_1	General purpose I/O 04 (hysteresis buffer). Options: 1. 3D glasses control (output): intended to be used to control the shutters on 3D glasses (Left = 1, Right = 0). 2. SPI1_CSZ1 (active-low output): optional SPI1 chip select 1 signal. An external pullup resistor is required to deactivate this signal during reset and auto-initialization processes. 3. Optional GPIO. Should be configured as a logic zero GPIO output and left unconnected if not used (otherwise it will require an external pullup or pulldown to avoid a floating GPIO input).
GPIO_03	D15	B_1	General purpose I/O 03 (hysteresis buffer). Options: 1. SPI1_CSZ0 (active low output): Optional SPI1 chip select 0 signal. An external pullup resistor is required to deactivate this signal during reset and auto-initialization processes. 2. Optional GPIO. Should be configured as a logic zero GPIO output and left unconnected if not used (otherwise it will require an external pullup or pulldown to avoid a floating GPIO input).
GPIO_02	D14	B_1	General purpose I/O 02 (hysteresis buffer). Options: 1. SPI1_DOUT (output): Optional SPI1 data output signal. 2. Optional GPIO. Should be configured as a logic zero GPIO output and left unconnected if not used (otherwise it will require an external pullup or pulldown to avoid a floating GPIO input). 3. DSI Bus Width Config 1 (input): This GPIO is sampled during boot and is used to define the number of lanes to be used for DSI operation. An external pull-up or pull-down must be used to select the desired configuration as defined in Table 1. After Boot, this GPIO can be used for other operation as long as the external pull-up/down doesn't interfere.
GPIO_01	C15	B_1	General purpose I/O 01 (hysteresis buffer). Options: 1. SPI1_CLK (output): Optional SPI1 clock signal. 2. Optional GPIO. Should be configured as a logic zero GPIO output and left unconnected if not used (otherwise it will require an external pullup or pulldown to avoid a floating GPIO input). 3. DSI Bus Width Config 1 (input): This GPIO is sampled during boot and is used to define the number of lanes to be used for DSI operation. An external pull-up or pull-down must be used to select the desired configuration as defined in Table 1. After Boot, this GPIO can be used for other operation as long as the external pull-up/down doesn't interfere.
GPIO_00	C14	B_1	General purpose I/O 00 (hysteresis buffer). Options: 1. SPI1_DIN (input): Optional SPI1 data input signal. 2. Optional GPIO. Should be configured as a logic zero GPIO output and left unconnected if not used (otherwise it will require an external pullup or pulldown to avoid a floating GPIO input).

Copyright © 2014–2016, Texas Instruments Incorporated

Table 1. GPIO_01 and GPIO_02

GPIO_02	GPIO_01	Number of DSI Data Lanes
DSI-Lane-Config_1	DSI-Lane-Config_0	
0	0	1
0	1	2
1	0	3
1	1	4

Pin Functions – Clock and PLL Support

PIN		I/O	DESCRIPTION
NAME	NUMBER		
PLL_REFCLK_I	H1	I_{11}	Reference clock crystal input. If an external oscillator is used in place of a crystal, then this pin should be used as the oscillator input.
PLL_REFCLK_O	J1	O_5	Reference clock crystal return. If an external oscillator is used in place of a crystal, then this pin should be left unconnected (that is floating with no added capacitive load).

Pin Functions – Power and Ground(1)

PIN		I/O	DESCRIPTION
NAME	NUMBER		
VDD	C5, D5, D7, D12, J4, J12, K3, L4, L12, M6, M9, D9, D13, F13, H13, L13, M10, D3, E3	PWR	Core power 1.1 V (main 1.1 V)
VDDLP12	C3	PWR	DSI PHY Low Power mode driver supply (2)
VSS	Common to all package types C4, D6, D8, D10, E4, E13, F4, G4, G12, H4, H12, J3, J13, K4, K12, L3, M4, M5, M8, M12, G13, C6, C8 Only available on DLPC343x F6, F7, F8, F9, F10, G6, G7, G8, G9, G10, H6, H7, H8, H9, H10, J6, J7, J8, J9, J10, K6, K7, K8, K9, K10	GND	Core ground (eDRAM, I/O ground, thermal ground)
VCC18	C7, C9, D4, E12, F12, K13, M11	PWR	All 1.8-V I/O power: (1.8-V power supply for all I/O other than the host or parallel interface and the SPI flash interface. This includes RESETZ, PARKZ LED_SEL, CMP, GPIO, IIC1, TSTPT, and JTAG pins)
VCC_INTF	M3, M7, N3, N7	PWR	Host or parallel interface I/O power: 1.8 to 3.3 V (Includes IIC0, PDATA, video syncs, and HOST_IRQ pins)
VCC_FLSH	D11	PWR	Flash interface I/O power:1.8 to 3.3 V (Dedicated SPI0 power pin)
VDD_PLLM	H2	PWR	MCG PLL 1.1-V power
VSS_PLLM	G3	RTN	MCG PLL return
VDD_PLLD	J2	PWR	DCG PLL 1.1-V power
VSS_PLLD	H3	RTN	DCG PLL return

(1) The only power sequencing restrictions are:
  (a) The DSI-PHY LP supply must sequence ON after the 1.1V core supply and must sequence OFF before the 1.1V core supply when fed from a separate (from VDD) supply
  (b) The VDD supply should ramp up with a 1-ms minimum rise time.
  (c) The reverse is needed at power down.

(2) It is recommended that VDDLP12 rail is tied to the VDD rail. The DSI LP supply (VDDLP12) is only used for read responses from the ASIC which are not supported. As such, there is no need to provide a separate 1.2V rail. If a separate 1.2V supply is already being used to power this rail, a voltage tolerance of ±6.67% is allowed on this separate 1.2V supply.

Copyright © 2014–2016, Texas Instruments Incorporated

Table 2. I/O Type Subscript Definition

I/O		SUPPLY REFERENCE	ESD STRUCTURE
SUBSCRIPT	DESCRIPTION		
1	1.8 LVCMOS I/O buffer with 8-mA drive	V_{cc18}	ESD diode to GND and supply rail
2	1.8 LVCMOS I/O buffer with 4-mA drive	V_{cc18}	ESD diode to GND and supply rail
3	1.8 LVCMOS I/O buffer with 24-mA drive	V_{cc18}	ESD diode to GND and supply rail
4	1.8 sub-LVDS output with 4-mA drive	V_{cc18}	ESD diode to GND and supply rail
5	1.8, 2.5, 3.3 LVCMOS with 4-mA drive	V_{cc_INTF}	ESD diode to GND and supply rail
6	1.8 LVCMOS input	V_{cc18}	ESD diode to GND and supply rail
7	1.8-, 2.5-, 3.3-V I^2C with 3-mA drive	V_{cc_INTF}	ESD diode to GND and supply rail
8	1.8-V I^2C with 3-mA drive	V_{cc18}	ESD diode to GND and supply rail
9	1.8-, 2.5-, 3.3-V LVCMOS with 8-mA drive	V_{cc_INTF}	ESD diode to GND and supply rail
10	DSI LVDS DPHY I/O	V_{DD} / V_{DDLP12}	ESD diode to GND and supply rail
11	1.8, 2.5, 3.3 LVCMOS input	V_{cc_INTF}	ESD diode to GND and supply rail
12	1.8-, 2.5-, 3.3-V LVCMOS input	V_{cc_FLSH}	ESD diode to GND and supply rail
13	1.8-, 2.5-, 3.3-V LVCMOS with 8-mA drive	V_{cc_FLSH}	ESD diode to GND and supply rail

Copyright © 2014–2016, Texas Instruments Incorporated

6 Specifications

6.1 Absolute Maximum Ratings(1)

over operating free-air temperature (unless otherwise noted)

		MIN	MAX	UNIT
SUPPLY VOLTAGE(2)(3)				
$V_{(VDD)}$ (core)		–0.3	1.21	V
$V_{(VDDLP12)}$ (core)		–0.3	1.32	V
Power + sub-LVDS		–0.3	1.96	V
$V_{(VCC_INTF)}$	Host I/O power	–0.3	3.60	V
	If 1.8-V power used	–0.3	1.99	
	If 2.5-V power used	–0.3	2.75	
	If 3.3-V power used	–0.3	3.60	
$V_{(VCC_FLSH)}$	Flash I/O power	–0.3	3.60	V
	If 1.8-V power used	–0.3	1.96	
	If 2.5-V power used	–0.3	2.72	
	If 3.3-V power used	–0.3	3.58	
$V_{(VDD_PLLM)}$ (MCG PLL)		–0.3	1.21	V
$V_{(VDD_PLLD)}$ (1DCG PLL)		–0.3	1.21	V
GENERAL				
T_J	Operating junction temperature	–30	125	°C
T_{stg}	Storage temperature	–40	125	°C

(1) Stresses beyond those listed under *absolute maximum ratings* may cause permanent damage to the device. These are stress ratings only, which do not imply functional operation of the device at these or any other conditions beyond those indicated under *recommended operating conditions*. Exposure to absolute-maximum-rated conditions for extended periods may affect device reliability.
(2) All voltage values are with respect to GND.
(3) Overlap currents, if allowed to continue flowing unchecked, not only increase total power dissipation in a circuit, but degrade the circuit reliability, thus shortening its usual operating life.

6.2 ESD Ratings

			VALUE	UNIT
$V_{(ESD)}$(1)	Electrostatic discharge	Human body model (HBM), per ANSI/ESDA/JEDEC JS-001, all pins(2)	±2000	V
		Charged device model (CDM), per JEDEC specification JESD22-C101, all pins(3)	±500	

(1) Electrostatic discharge (ESD) to measure device sensitivity and immunity to damage caused by assembly line electrostatic discharges in to the device.
(2) JEDEC document JEP155 states that 500-V HBM allows safe manufacturing with a standard ESD control process.
(3) JEDEC document JEP157 states that 250-V CDM allows safe manufacturing with a standard ESD control process.

Copyright © 2014–2016, Texas Instruments Incorporated

6.3 Recommended Operating Conditions

over operating free-air temperature range (unless otherwise noted)

			MIN	NOM	MAX	UNIT
$V_{(VDD)}$	Core power 1.1 V (main 1.1 V)	±5% tolerance	1.045	1.1	1.155	V
$V_{(VDDLP12)}$	DSI PHY Low Power mode driver supply	±5% tolerance See (1)(2)	1.045	1.10	1.155	V
$V_{(VCC18)}$	All 1.8-V I/O power: (1.8-V power supply for all I/O other than the host or parallel interface and the SPI flash interface. This includes RESETZ, PARKZ LED_SEL, CMP, GPIO, IIC1, TSTPT, and JTAG pins.)	±8.5% tolerance	1.64	1.8	1.96	V
$V_{(VCC_INTF)}$	Host or parallel interface I/O power: 1.8 to 3.3 V (includes IIC0, PDATA, video syncs, and HOST_IRQ pins)	±8.5% tolerance See (3)	1.64	1.8	1.96	V
			2.28	2.5	2.72	
			3.02	3.3	3.58	
$V_{(VCC_FLSH)}$	Flash interface I/O power:1.8 to 3.3 V	±8.5% tolerance See (3)	1.64	1.8	1.96	V
			2.28	2.5	2.72	
			3.02	3.3	3.58	
$V_{(VDD_PLLM)}$	MCG PLL 1.1-V power	±9.1% tolerance See (4)	1.025	1.1	1.155	V
$V_{(VDD_PLLD)}$	DCG PLL 1.1-V power	±9.1% tolerance See (4)	1.025	1.1	1.155	V
T_A	Operating ambient temperature range(5)		–30		85	°C
T_J	Operating junction temperature		–30		105	°C

(1) It is recommended that VDDLP12 rail is tied to the VDD rail. The DSI LP supply (VDDLP12) is only used for read responses from the ASIC which are not supported. As such, there is no need to provide a separate 1.2V rail. If a separate 1.2V supply is already being used to power this rail, a voltage tolerance of ±6.67% is allowed on this separate 1.2V supply.
(2) When the DSI-PHY LP supply (VDDLP12) is fed from a separate (from VDD) supply, the VDDLP12 power must sequence ON after the 1.1V core supply and must sequence OFF before the 1.1V core supply.
(3) These supplies have multiple valid ranges.
(4) These I/O supply ranges are wider to facilitate additional filtering.
(5) The operating ambient temperature range assumes 0 forced air flow, a JEDEC JESD51 junction-to-ambient thermal resistance value at 0 forced air flow ($R_{\theta JA}$ at 0 m/s), a JEDEC JESD51 standard test card and environment, along with min and max estimated power dissipation across process, voltage, and temperature. Thermal conditions vary by application, which will impact $R_{\theta JA}$. Thus, maximum operating ambient temperature varies by application.
(a) $T_{a_min} = T_{j_min} – (P_{d_min} \times R_{\theta JA}) = –30°C – (0.0W \times 30.3°C/W) = –30°C$
(b) $T_{a_max} = T_{j_max} – (P_{d_max} \times R_{\theta JA}) = +105°C – (0.348W \times 30.3°C/W) = +94.4°C$

6.4 Thermal Information

THERMAL METRIC(1)			DLPC343x ZEZ (NFBGA) 201 PINS	DLPC343x ZVB (NFBGA) 176 PINS	UNIT
$R_{\theta JC}$	Junction-to-case thermal resistance		10.1	11.2	°C/W
$R_{\theta JA}$	Junction-to-air thermal resistance	at 0 m/s of forced airflow(2)	28.8	30.3	°C/W
		at 1 m/s of forced airflow(2)	25.3	27.4	°C/W
		at 2 m/s of forced airflow(2)	24.4	26.6	°C/W
ψ_{JT}(3)	Temperature variance from junction to package top center temperature, per unit power dissipation		.23	.27	°C/W

(1) For more information about traditional and new thermal metrics, see the *Semiconductor and IC Package Thermal Metrics* application report, SPRA953.
(2) Thermal coefficients abide by JEDEC Standard 51. $R_{\theta JA}$ is the thermal resistance of the package as measured using a JEDEC defined standard test PCB. This JEDEC test PCB is not necessarily representative of the DLPC343x PCB and thus the reported thermal resistance may not be accurate in the actual product application. Although the actual thermal resistance may be different , it is the best information available during the design phase to estimate thermal performance.
(3) Example: (0.5 W) × (0.2 C/W) ≈ 1.00°C temperature rise.

Copyright © 2014–2016, Texas Instruments Incorporated

6.5 Electrical Characteristics over Recommended Operating Conditions (1)(2)(3)(4)

PARAMETER		TEST CONDITIONS(5)(6)	MIN	TYP(7)	MAX(8)	UNIT
$V_{(VDD)}$ + $V_{(VDDLP12)}$	Core current 1.1 V (main 1.1 V)	IDLE disabled, 720p, 60 Hz		161	334	mA
		IDLE disabled, 720p, 120 Hz		185	368	
$V_{(VDD_PLLM)}$	MCG PLL 1.1 V current	IDLE disabled, 720p, 60 Hz		4	7	mA
		IDLE disabled, 720p, 120 Hz		4	7	
$V_{(VDD_PLLD)}$	DCG PLL 1.1 V current	IDLE disabled, 720p, 60 Hz		4	7	mA
		IDLE disabled, 720p, 120 Hz		4	7	
V(VDD) + V(VDD_PLLM) + V(VDD_PLLD)	Core Current 1.1 V + MCG PLL 1.1 V current + DCG PLL 1.1 V current	IDLE disabled, 720p, 60 Hz		169	348	mA
		IDLE disabled, 720p, 120 Hz		193	382	
$V_{(VCC18)}$	Main 1.8 V I/O current: 1.8 V power supply for all I/O other than the host or parallel interface and the SPI flash interface. This includes sub-LVDS DMD I/O , RESETZ, PARKZ, LED_SEL, CMP, GPIO, IIC1, TSTPT and JTAG pins	IDLE disabled, 720p, 60 Hz		13	18	mA
		IDLE disabled, 720p, 120 Hz		13	18	
$V_{(VCC_INTF)}$	Host or parallel interface I/O current: 1.8 to 3.3 V (includes IIC0, PDATA, video syncs, and HOST_IRQ pins)	IDLE disabled, 720p, 60 Hz		2	3	mA
		IDLE disabled, 720p, 120 Hz		4	6	
$V_{(VCC_FLSH)}$	Flash interface I/O current: 1.8 to 3.3 V	IDLE disabled, 720p, 60 Hz		1	1.5	mA
		IDLE disabled, 720p, 120 Hz		1	1.5	
$V_{(VCC18)}$ + $V_{(VCC_INTF)}$ + $V_{(VCC_FLSH)}$	Main 1.8 V I/O current + VCC_INTF current + VCC_FLSH current	IDLE disabled, 720p, 60 Hz		16	22.5	mA
		IDLE disabled, 720p, 120 Hz		18	25.5	

(1) Assumes 12.5% activity factor, 30% clock gating on appropriate domains, and mixed SVT or HVT cells
(2) Programmable host and flash I/O are at minimum voltage (that is 1.8 V) for this typical scenario.
(3) Max currents column use typical motion video as the input. The typical currents column uses SMPTE color bars as the input.
(4) Some applications (that is, high-resolution 3D) may be forced to use 1-oz copper to manage ASIC package heat.
(5) Input image is 1280 × 720 (720p) 24-bits on the parallel interface at the frame rate shown with a 0.3-inch 720p DMD.
(6) In normal operation while displaying an image with CAIC enabled.
(7) Assumes typical case power PVT condition = nominal process, typical voltage, typical temperature (55°C junction). 720p resolution.
(8) Assumes worse case power PVT condition = corner process, high voltage, high temperature (105°C junction), 720p resolution.

Copyright © 2014–2016, Texas Instruments Incorporated

6.6 Electrical Characteristics(1)(2)

over operating free-air temperature range (unless otherwise noted)

PARAMETER(3)			TEST CONDITIONS	MIN	TYP	MAX	UNIT
V_{IH}	High-level input threshold voltage	I^2C buffer (I/O type 7)		0.7 × VCC_INTF		(1)	V
		1.8-V LVTTL (I/O type 1, 2, 3, 5, 6, 8, 9, 11, 12, 13)		1.17		3.6	
		1.8-V LVTTL (I/O type 1, 6) identified below: (2) CMP_OUT; PARKZ; RESETZ; GPIO 0 →19		1.3		3.6	
		2.5-V LVTTL (I/O type 5, 9, 11, 12, 13)		1.7		3.6	
		3.3-V LVTTL (I/O type 5, 9, 11, 12, 13)		2		3.6	
V_{IL}	Low-level input threshold voltage	I^2C buffer (I/O type 7)		–0.5		0.3 × VCC_INTF	V
		1.8-V LVTTL (I/O type 1, 2, 3, 5, 6, 8, 9, 11, 12, 13)		–0.3		0.63	
		1.8-V LVTTL (I/O type 1, 6) identified below: (2) CMP_OUT; PARKZ; RESETZ; GPIO_00 through GPIO_19		–0.3		0.5	
		2.5-V LVTTL (I/O type 5, 9, 11, 12, 13)		–0.3		0.7	
		3.3-V LVTTL (I/O type 5, 9, 11, 12, 13)		–0.3		0.8	
V_{CM}	Steady-state common mode voltage	1.8 sub-LVDS (DMD high speed) (I/O type 4)		0.8	0.9	1	mV
$\lvert V_{OD} \rvert$	Differential output magnitude	1.8 sub-LVDS (DMD high speed) (I/O type 4)			200		mV
V_{OH}	High-level output voltage	1.8-V LVTTL (I/O type 1, 2, 3, 5, 6, 8, 9, 11, 12, 13)		1.35			V
		2.5-V LVTTL (I/O type 5, 9, 11, 12, 13)		1.7			
		3.3-V LVTTL (I/O type 5, 9, 11, 12, 13)		2.4			
		1.8 sub-LVDS – DMD high speed (I/O type 4)			1		
V_{OL}	Low-level output voltage	I^2C buffer (I/O type 7)	VCC_INTF > 2 V			0.4	V
		I^2C buffer (I/O type 7)	VCC_INTF < 2 V			0.2 × VCC_INTF	
		1.8-V LVTTL (I/O type 1, 2, 3, 5, 6, 8, 9, 11, 12, 13)				0.45	
		2.5 V LVTTL (I/O type 5, 9, 11, 12, 13)				0.7	
		3.3 V LVTTL (I/O type 5, 9, 11, 12, 13)				0.4	
		1.8 sub-LVDS – DMD high speed (I/O type 4)			0.8		

(1) I/O is high voltage tolerant; that is, if VCC = 1.8 V, the input is 3.3-V tolerant, and if VCC = 3.3 V, the input is 5-V tolerant.
(2) ASIC pins: CMP_OUT; PARKZ; RESETZ; GPIO_00 through GPIO_19 have slightly varied V_{IH} and V_{IL} range from other 1.8-V I/O.
(3) The number inside each parenthesis for the I/O refers to the type defined in Table 2.

Copyright © 2014–2016, Texas Instruments Incorporated

Electrical Characteristics[1][2] (continued)

over operating free-air temperature range (unless otherwise noted)

PARAMETER[3]			TEST CONDITIONS	MIN	TYP	MAX	UNIT
I_{OH}	High-level output current	1.8-V LVTTL (I/O type 1, 2, 3, 5, 6, 8, 9, 11, 12, 13)	4 mA	2			mA
		1.8-V LVTTL (I/O type 1, 2, 3, 5, 6, 8, 9, 11, 12, 13)	8 mA	3.5			
		1.8-V LVTTL (I/O type 1, 2, 3, 5, 6, 8, 9, 11, 12, 13)	24 mA	10.6			
		2.5-V LVTTL (I/O type 5)	4 mA	5.4			
		2.5-V LVTTL (I/O type 9, 13)	8 mA	10.8			
		2.5-V LVTTL (I/O type 5, 9, 11, 12, 13)	24 mA	28.7			
		3.3-V LVTTL (I/O type 5)	4 mA	7.8			
		3.3-V LVTTL (I/O type 9, 13)	8 mA	15			
I_{OL}	Low-level output current	I^2C buffer (I/O type 7)		3			mA
		1.8-V LVTTL (I/O type 1, 2, 3, 5, 6, 8, 9, 11, 12, 13)	4 mA	2.3			
		1.8-V LVTTL (I/O type 1, 2, 3, 5, 6, 8, 9, 11, 12, 13)	8 mA	4.6			
		1.8-V LVTTL (I/O type 1, 2, 3, 5, 6, 8, 9, 11, 12, 13)	24 mA	13.9			
		2.5-V LVTTL (I/O type 5)	4 mA	5.2			
		2.5-V LVTTL (I/O type 9, 13)	8 mA	10.4			
		2.5-V LVTTL (I/O type 5, 9, 11, 12, 13)	24 mA	31.1			
		3.3-V LVTTL (I/O type 5)	4 mA	4.4			
		3.3-V LVTTL (I/O type 9, 13)	8 mA	8.9			
I_{OZ}	High-impedance leakage current	I^2C buffer (I/O type 7)	0.1 × VCC_INTF < VI < 0.9 × VCC_INTF	–10		10	µA
		1.8-V LVTTL (I/O type 1, 2, 3, 5, 6, 8, 9, 11, 12, 13)		–10		10	
		2.5-V LVTTL (I/O type 5, 9, 11, 12, 13)		–10		10	
		3.3-V LVTTL (I/O type 5, 9, 11, 12, 13)		–10		10	
C_I	Input capacitance (including package)	I^2C buffer (I/O type 7)				5	pF
		1.8-V LVTTL (I/O type 1, 2, 3, 5, 6, 8, 9, 11, 12, 13)		2.6		3.5	
		2.5-V LVTTL (I/O type 5, 9, 11, 12, 13)		2.6		3.5	
		3.3-V LVTTL (I/O type 5, 9, 11, 12, 13)		2.6		3.5	
		1.8 sub-LVDS – DMD high speed (I/O type 4)				3	

Copyright © 2014–2016, Texas Instruments Incorporated

Table 3. Internal Pullup and Pulldown Characteristics(1)(2)

INTERNAL PULLUP AND PULLDOWN RESISTOR CHARACTERISTICS	VCCIO	MIN	MAX	UNIT
Weak pullup resistance	3.3 V	29	63	kΩ
	2.5 V	38	90	kΩ
	1.8 V	56	148	kΩ
Weak pulldown resistance	3.3 V	30	72	kΩ
	2.5 V	36	101	kΩ
	1.8 V	52	167	kΩ

(1) The resistance is dependent on the supply voltage level applied to the I/O.
(2) An external 8-kΩ pullup or pulldown (if needed) would work for any voltage condition to correctly pull enough to override any associated internal pullups or pulldowns.

Copyright © 2014–2016, Texas Instruments Incorporated

6.7 High-Speed Sub-LVDS Electrical Characteristics

over operating free-air temperature range (unless otherwise noted)

PARAMETER		MIN	NOM	MAX	UNIT
V_{CM}	Steady-state common mode voltage	0.8	0.9	1.0	V
V_{CM} (Δpp)(1)	V_{CM} change peak-to-peak (during switching)			75	mV
V_{CM} (Δss)(1)	V_{CM} change steady state	–10		10	mV
$\|V_{OD}\|$(2)	Differential output voltage magnitude		200		mV
V_{OD} (Δ)	V_{OD} change (between logic states)	–10		10	mV
V_{OH}	Single-ended output voltage high		1.00		V
V_{OL}	Single-ended output voltage low		0.80		V
t_R(2)	Differential output rise time			250	ps
t_F(2)	Differential output fall time			250	ps
t_{MAX}	Max switching rate			1200	Mbps
DCout	Output duty cycle	45%	50%	55%	
Tx_{term}(1)	Internal differential termination	80	100	120	Ω
Tx_{load}	100-Ω differential PCB trace (50-Ω transmission lines)	0.5		6	inches

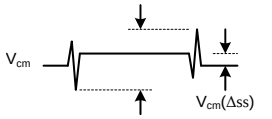

(1) Definition of V_{CM} changes:

(2) Note that V_{OD} is the differential voltage swing measured across a 100-Ω termination resistance connected directly between the transmitter differential pins. $|V_{OD}|$ is the magnitude of this voltage swing relative to 0. Rise and fall times are defined for the differential

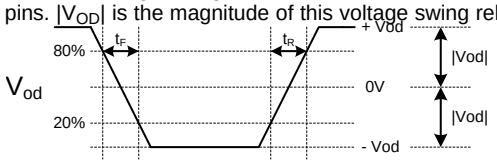

Differential Output Signal

V_{OD} signal as follows: (Note Vcm is removed when the signals are viewed differentially)

Copyright © 2014–2016, Texas Instruments Incorporated

6.8 Low-Speed SDR Electrical Characteristics

over operating free-air temperature range (unless otherwise noted)

PARAMETER	ID	TEST CONDITIONS	MIN	MAX	UNIT
Operating voltage	VCC18 (all signal groups)		1.64	1.96	V
DC input high voltage	VIHD(DC) Signal group 1	All	0.7 × VCC18	VCC18 + 0.5	V
DC input low voltage (1)	VILD(DC) Signal group 1	All	–0.50	0.3 × VCC18	V
AC input high voltage (2)	VIHD(AC) Signal group 1	All	0.8 × VCC18	VCC18 + 0.5	V
AC input low voltage	VILD(AC) Signal group 1	All	–0.5	0.2 × VCC18	V
Slew rate (3)(4)(5)(6)	Signal group 1		1	3.0	V/ns
	Signal group 2		0.25		
	Signal group 3		0.5		

(1) VILD(AC) min applies to undershoot.
(2) VIHD(AC) max applies to overshoot.
(3) Signal group 1 output slew rate for rising edge is measured between VILD(DC) to VIHD(AC).
(4) Signal group 1 output slew rate for falling edge is measured between VIHD(DC) to VILD(AC).
(5) Signal group 1: See Figure 3.
(6) Signal groups 2 and 3 output slew rate for rising edge is measured between VILD(AC) to VIHD(AC).

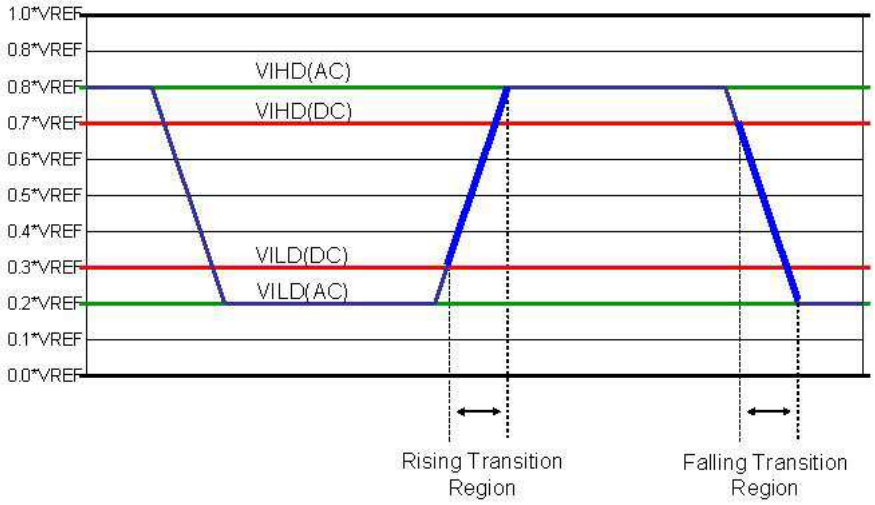

Figure 3. Low Speed (LS) I/O Input Thresholds

6.9 System Oscillators Timing Requirements(1)

			MIN	MAX	UNIT
f_{clock}	Clock frequency, MOSC(2)	24-MHz oscillator	23.998	24.002	MHz
t_c	Cycle time, MOSC(2)	24-MHz oscillator	41.670	41.663	ns
$t_{w(H)}$	Pulse duration(3), MOSC, high	50% to 50% reference points (signal)		40 t_c%	
$t_{w(L)}$	Pulse duration(3), MOSC, low	50% to 50% reference points (signal)		40 t_c%	
t_t	Transition time(3), MOSC, $t_t = t_f$ / t_r	20% to 80% reference points (signal)		10	ns
t_{jp}	Long-term, peak-to-peak, period jitter(3), MOSC (that is the deviation in period from ideal period due solely to high frequency jitter)			2%	

(1) The I/O pin TSTPT_6 must be left open for 24 MHz timing to work properly inside the DLPC343x.
(2) The frequency accuracy for MOSC is ±200 PPM. (This includes impact to accuracy due to aging, temperature, and trim sensitivity.) The MOSC input cannot support spread spectrum clock spreading.
(3) Applies only when driven through an external digital oscillator.

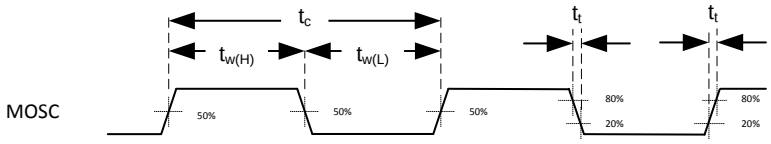

Figure 4. System Oscillators

6.10 Power-Up and Reset Timing Requirements

NUMBER				MIN	MAX	UNIT
1	$t_{w(L)}$	Pulse duration, inactive low, RESETZ	50% to 50% reference points (signal)	1.25		µs
2	t_t	Transition time, RESETZ(1), $t_t = t_f$ / t_r	20% to 80% reference points (signal)		0.5	µs

(1) For more information on RESETZ, see *Pin Configuration and Functions*.

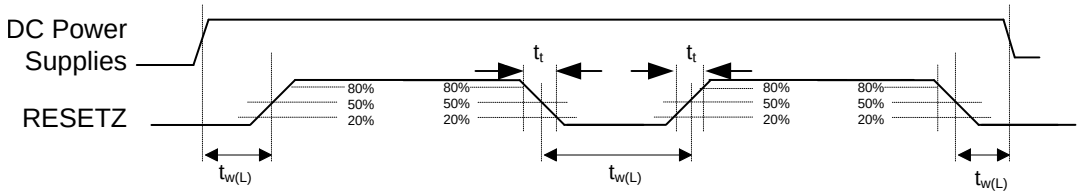

Figure 5. Power-Up and Power-Down RESETZ Timing

Copyright © 2014–2016, Texas Instruments Incorporated

6.11 Parallel Interface Frame Timing Requirements

			MIN	MAX	UNIT
t_{p_vsw}	Pulse duration – VSYNC_WE high	50% reference points	1		lines
t_{p_vbp}	Vertical back porch (VBP) – time from the leading edge of VSYNC_WE to the leading edge HSYNC_CS for the first active line (see (1))	50% reference points	2		lines
t_{p_vfp}	Vertical front porch (VFP) – time from the leading edge of the HSYNC_CS following the last active line in a frame to the leading edge of VSYNC_WE (see (1))	50% reference points	1		lines
t_{p_tvb}	Total vertical blanking – time from the leading edge of HSYNC_CS following the last active line of one frame to the leading edge of HSYNC_CS for the first active line in the next frame. (This is equal to the sum of VBP (t_{p_vbp}) + VFP (t_{p_vfp}).)	50% reference points	See (1)		lines
t_{p_hsw}	Pulse duration – HSYNC_CS high	50% reference points	4	128	PCLKs
t_{p_hbp}	Horizontal back porch – time from rising edge of HSYNC_CS to rising edge of DATAEN_CMD	50% reference points	4		PCLKs
t_{p_hfp}	Horizontal front porch – time from falling edge of DATAEN_CMD to rising edge of HSYNC_CS	50% reference points	8		PCLKs
t_{p_thb}	Total horizontal blanking – sum of horizontal front and back porches	50% reference points	See (2)		PCLKs

(1) The minimum total vertical blanking is defined by the following equation: $t_{p_tvb}(min) = 6 + [8 \times Max(1, Source_ALPF/ DMD_ALPF)]$ lines where:
  (a) SOURCE_ALPF = Input source active lines per frame
  (b) DMD_ALPF = Actual DMD used lines per frame supported

(2) Total horizontal blanking is driven by the max line rate for a given source which will be a function of resolution and orientation. The following equation can be applied for this: t_{p_thb} = Roundup[(1000 × f_{clock})/ LR] – APPL where:
  (a) f_{clock} = Pixel clock rate in MHz
  (b) LR = Line rate in kHz
  (c) APPL is the number of active pixels per (horizontal) line.
  (d) If t_{p_thb} is calculated to be less than t_{p_hbp} + t_{p_hfp} then the pixel clock rate is too low or the line rate is too high, and one or both must be adjusted.

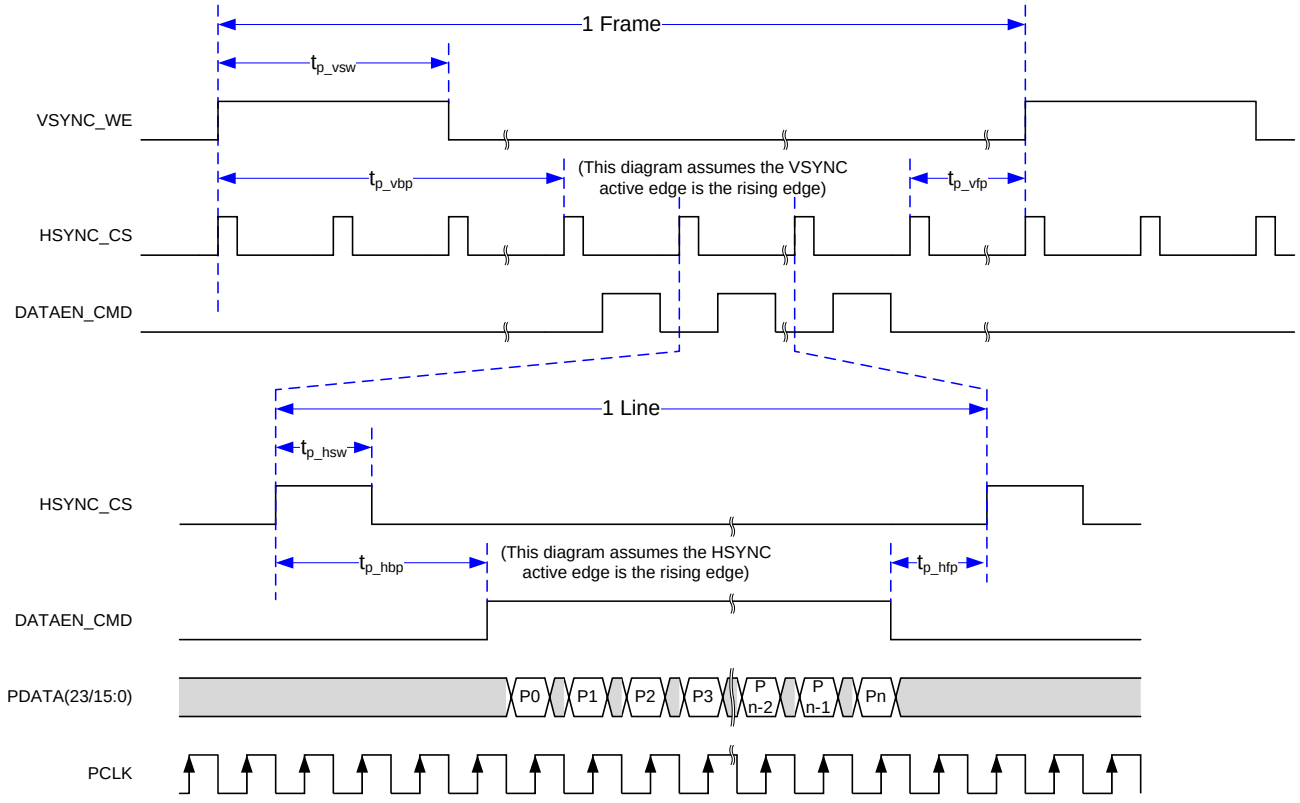

Figure 6. Parallel Interface Frame Timing

6.12 Parallel Interface General Timing Requirements(1)

			MIN	MAX	UNIT
f_{clock}	Clock frequency, PCLK		1.0	150.0	MHz
t_{p_clkper}	Clock period, PCLK	50% reference points	6.66	1000	ns
t_{p_clkjit}	Clock jitter, PCLK	Max f_{clock}	see (2)	see (2)	
t_{p_wh}	Pulse duration low, PCLK	50% reference points	2.43		ns
t_{p_wl}	Pulse duration high, PCLK	50% reference points	2.43		ns
t_{p_su}	Setup time – HSYNC_CS, DATEN_CMD, PDATA(23:0) valid before the active edge of PCLK	50% reference points	0.9		ns
t_{p_h}	Hold time – HSYNC_CS, DATEN_CMD, PDATA(23:0) valid after the active edge of PCLK	50% reference points	0.9		ns
t_t	Transition time – all signals	20% to 80% reference points	0.2	2.0	ns

(1) The active (capture) edge of PCLK for HSYNC_CS, DATEN_CMD and PDATA(23:0) is software programmable, but defaults to the rising edge.
(2) Clock jitter (in ns) should be calculated using this formula: Jitter = [1 / f_{clock} – 5.76 ns]. Setup and hold times must be met during clock jitter.

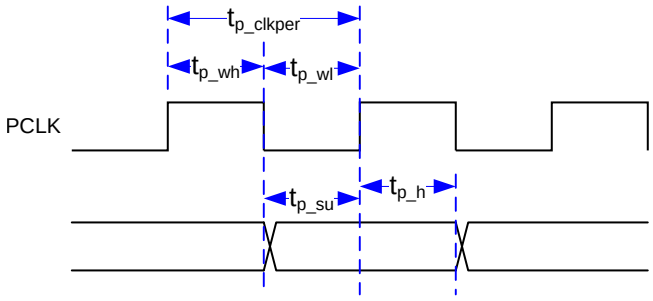

Figure 7. Parallel Interface General Timing

Copyright © 2014–2016, Texas Instruments Incorporated

6.13 BT656 Interface General Timing Requirements(1)

The DLPC343x ASIC input interface supports the industry standard BT.656 parallel video interface. See the appropriate ITU-R BT.656 specification for detailed interface timing requirements.

			MIN	MAX	UNIT
f_{clock}	Clock frequency, PCLK		1.0	33.5	MHz
t_{p_clkper}	Clock period, PCLK	50% reference points	29.85	1,000	ns
t_{p_clkjit}	Clock jitter, PCLK	Max f_{clock}	See (2)	See (2)	
t_{p_wh}	Pulse duration low, PCLK	50% reference points	10.0		ns
t_{p_wl}	Pulse duration high, PCLK	50% reference points	10.0		ns
t_{p_su}	Setup time – PDATA(7:0) before the active edge of PCLK	50% reference points	3.0		ns
t_{p_h}	Hold time – PDATA(7:0) after the active edge of PCLK	50% reference points	0.9		ns
t_t	Transition time – all signals	20% to 80% reference points	0.2	3.0	ns

(1) The BT.656 interface accepts 8-bits per color, 4:2:2 YCb/Cr data encoded per the industry standard through PDATA(7:0) on the active edge of PCLK (that is programmable). See Figure 8.
(2) Clock jitter should be calculated using this formula: Jitter = [1 / f_{clock} – 5.76 ns]. Setup and hold times must be met during clock jitter.

BT.656 Bus Mode – YCrCb 4:2:2 Source

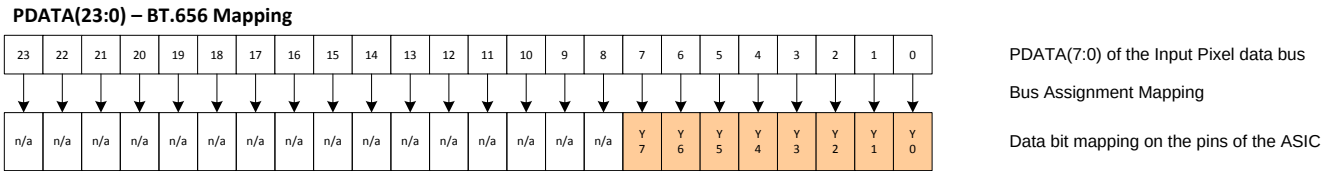

A. BT.656 data bits should be mapped to the DLPC343x PDATA bus as shown.

Figure 8. DLPC343x PDATA Bus – BT.656 Interface Mode Bit Mapping

6.14 DSI Host Timing Requirements

This section describes timing requirements for specific host minimum values that are higher than those specified in the MIPI standards. It is critical for proper operation that the host meet these minimum timing requirements for specified MIPI parameters.

			MIN	MAX	UNIT
Supported Frequency Lane	Clock Lane		80	235	MHz
	Data Lane	effective data rate	160	470	Mbps
	Number of Data Lanes	selectable	1	4	Lanes
$T_{HS\text{-}PREPARE}$+ $T_{HS\text{-}ZERO}$	During a LP to HS transition, the time that the transmitter drives the HS-0 state prior to transmitting the Sync sequence	80 MHz to 94 MHz HS Clock	565		ns
		95 MHz to 235 MHz HS Clock(1)	465(2)		ns
$T_{HS\text{-}SETTLE}$	Time interval during which the HS reciever shall ignore any data lane HS transitions, starting from the beginning of $T_{HS\text{-}PREPARE}$. The HS receiver shall ignore any data lane transitions before the minimum value, and shall respond to any data lane transitions after the maximum value	80 MHz to 94 MHz HS Clock		565(3)	ns
		95 MHz to 235 MHz HS Clock		465(3)	ns

(1) Example: At 172 MHz and $T_{HS\text{-}PREPARE}$ = 51.46ns -> 51.46ns + $T_{HS\text{-}ZERO}$ >= 465ns. Therefore $T_{HS\text{-}ZERO}$ >= 413.54ns.
(2) Minimum values are higher than those required by the MIPI standard. $T_{HS\text{-}PREPARE}$ must be within the MIPI specified range.
(3) Maximum values are higher than those required by the MIPI standard.

Copyright © 2014–2016, Texas Instruments Incorporated

6.15 Flash Interface Timing Requirements(1)(2)

The DLPC343x ASIC flash memory interface consists of a SPI flash serial interface with a programmable clock rate. The DLPC343x can support 1- to 16-Mb flash memories.

			MIN	MAX	UNIT
f_{clock}	Clock frequency, SPI_CLK	See (3)	1.42	36.0	MHz
t_{p_clkper}	Clock period, SPI_CLK	50% reference points	704	27.7	ns
t_{p_wh}	Pulse duration low, SPI_CLK	50% reference points	352		ns
t_{p_wl}	Pulse duration high, SPI_CLK	50% reference points	352		ns
t_t	Transition time – all signals	20% to 80% reference points	0.2	3.0	ns
t_{p_su}	Setup time – SPI_DIN valid before SPI_CLK falling edge	50% reference points	10.0		ns
t_{p_h}	Hold time – SPI_DIN valid after SPI_CLK falling edge	50% reference points	0.0		ns
t_{p_clqv}	SPI_CLK clock falling edge to output valid time – SPI_DOUT and SPI_CSZ	50% reference points		1.0	ns
t_{p_clqx}	SPI_CLK clock falling edge output hold time – SPI_DOUT and SPI_CSZ	50% reference points	–3.0	3.0	ns

(1) Standard SPI protocol is to transmit data on the falling edge of SPI_CLK and capture data on the rising edge. The DLPC343x does transmit data on the falling edge, but it also captures data on the falling edge rather than the rising edge. This provides support for SPI devices with long clock-to-Q timing. DLPC343x hold capture timing has been set to facilitate reliable operation with standard external SPI protocol devices.
(2) With the above output timing, DLPC343x provides the external SPI device 8.2-ns input set-up and 8.2-ns input hold, relative to the rising edge of SPI_CLK.
(3) This range includes the 200 ppm of the external oscillator (but no jitter).

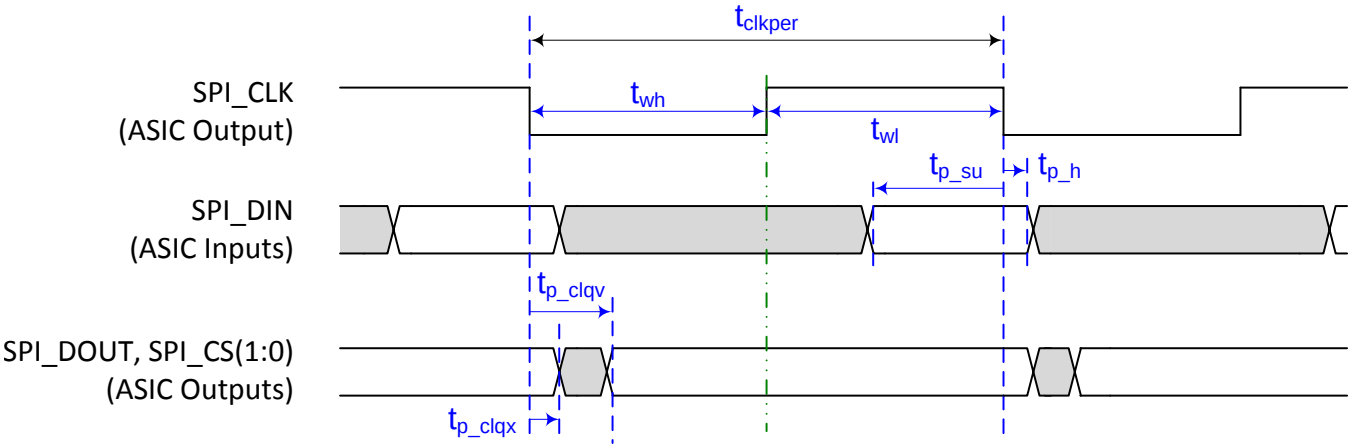

Figure 9. Flash Interface Timing

Copyright © 2014–2016, Texas Instruments Incorporated

7 Parameter Measurement Information

7.1 HOST_IRQ Usage Model

- While reset is applied HOST_IRQ will reset to tri-state (an external pullup pulls the line high).
- HOST_IRQ will remain tri-state (pulled high externally) until the microprocessor boot completes. While the signal is pulled high, this indicates that the ASIC is performing boot-up and auto-initialization.
- As soon as possible after boot-up, the microprocessor will drive HOST_IRQ to a logic high state to indicate that the ASIC is continuing to perform auto-initialization (no real state change occurs on the external signal)
- Upon completion of auto-initialization, software will set HOST_IRQ to a logic low state to indicate the completion of auto-initialization. (At the falling edge, the system is said to enter the INIT_DONE state.)
- The 500-ms max shown from the rising edge of RESETZ to the falling edge of HOST_IRQ may become longer than 500 ms if many commands are added to the autoinit batch file in flash which automatically runs at power up.

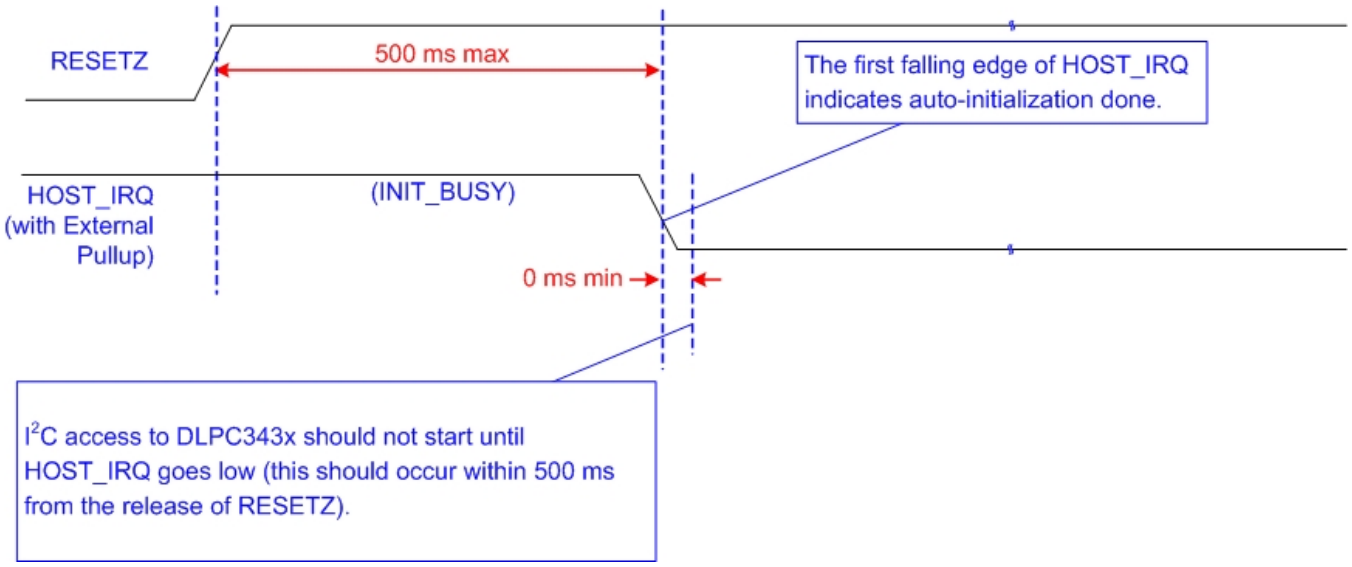

Figure 10. Host IRQ Timing

7.2 Input Source

Table 4. Supported Input Source Ranges(1)(2)(3)(4)

INTERFACE	BITS / PIXEL (5)	IMAGE TYPE	SOURCE RESOLUTION RANGE(6)				FRAME RATE RANGE
			HORIZONTAL		VERTICAL		
			Landscape	Portrait	Landscape	Portrait	
Parallel	24 max	2D only	320 to 1280	200 to 800	200 to 800	320 to 1280	10 to 122 Hz
Parallel	24 max	3D only	320 to 1280	200 to 720	200 to 720	320 to 1280	98 to 102 Hz 118 to 122 Hz
DSI	24 max	2D only	320 to 1280	200 to 800	200 to 800	320 to 1280	10 to 122 Hz
DSI	24 max	3D only	320 to 1280	200 to 720	200 to 720	320 to 1280	98 to 102 Hz 118 to 122 Hz
BT.656-NTSC (7)	See (8)	2D only	720	n/a	240	n/a	60 ±2 Hz
BT.656-PAL (7)	See (8)	2D only	720	n/a	288	n/a	50 ±2 Hz

(1) The user must stay within specifications for all source interface parameters such as max clock rate and max line rate.
(2) The max DMD size for all rows in the table is 1280 × 720.
(3) To achieve the ranges stated, the composer-created firmware used must be defined to support the source parameters used.
(4) These interfaces are supported with the DMD sequencer sync mode command (3Bh) set to auto.
(5) Bits / Pixel does not necessarily equal the number of data pins used on the DLPC343x. Fewer pins are used if multiple clocks are used per pixel transfer.
(6) By using an I2C command, portrait image inputs can be rotated on the DMD by minus 90 degrees so that the image is displayed in landscape format.
(7) All parameters in this row follow the BT.656 standard. The image format is always landscape.
(8) BT.656 uses 16-bit 4:2:2 YCr/Cb.

7.2.1 Input Source - Frame Rates and 3-D Display Orientation

For 3D sources on the parallel or MIPI DSI interface, images must be frame sequential (L, R, L, ...) when input to the DLPC343x. Any processing required to unpack 3D images and to convert them to frame sequential must be done by external electronics prior to inputting the images to the DLPC343x. Each 3D source frame input must contain a single eye frame of data separated by a VSYNC where an eye frame contains image data for a single left or right eye. The signal 3DR input to the DLPC343x tells whether the input frame is for the left eye or right eye.

Each DMD frame will be displayed at the same rate as the input interface frame rate. Typical timing for a 50-Hz or 60-Hz 3D HDMI source frame, the input interface of the DLPC343x, and the DMD is shown in Figure 11. GPIO_04 is optionally sent to a transmitter on the system PCB for wirelessly transmitting a sync signal to 3D glasses. The glasses are then in phase with the DMD images being displayed. Alternately, 3-D Glasses Operation shows how DLP Link pulses can be used instead.

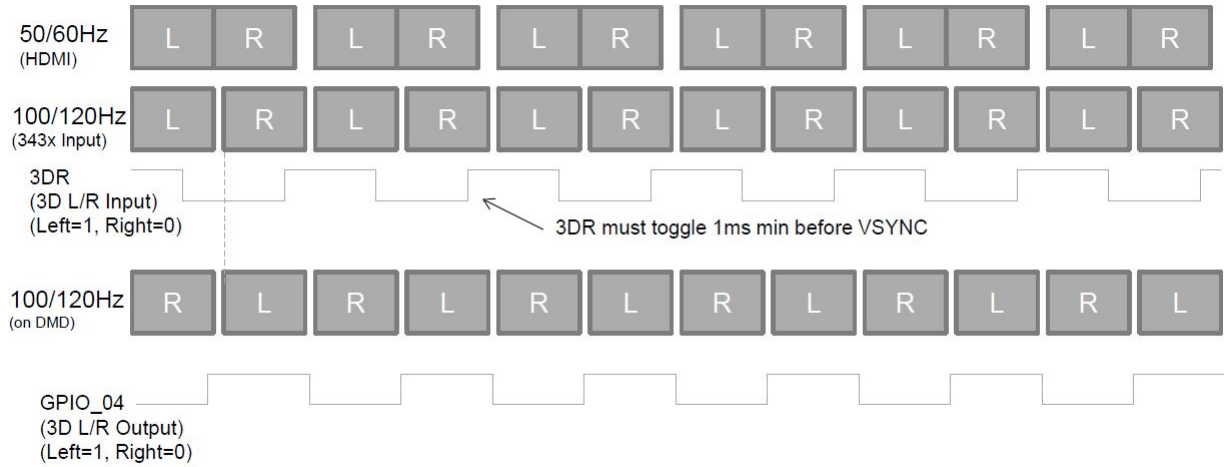

Figure 11. DLPC343x L/R Frame and Signal Timing

Copyright © 2014–2016, Texas Instruments Incorporated

7.2.2 Parallel Interface Supports Six Data Transfer Formats

- 24-bit RGB888 or 24-bit YCrCb888 on a 24 data wire interface
- 18-bit RGB666 or 18-bit YCrCb666 on a 18 data wire interface
- 16-bit RGB565 or 16-bit YCrCb565 on a 16 data wire interface
- 16-bit YCrCb 4:2:2 (standard sampling assumed to be Y0Cb0, Y1Cr0, Y2Cb2, Y3Cr2, Y4Cb4, Y5Cr4, …)
- 8-bit RGB888 or 8-bit YCrCb888 serial (1 color per clock input; 3 clocks per displayed pixel)
  - On an 8 wire interface
- 8-bit YCrCb 4:2:2 serial (1 color per clock input; 2 clocks per displayed pixel)
  - On an 8 wire interface

PDATA Bus – Parallel Interface Bit Mapping Modes shows the required PDATA(23:0) bus mapping for these six data transfer formats.

7.2.2.1 PDATA Bus – Parallel Interface Bit Mapping Modes

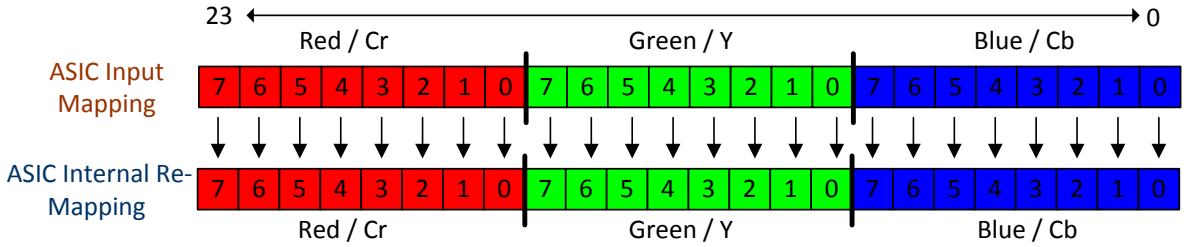

Figure 12. RGB-888 / YCrCb-888 I/O Mapping

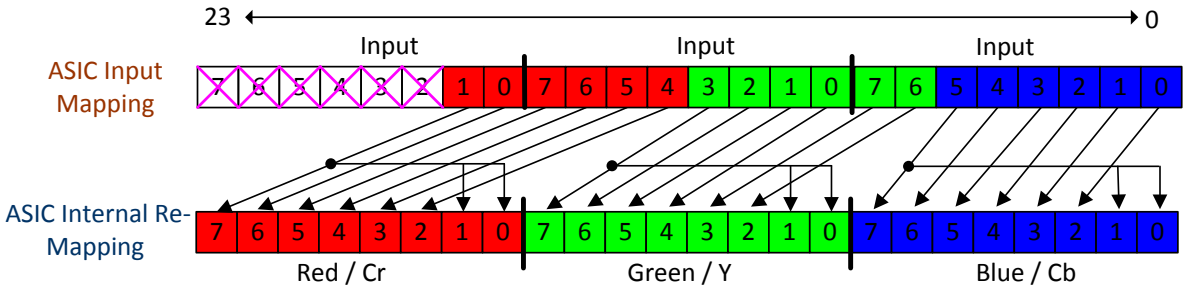

Figure 13. RGB-666 / YCrCb-666 I/O Mapping

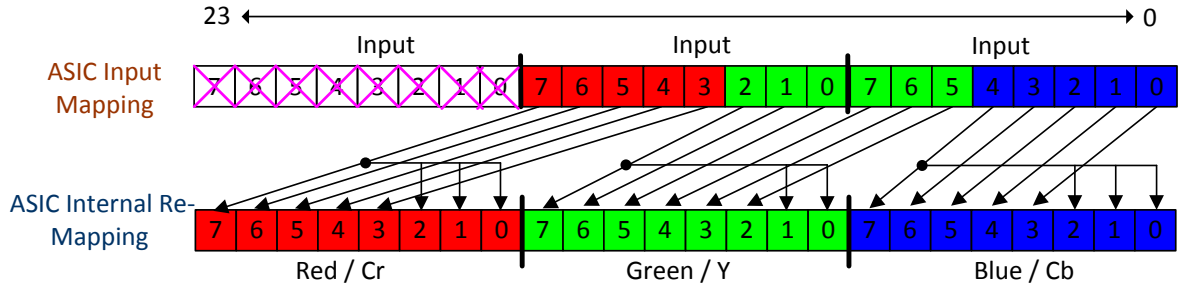

Figure 14. RGB-565 / YCrCb-565 I/O Mapping

Copyright © 2014–2016, Texas Instruments Incorporated

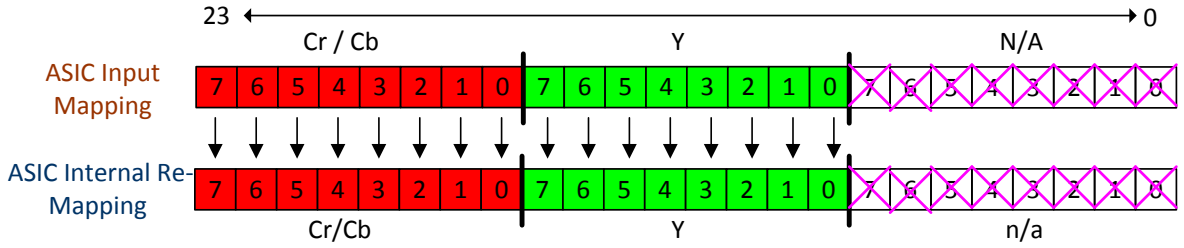

Figure 15. 16-Bit YCrCb-880 I/O Mapping

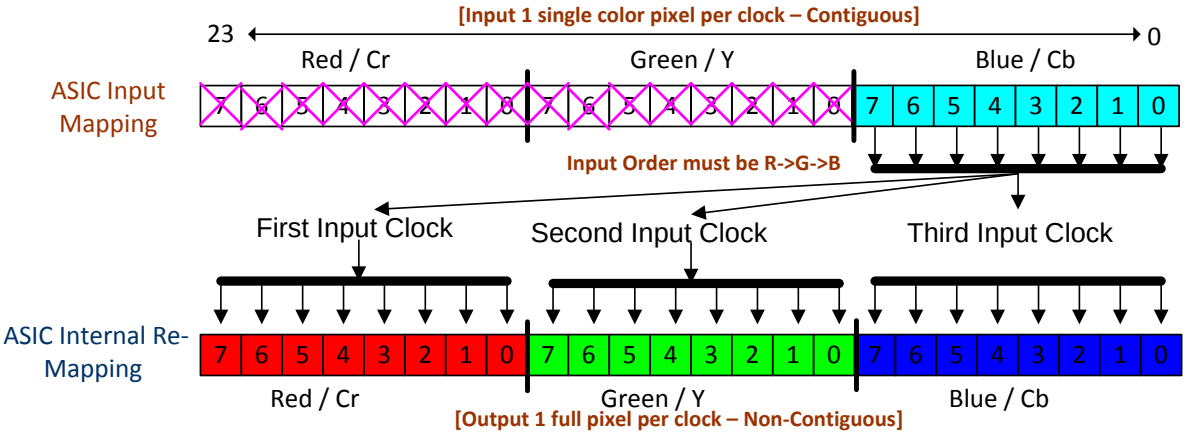

Figure 16. 8-Bit RGB-888 or YCrCb-888 I/O Mapping

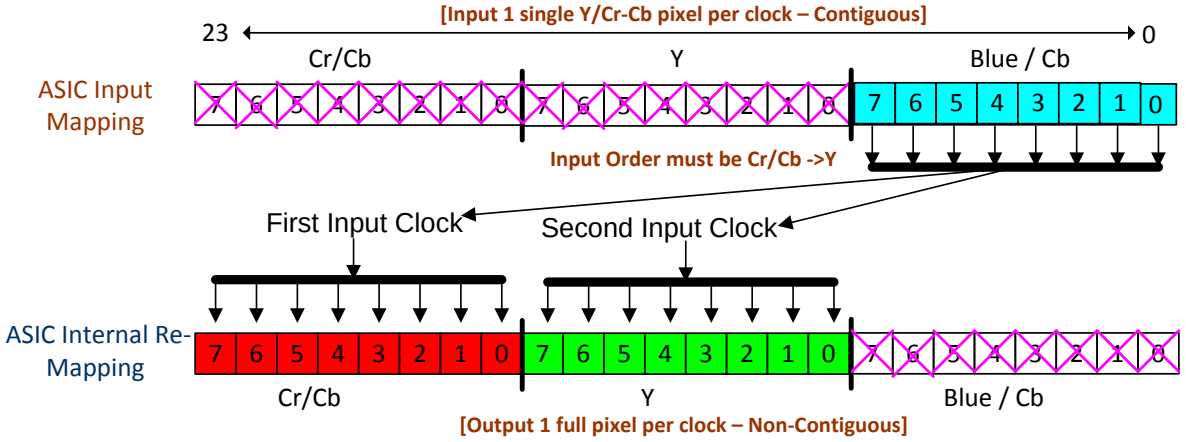

Figure 17. 8-Bit Serial YCrCb-422 I/O Mapping

7.2.3 DSI Interface - Supported Data Transfer Formats

- 24-bit RGB888 - each pixel using 3 bytes (DSI Data Type = 0x3E)
- 18-bit RGB666 - packed (DSI Data Type = 0x1E)
- 18-bit RGB666 - loosely packed into 3 bytes (DSI Data Type = 0x2E)
- 16-bit RGB565 - each pixel using 2 bytes (DSI Data Type = 0x0E)
- 16-bit 4:2:2 YCbCr - packed (DSI Data Type = 0x2C)

Copyright © 2014–2016, Texas Instruments Incorporated

8 Detailed Description

8.1 Overview

The DLPC343x is the display controller for the DLP3010 (.3 720) DMD. DLPC343x is part of the chipset comprising DLPC343x controller, DLP3010 (.3 720) DMD, and DLPA200x PMIC/LED driver. All three components of the chipset must be used in conjunction with each other for reliable operation of the DLP3010 (.3 720) DMD. The DLPC343x display controller provides interfaces and data/image processing functions that are optimized for small form factor and power-constrained display applications. Applications include projection within cell phones, camera, camcorders and tablets, pico projectors, wearable displays, and digital signage. Standalone projectors must include a separate front-end chip to interface to the outside world (for example, video decoder, HDMI receiver, triple ADC, or USB I/F chip).

8.2 Functional Block Diagram

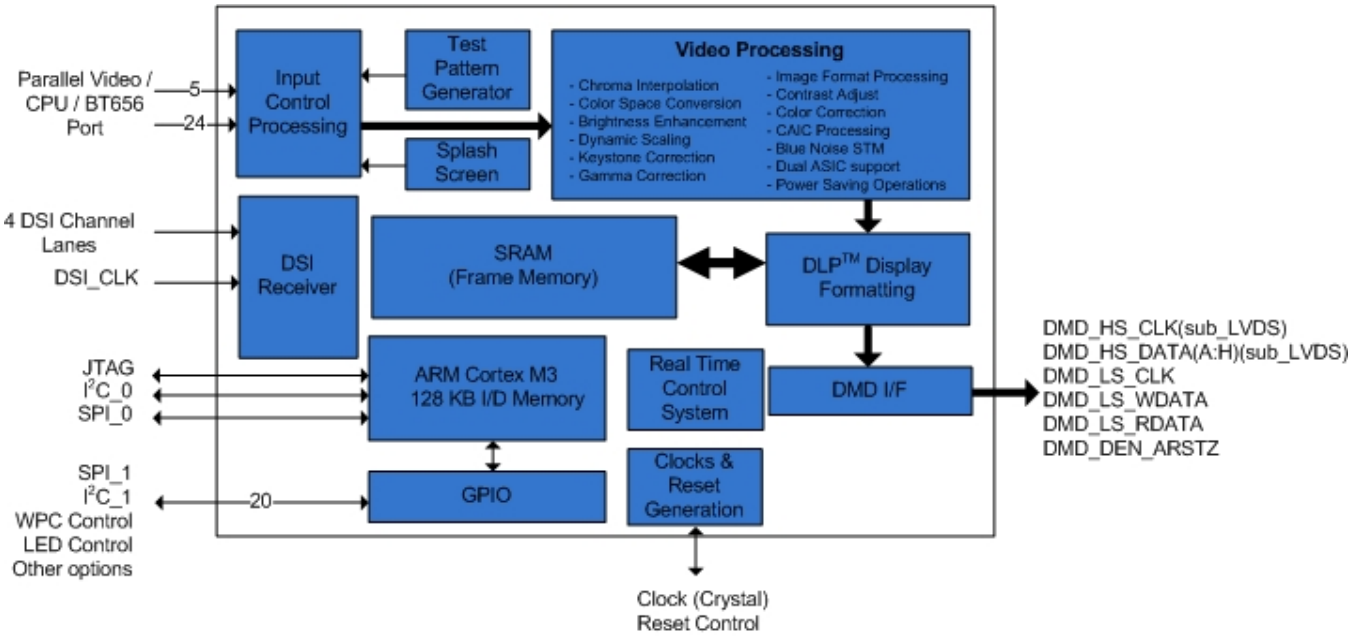

8.3 Feature Description

8.3.1 Interface Timing Requirements

This section defines the timing requirements for the external interfaces for the DLPC343x ASIC.

8.3.1.1 Parallel Interface

The parallel interface complies with standard graphics interface protocol, which includes a vertical sync signal (VSYNC_WE), horizontal sync signal (HSYNC_CS), optional data valid signal (DATAEN_CMD), a 24-bit data bus (PDATA), and a pixel clock (PCLK). The polarity of both syncs and the active edge of the clock are programmable. Figure 6 shows the relationship of these signals. The data valid signal (DATAEN_CMD) is optional in that the DLPC343x provides auto-framing parameters that can be programmed to define the data valid window based on pixel and line counting relative to the horizontal and vertical syncs.

In addition to these standard signals, an optional side-band signal (PDM_CVS_TE) is available, which allows periodic frame updates to be stopped without losing the displayed image. When PDM_CVS_TE is active, it acts as a data mask and does not allow the source image to be propagated to the display. A programmable PDM polarity parameter determines if it is active high or active low. This parameter defaults to make PDM_CVS_TE active high; if this function is not desired, then it should be tied to a logic low on the PCB. PDM_CVS_TE is restricted to change only during vertical blanking.

Copyright © 2014–2016, Texas Instruments Incorporated

Feature Description (continued)

NOTE

VSYNC_WE must remain active at all times (in lock-to-VSYNC mode) or the display sequencer will stop and cause the LEDs to be turned off.

8.3.2 Display Serial Interface DSI

The DPP343x input interface supports the industry standard DSI Type-3 LVDS video interface up to 4-lanes. DSI is a source synchronous, high speed, low power, low cost physical layer. The DSI-PHY unit is responsible for the reception of data in High speed (HS) or reception / transmission of data in Low Power (LP) mode for Unidirectional Data Lanes. Point-to-point lane interconnect can be used for either data or clock signal transmission. The high speed receiver is a differential line receiver while the low-power receiver is an un-terminated, single-ended receiver circuit Figure 18 shows a single lane module with PPI Interface.

For a given frame rate, the DSI High-Speed (HS) clock frequency must be fixed. If a different DSI clock rate is ever needed to support another frame rate, I2C command "Write DSI Parameters (BDh)" must be sent to tell the DLPC3430 the new DSI clock frequency.

- Compliant with DSI-MIPI specification for Display Serial Interface (V 1.02.00) (except for those items noted in the DSI Host Timing Requirements).
- Compliant with D-PHY standard MIPI Specification (V 1.0).
- MIPI DSI Type 3 architecture.
- Supports display resolutions from 320x200 to 1280x800.
- Supports video mode (command mode not supported).
- Commands sent over I2C (MIPI DCS commands sent over DSI not supported).
- Supports multiple packets per transmission.
- Supports trigger messages in the forward direction.
- Data lanes configurable from one to four channels.
- EOT (End of Transfer) command is supported and must be enabled.
- CRC and ECC (Error Correction Code) for header supported. CRC and ECC can be disabled.
- Checksum for long packets with error reporting (but no ECC).
- Supports one virtual channel for video mode.
- Supports Burst Mode.
- Supports Non-Burst w/ Sync Pulses and w/ Sync Event.
- BTA (Bus Turn-Around) mode not supported and must be disabled in the DSI host processor.
- DSI is available for the DLPC3433 only. DSI is not available for the DLPC3438.
- LP (Low Power) mode supported (during V blanking and sync but not between pixel lines).

Copyright © 2014–2016, Texas Instruments Incorporated

Feature Description (continued)

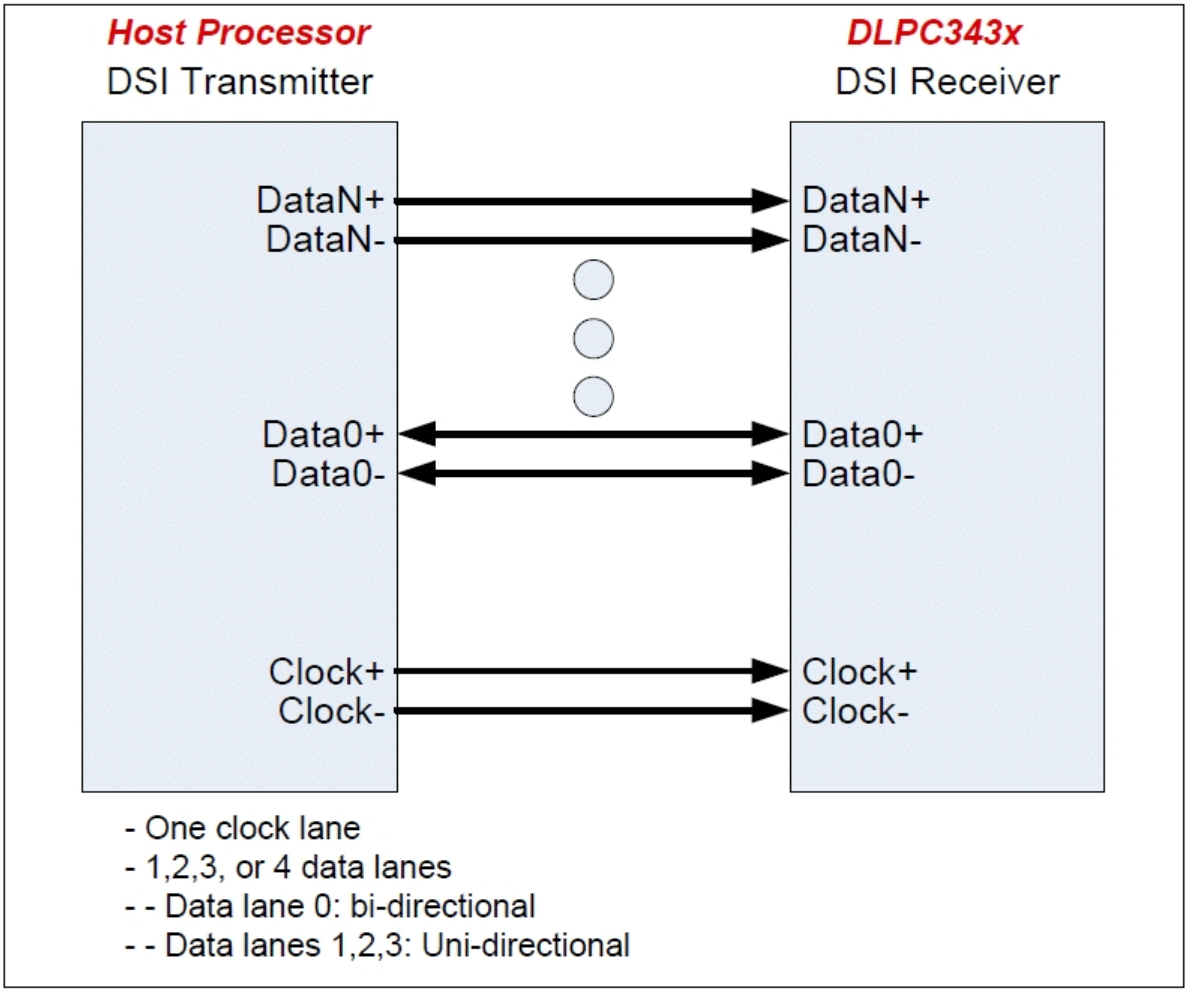

Figure 18. DSI - High Level View

The differential DSI Clock lane (DCLKN:DCLKP) must be in the LP11 (Idle) state upon the de-assertion of RESETZ (i.e. zero-to-one transition) and must remain in this state for a minimum of 100 µsec thereafter to ensure proper DSI initialization.

Differential Data lane '0' (DDON:DD0P) is required for DSI operation with the remaining 3 data lanes being optional / implementation specific as needed.

The state of GPIO (2:1) pins upon the de-assertion of RESETZ (i.e. a zero-to-one transition) will determine the number of DSI data lanes that will be enabled for both LP and HS bus operation.

8.3.3 Serial Flash Interface

DLPC343x uses an external SPI serial flash memory device for configuration support. The minimum required size is dependent on the desired minimum number of sequences, CMT tables, and splash options while the maximum supported is 16 Mb.

For access to flash, the DLPC343x uses a single SPI interface operating at a programmable frequency complying to industry standard SPI flash protocol. The programmable SPI frequency is defined to be equal to 180 MHz/N, where N is a programmable value between 5 to 127 providing a range from 36.0 to 1.41732 MHz. Note that this results in a relatively large frequency step size in the upper range (for example, 36 MHz, 30 MHz, 25.7 MHz, 22.5 MHz, and so forth) and thus this must be taken into account when choosing a flash device.

Copyright © 2014–2016, Texas Instruments Incorporated

Feature Description (continued)

The DLPC343x supports two independent SPI chip selects; however, the flash must be connected to SPI chip select zero (SPI0_CSZ0) because the boot routine is only executed from the device connected to chip select zero (SPI0_CSZ0). The boot routine uploads program code from flash to program memory, then transfers control to an auto-initialization routine within program memory. The DLPC343x asserts the HOST_IRQ output signal high while auto-initialization is in progress, then drives it low to signal its completion to the host processor. Only after auto-initialization is complete will the DLPC343x be ready to receive commands through I^2C.

The DLPC343x should support any flash device that is compatible with the modes of operation, features, and performance as defined in Table 5 and Table 6.

Table 5. SPI Flash Required Features or Modes of Operation

FEATURE	DLPC343x REQUIREMENT
SPI interface width	Single
SPI protocol	SPI mode 0
Fast READ addressing	Auto-incrementing
Programming mode	Page mode
Page size	256 B
Sector size	4 KB sector
Block size	any
Block protection bits	0 = Disabled
Status register bit(0)	Write in progress (WIP) {also called flash busy}
Status register bit(1)	Write enable latch (WEN)
Status register bits(6:2)	A value of 0 disables programming protection
Status register bit(7)	Status register write protect (SRWP)
Status register bits(15:8) (that is expansion status byte)	The DLPC343x only supports single-byte status register R/W command execution, and thus may not be compatible with flash devices that contain an expansion status byte. However, as long as expansion status byte is considered optional in the byte 3 position and any write protection control in this expansion status byte defaults to unprotected, then the device should be compatible with DLPC343x.

To support flash devices with program protection defaults of either enabled or disabled, the DLPC343x always assumes the device default is enabled and goes through the process of disabling protection as part of the boot-up process. This process consists of:

- A write enable (WREN) instruction executed to request write enable, followed by
- A read status register (RDSR) instruction is then executed (repeatedly as needed) to poll the write enable latch (WEL) bit
- After the write enable latch (WEL) bit is set, a write status register (WRSR) instruction is executed that writes 0 to all 8-bits (this disables all programming protection)

Prior to each program or erase instruction, the DLPC343x issues:

- A write enable (WREN) instruction to request write enable, followed by
- A read status register (RDSR) instruction (repeated as needed) to poll the write enable latch (WEL) bit
- After the write enable latch (WEL) bit is set, the program or erase instruction is executed
- Note the flash automatically clears the write enable status after each program and erase instruction

The specific instruction OpCode and timing compatibility requirements are listed in Table 8 and Table 7. Note however that DLPC343x does not read the flash's electronic signature ID and thus cannot automatically adapt protocol and clock rate based on the ID.

Copyright © 2014–2016, Texas Instruments Incorporated

Table 6. SPI Flash Instruction OpCode and Access Profile Compatibility Requirements

SPI FLASH COMMAND	FIRST BYTE (OPCODE)	SECOND BYTE	THIRD BYTE	FOURTH BYTE	FIFTH BYTE	SIXTH BYTE
Fast READ (1 Output)	0x0B	ADDRS(0)	ADDRS(1)	ADDRS(2)	dummy	DATA(0)(1)
Read status	0x05	n/a	n/a	STATUS(0)		
Write status	0x01	STATUS(0)	(2)			
Write enable	0x06					
Page program	0x02	ADDRS(0)	ADDRS(1)	ADDRS(2)	DATA(0)(1)	
Sector erase (4KB)	0x20	ADDRS(0)	ADDRS(1)	ADDRS(2)		
Chip erase	0xC7					

(1) Only the first data byte is show, data continues
(2) DLPC343x does not support access to a second/ expansion Write Status byte

The specific and timing compatibility requirements for a DLPC343x compatible flash are listed in Table 7 and Table 8.

Table 7. SPI Flash Key Timing Parameter Compatibility Requirements(1)(2)

SPI FLASH TIMING PARAMETER	SYMBOL	ALTERNATE SYMBOL	MIN	MAX	UNIT
Access frequency (all commands)	FR	f_C	≤1.42		MHz
Chip select high time (also called chip select deselect time)	t_{SHSL}	t_{CSH}	≤200		ns
Output hold time	t_{CLQX}	t_{HO}	≥0		ns
Clock low to output valid time	t_{CLQV}	t_V		≤ 11	ns
Data in set-up time	t_{DVCH}	t_{DSU}	≤5		ns
Data in hold time	t_{CHDX}	t_{DH}	≤5		ns

(1) The timing values are related to the specification of the flash device itself, not the DLPC343x.
(2) The DLPC343x does not drive the HOLD or WP (active low write protect) pins on the flash device, and thus these pins should be tied to a logic high on the PCB through an external pullup.

The DLPC343x supports 1.8-, 2.5-, or 3.3-V serial flash devices. To do so, VCC_FLSH must be supplied with the corresponding voltage. Table 8 contains a list of 1.8-, 2.5-, and 3.3-V compatible SPI serial flash devices supported by DLPC343x.

Table 8. DLPC343x Compatible SPI Flash Device Options(1) (2)

DVT(3)	DENSITY (Mb)	VENDOR	PART NUMBER	PACKAGE SIZE
1.8-V COMPATIBLE DEVICES				
Yes	4 Mb	Winbond	W25Q40BWUXIG	2 × 3 mm USON
Yes	4 Mb	Macronix	MX25U4033EBAI-12G	1.43 × 1.94 mm WLCSP
Yes	8 Mb	Macronix	MX25U8033EBAI-12G	1.68 × 1.99 mm WLCSP
2.5- OR 3.3-V COMPATIBLE DEVICES				
Yes	16 Mb	Winbond	W25Q16CLZPIG	5 × 6 mm WSON

8.3.4 Serial Flash Programming

Note that the flash can be programmed through the DLPC343x over I^2C or by driving the SPI pins of the flash directly while the DLPC343x I/O are tri-stated. SPI0_CLK, SPI0_DOUT, and SPI0_CSZ0 I/O can be tri-stated by holding RESETZ in a logic low state while power is applied to the DLPC343x. Note that SPI0_CSZ1 is not tri-stated by this same action.

(1) The flash supply voltage must match VCC_FLSH on the DLPC343x. Special attention needs to be paid when ordering devices to be sure the desired supply voltage is attained as multiple voltage options are often available under the same base part number.
(2) Beware when considering Numonyx (Micron) serial flash devices as they typically do not have the 4KB sector size needed to be DLPC343x compatible.
(3) All of these flash devices appear compatible with the DLPC343x, but only those marked with yes in the DVT column have been validated on the EVM343x reference design. Those marked with no can be used at the ODM's own risk.

Copyright © 2014–2016, Texas Instruments Incorporated

8.3.5 SPI Signal Routing

The DLPC343x is designed to support two SPI slave devices on the SPI0 interface, specifically, a serial flash and the DLPA200x. This requires routing associated SPI signals to two locations while attempting to operate up to 36 MHz. Take special care to ensure that reflections do not compromise signal integrity. To this end, the following recommendations are provided:

- The SPI0_CLK PCB signal trace from the DLPC343x source to each slave device should be split into separate routes as close to the DLPC343x as possible. In addition, the SPI0_CLK trace length to each device should be equal in total length.
- The SPI0_DOUT PCB signal trace from the DLPC343x source to each slave device should be split into separate routes as close to the DLPC343x as possible. In addition, the SPI0_DOUT trace length to each device should be equal in total length(use the same strategy as SPI0_CLK).
- The SPI0_DIN PCB signal trace from each slave device to the point where they intersect on their way back to the DLPC343x should be made equal in length and as short as possible. They should then share a common trace back to the DLPC343x.
- SPI0_CSZ0 and SPI0_CSZ1 need no special treatment because they are dedicated signals which drive only one device.

8.3.6 I^2C Interface Performance

Both DLPC343x I^2C interface ports support 100-kHz baud rate. By definition, I^2C transactions operate at the speed of the slowest device on the bus, thus there is no requirement to match the speed grade of all devices in the system.

8.3.7 Content-Adaptive Illumination Control

Content-adaptive illumination control (CAIC) is an image processing algorithm that takes advantage of the fact that in common real-world image content most pixels in the images are well below full scale for the for the R, G, and B digital channels being input to the DLPC343x. As a result of this the average picture level (APL) for the overall image is also well below full scale, and the system's dynamic range for the collective set of pixel values is not fully utilized. CAIC takes advantage of this headroom between the source image APL and the top of the available dynamic range of the display system.

CAIC evaluates images frame by frame and derives three unique digital gains, one for each of the R, G, and B color channels. During CAIC image processing, each gain is applied to all pixels in the associated color channel. CAIC derives each color channel's gain that is applied to all pixels in that channel so that the pixels as a group collectively shift upward and as close to full scale as possible. To prevent any image quality degradation, the gains are set at the point where just a few pixels in each color channel are clipped. Figure 19 and Figure 20 show an example of the application of CAIC for one color channel.

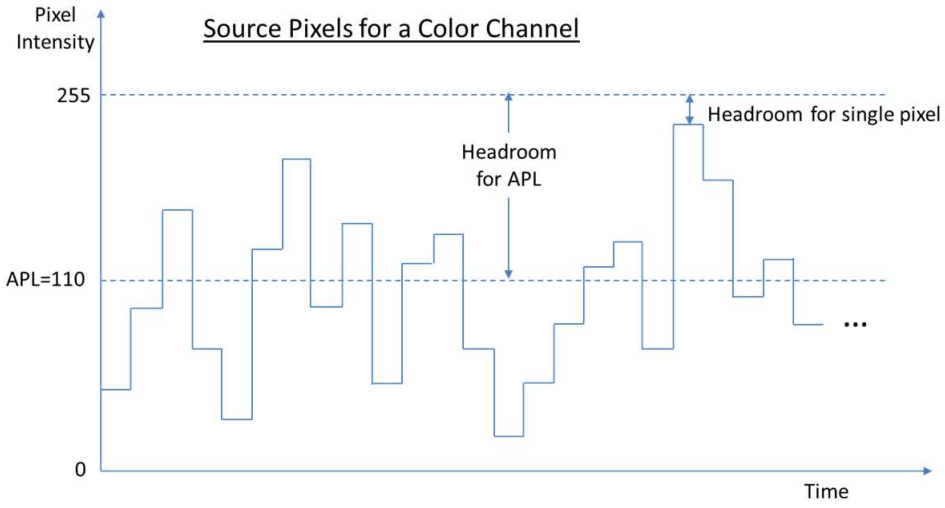

Figure 19. Input Pixels Example

Copyright © 2014–2016, Texas Instruments Incorporated

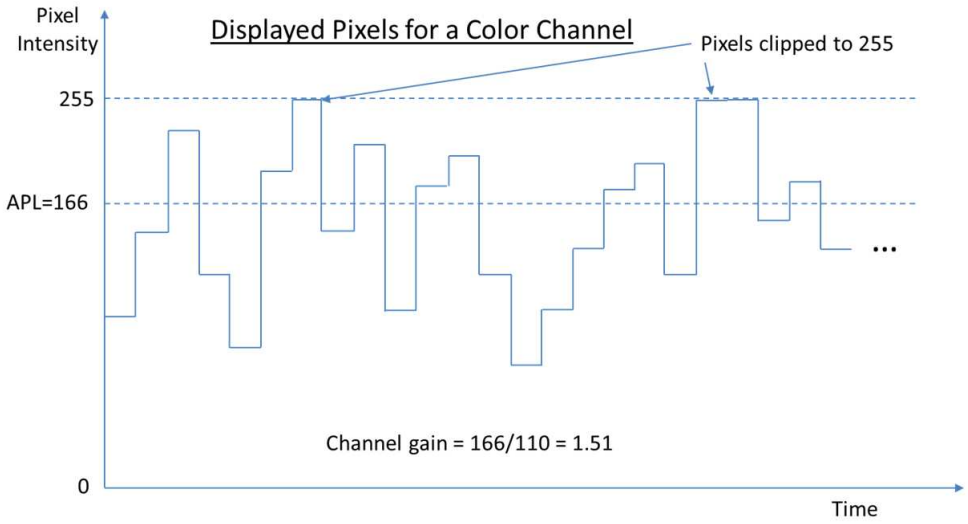

Figure 20. Displayed Pixels After CAIC Processing

Figure 20 shows the gain that is applied to a color processing channel inside the DLPC343x. CAIC will also adjust the power for the R, G, and B LED. For each color channel of an individual frame, CAIC will intelligently determine the optimal combination of digital gain and LED power. The decision regarding how much digital gain to apply to a color channel and how much to adjust the LED power for that color is heavily influenced by the software command settings sent to the DLPC343x for configuring CAIC.

As CAIC applies a digital gain to each color channel independently, and adjusts each LED's power independently, CAIC also makes sure that the resulting color balance in the final image matches the target color balance for the projector system. Thus, the effective displayed white point of images is held constant by CAIC from frame to frame.

Since the R, G, and B channels can be gained up by CAIC inside the DLPC343x, the LED power can be turned down for any color channel until the brightness of the color on the screen is unchanged. Thus, CAIC can achieve an overall LED power reduction while maintaining the same overall image brightness as if CAIC was not used. Figure 21 shows an example of LED power reduction by CAIC for an image where the R and B LEDs can be turned down in power.

CAIC can alternatively be used to increase the overall brightness of an image while holding the total power for all LEDs constant. In summary, when CAIC is enabled CAIC can operate in one of two distinct modes:

- Power Reduction Mode – holds overall image brightness constant while reducing LED power
- Enhanced Brightness Mode – holds overall LED power constant while enhancing image brightness

Copyright © 2014–2016, Texas Instruments Incorporated

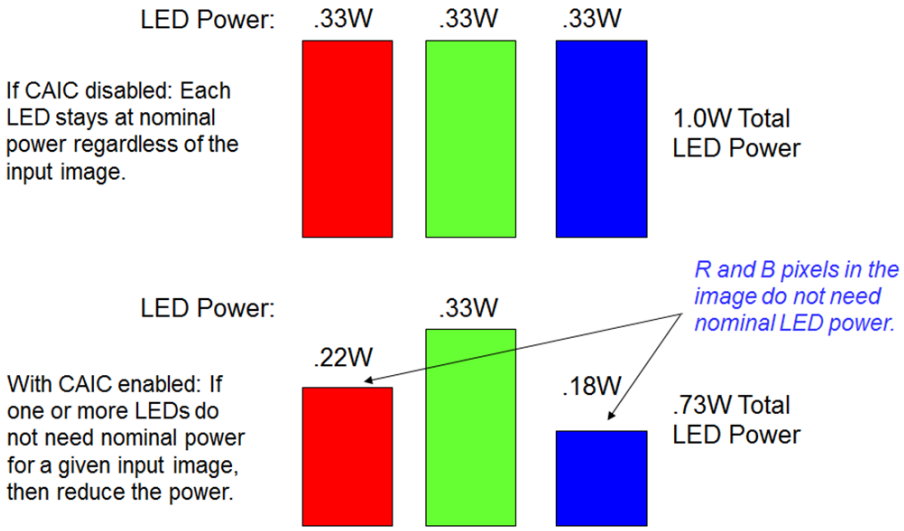

Figure 21. CAIC Power Reduction Mode (for Constant Brightness)

8.3.8 Local Area Brightness Boost

Local area brightness boost (LABB), is an image processing algorithm that adaptively gains up regions of an image that are dim relative to the average picture level. Some regions of the image will have significant gain applied, and some regions will have little or no gain applied. LABB evaluates images frame by frame and derives the local area gains to be used uniquely for each image. Since many images have a net overall boost in gain even if some parts of the image get no gain, the overall perceived brightness of the image is boosted.

Figure 22 shows a split screen example of the impact of the LABB algorithm for an image that includes dark areas.

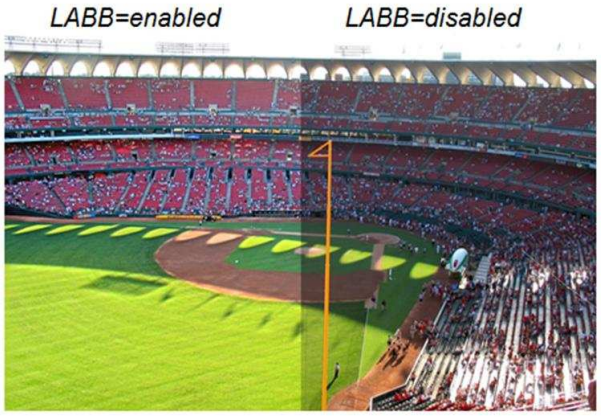

Figure 22. Boosting Brightness in Local Areas of an Image

LABB works best when the decision about the strength of gains used is determined by ambient light conditions. For this reason, there is an option to add an ambient light sensor which can be read by the DLPC343x during each frame. Based on the sensor readings, LABB will apply higher gains for bright rooms to help overcome any washing out of images. LABB will apply lower gains in dark rooms to prevent over-punching of images.

Copyright © 2014–2016, Texas Instruments Incorporated

8.3.9 3-D Glasses Operation

For supporting 3D glasses, the DLPC343x -based chip set outputs sync information to synchronize the Left eye/Right eye shuttering in the glasses with the displayed DMD image frames.

Two different types of glasses are often used to achieve synchronization. One relies on an IR transmitter on the system PCB to send an IR sync signal to an IR receiver in the glasses. In this case DLPC343x output signal GPIO_04 can be used to cause the IR transmitter to send an IR sync signal to the glasses. The timing for signal GPIO_04 is shown in Figure 11.

The second type of glasses relies on sync information that is encoded into the light being outputted from the projection lens. This is referred to as the DLP Link approach for 3D, and many 3D glasses from different suppliers have been built using this method. This demonstrates that the DLP Link method can work reliable. The advantage of the DLP Link approach is that it takes advantage of existing projector hardware to transmit the sync information to the glasses. This can save cost, size and power in the projector.

For generating the DLP Link sync information, one light pulse per DMD frame is outputted from the projection lens while the glasses have both shutters closed. To achieve this, the DLPC343x will tell the DLPA2000 or DLPA2005 when to turn on the illumination source (typically LEDs or lasers) so that an encoded light pulse is output once per DMD frame. Since the shutters in the glasses are both off when the DLP Link pulse is sent, the projector illumination source will also be off except for the when light is sent to create the DLP Link pulse. The timing for the light pulses for DLP Link 3D operation is shown in Figure 23 and Figure 24.

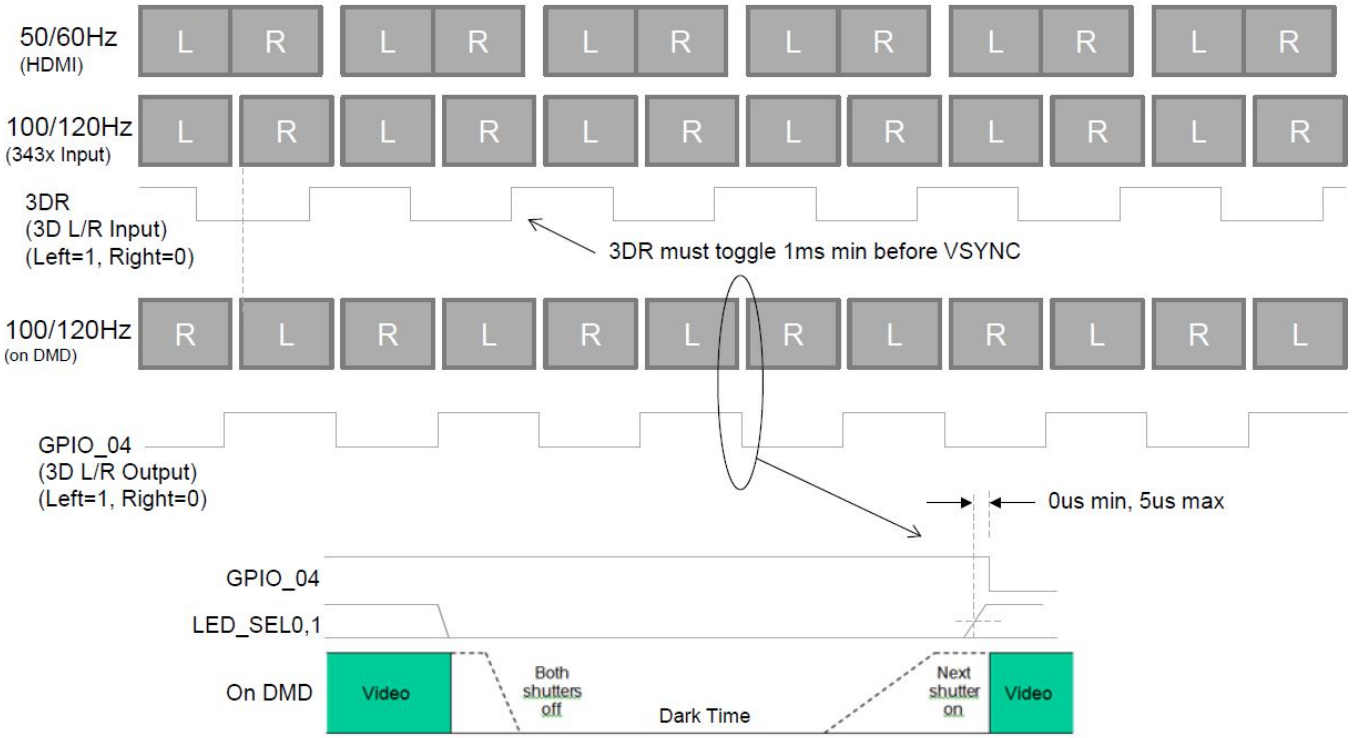

Figure 23. DLPC343x L/R Frame and Signal Timing

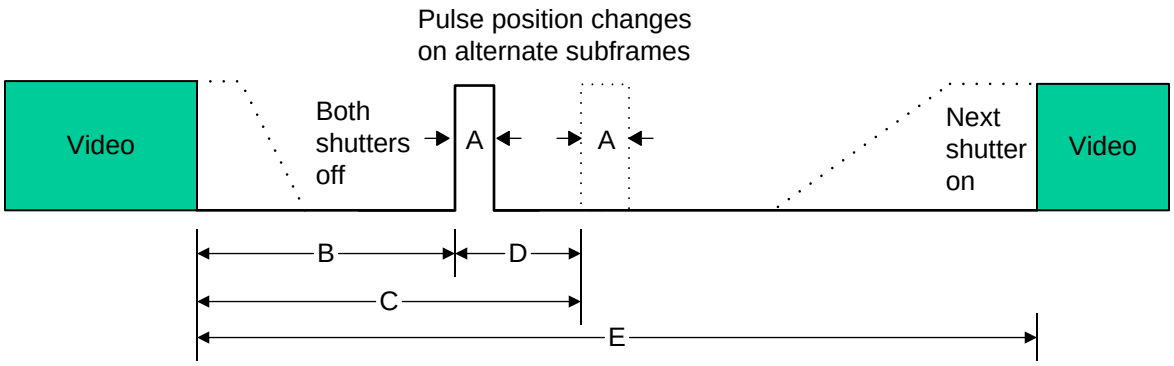

NOTE: The period between DLPLink pulses alternates between the subframe period =D and the subframe period -D, where D is the delta period.

Figure 24. 3D DLP Link Pulse Timing

8.3.10 DMD (Sub-LVDS) Interface

The DLPC343x ASIC DMD interface consists of a HS 1.8-V sub-LVDS output only interface with a maximum clock speed of 600-MHz DDR and a LS SDR (1.8-V LVCMOS) interface with a fixed clock speed of 120 MHz. The DLPC343x sub-LVDS interface supports a number of DMD display sizes, and as a function of resolution, not all output data lanes are needed as DMD display resolutions decrease in size. With internal software selection, the DLPC343x also supports a limited number of DMD interface swap configurations that can help board layout by remapping specific combinations of DMD interface lines to other DMD interface lines as needed. Table 9 shows the four options available for the DLP3010 (.3 720p) DMD specifically.

Table 9. DLP3010 (.3720p) DMD – ASIC to 8-Lane DMD Pin Mapping Options

DLPC343x ASIC 8 LANE DMD ROUTING OPTIONS		DMD PINS
OPTION 1 Swap Control = x0	OPTION 2 Swap Control = x2	
HS_WDATA_D_P HS_WDATA_D_N	HS_WDATA_E_P HS_WDATA_E_N	Input DATA_p_0 Input DATA_n_0
HS_WDATA_C_P HS_WDATA_C_N	HS_WDATA_F_P HS_WDATA_F_N	Input DATA_p_1 Input DATA_n_1
HS_WDATA_B_P HS_WDATA_B_N	HS_WDATA_G_P HS_WDATA_G_N	Input DATA_p_2 Input DATA_n_2
HS_WDATA_A_P HS_WDATA_A_N	HS_WDATA_H_P HS_WDATA_H_N	Input DATA_p_3 Input DATA_n_3
HS_WDATA_H_P HS_WDATA_H_N	HS_WDATA_A_P HS_WDATA_A_N	Input DATA_p_4 Input DATA_n_4
HS_WDATA_G_P HS_WDATA_G_N	HS_WDATA_B_P HS_WDATA_B_N	Input DATA_p_5 Input DATA_n_5
HS_WDATA_F_P HS_WDATA_F_N	HS_WDATA_C_P HS_WDATA_C_N	Input DATA_p_6 Input DATA_n_6
HS_WDATA_E_P HS_WDATA_E_N	HS_WDATA_D_P HS_WDATA_D_N	Input DATA_p_7 Input DATA_n_7

8.3.11 Calibration and Debug Support

The DLPC343x contains a test point output port, TSTPT_(7:0), which provides selected system calibration support as well as ASIC debug support. These test points are inputs while reset is applied and switch to outputs when reset is released. The state of these signals is sampled upon the release of system reset and the captured value configures the test mode until the next time reset is applied. Each test point includes an internal pulldown resistor, thus external pullups must be used to modify the default test configuration. The default configuration (x000) corresponds to the TSTPT_(7:0) outputs remaining tri-stated to reduce switching activity during normal operation. For maximum flexibility, an option to jumper to an external pullup is recommended for TSTPT_(2:0).

Copyright © 2014–2016, Texas Instruments Incorporated

Pullups on TSTPT_(6:3) are used to configure the ASIC for a specific mode or option. TI does not recommend adding pullups to TSTPT_(7:3) because this has adverse affects for normal operation. This external pullup is only sampled upon a 0-to-1 transition on the RESETZ input, thus changing their configuration after reset is released will not have any effect until the next time reset is asserted and released. Table 10 defines the test mode selection for one programmable scenario defined by TSTPT(2:0).

Table 10. Test Mode Selection Scenario Defined by TSTPT(2:0)(1)

TSTPT(2:0) CAPTURE VALUE	NO SWITCHING ACTIVITY	CLOCK DEBUG OUTPUT
	x000	x010
TSTPT(0)	HI-Z	60 MHz
TSTPT(1)	HI-Z	30 MHz
TSTPT(2)	HI-Z	0.7 to 22.5 MHz
TSTPT(3)	HI-Z	HIGH
TSTPT(4)	HI-Z	LOW
TSTPT(5)	HI-Z	HIGH
TSTPT(6)	HI-Z	HIGH
TSTPT(7)	HI-Z	7.5 MHz

(1) These are only the default output selections. Software can reprogram the selection at any time.

8.3.12 DMD Interface Considerations

The sub-LVDS HS interface waveform quality and timing on the DLPC343x ASIC is dependent on the total length of the interconnect system, the spacing between traces, the characteristic impedance, etch losses, and how well matched the lengths are across the interface. Thus, ensuring positive timing margin requires attention to many factors.

As an example, DMD interface system timing margin can be calculated as follows:

Setup Margin = (DLPC343x output setup) – (DMD input setup) – (PCB routing mismatch) – (PCB SI degradation) (1)

Hold-time Margin = (DLPC343x output hold) – (DMD input hold) – (PCB routing mismatch) – (PCB SI degradation)

where PCB SI degradation is signal integrity degradation due to PCB affects which includes such things as Simultaneously Switching Output (SSO) noise, cross-talk and Inter-symbol Interference (ISI) noise. (2)

DLPC343x I/O timing parameters as well as DMD I/O timing parameters can be found in their corresponding data sheets. Similarly, PCB routing mismatch can be budgeted and met through controlled PCB routing. However, PCB SI degradation is a more complicated adjustment.

In an attempt to minimize the signal integrity analysis that would otherwise be required, the following PCB design guidelines are provided as a reference of an interconnect system that will satisfy both waveform quality and timing requirements (accounting for both PCB routing mismatch and PCB SI degradation). Variation from these recommendations may also work, but should be confirmed with PCB signal integrity analysis or lab measurements.

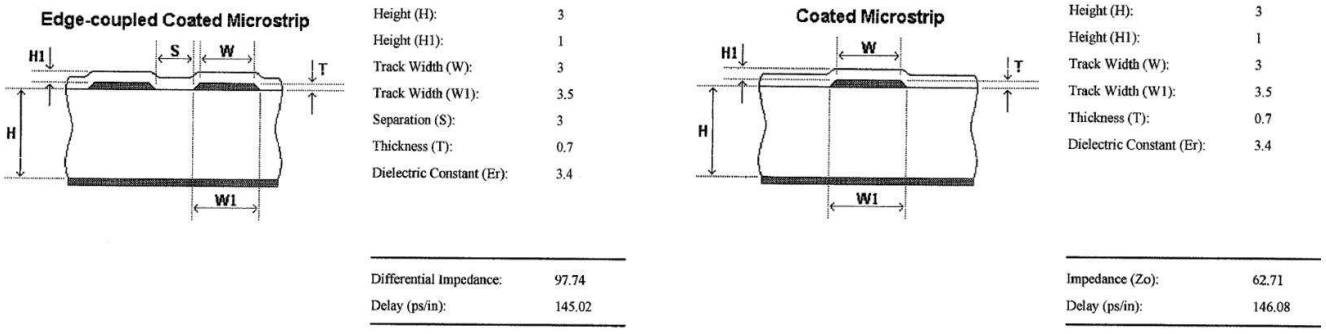

DMD_HS Differential Signals DMD_LS Signals

Figure 25. DMD Interface Board Stack-Up Details

8.4 Device Functional Modes

DLPC343x has two functional modes (ON/OFF) controlled by a single pin PROJ_ON:

- When pin PROJ_ON is set high, the projector automatically powers up and an image is projected from the DMD.
- When pin PROJ_ON is set low, the projector automatically powers down and only microwatts of power are consumed.

Copyright © 2014–2016, Texas Instruments Incorporated

9 Application and Implementation

NOTE

Information in the following applications sections is not part of the TI component specification, and TI does not warrant its accuracy or completeness. TI's customers are responsible for determining suitability of components for their purposes. Customers should validate and test their design implementation to confirm system functionality.

9.1 Application Information

The DLPC343x controller is required to be coupled with DLP3010 DMD to provide a reliable display solution for various data and video display applications. The DMDs are spatial light modulators which reflect incoming light from an illumination source to one of two directions, with the primary direction being into a projection or collection optic. Each application is derived primarily from the optical architecture of the system and the format of the data coming into the DLPC343x. Applications of interest include accessory projectors, projectors embedded in display devices like notebooks, laptops, tablets, and hot spots. Other applications include wearable (near-eye or head mounted) displays, interactive display, low latency gaming display, and digital signage.

9.1.1 DLPC343x System Design Consideration

System power regulation: It is acceptable for VDD_PLLD and VDD_PLLM to be derived from the same regulator as the core VDD, but to minimize the AC noise component they should be filtered as recommended in the *PCB Layout Guidelines for Internal ASIC PLL Power*.

9.2 Typical Application

A common application when using DLPC343x controller with DLP3010 DMD and DLPA200x/DLPA3000 PMIC/LED driver is for creating an accessory Pico projector for a smartphone, tablets, or any other display source. The DLPC343x in the accessory Pico projector typically receives images from a host processor or a multi media processor.

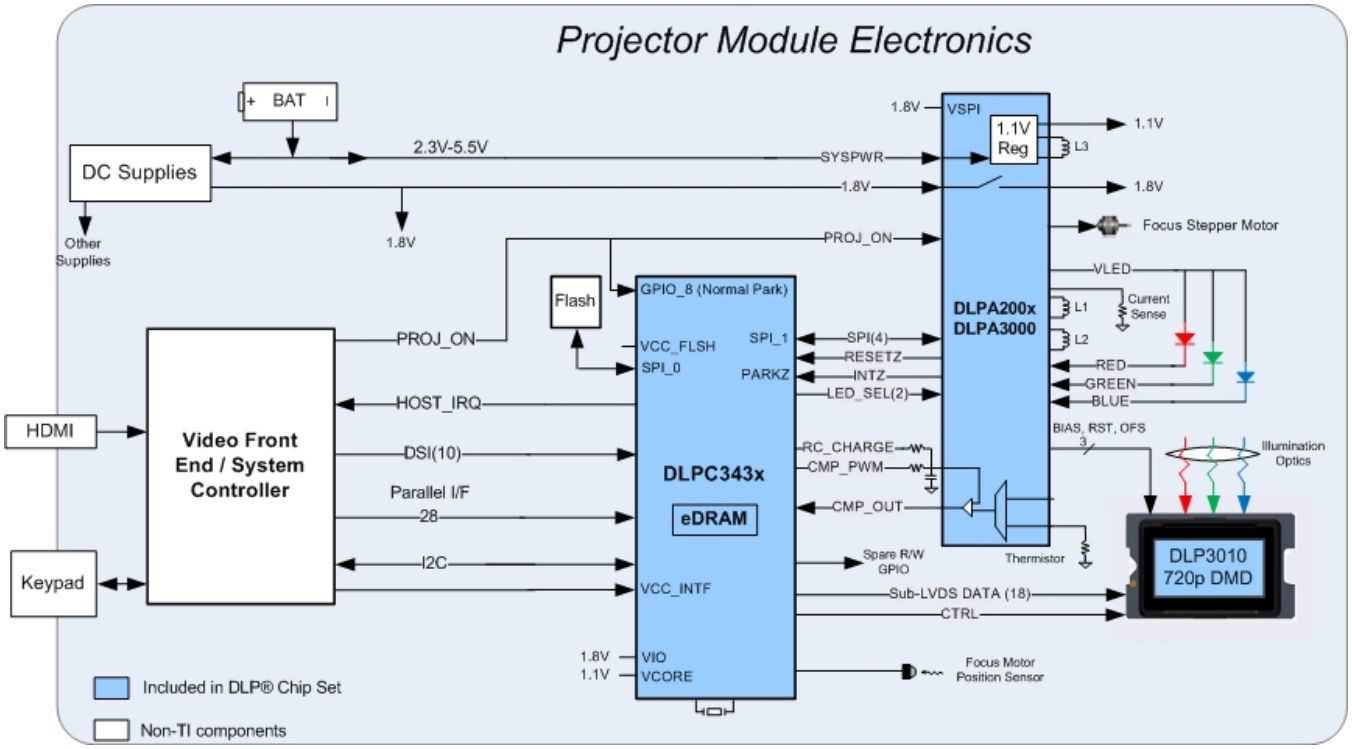

Typical Application (continued)

9.2.1 Design Requirements

A Pico projector is created by using a DLP chipset comprised of DLP3010 (.3 720p) DMD, DLPC343x controller and DLPA200x/DLPA3000 PMIC/LED driver. The DLPC343x does the digital image processing, the DLPA200x/DLPA3000 provides the needed analog functions for the projector, and DMD is the display device for producing the projected image.

In addition to the three DLP chips in the chipset, other chips may be needed. At a minimum a flash part is needed to store the software and firmware to control the DLPC343x.

The illumination light that is applied to the DMD is typically from red, green, and blue LEDs. These are often contained in three separate packages, but sometimes more than one color of LED die may be in the same package to reduce the overall size of the pico-projector.

For connecting the DLPC343x to the host processing for receiving images, parallel interface is used. I^2C should be connected to the host processor for sending commands to the DLPC343x.

The only power supplies needed external to the projector are the battery (SYSPWR) and a regulated 1.8-V supply.

The entire pico-projector can be turned on and off by using a single signal called PROJ_ON. When PROJ_ON is high, the projector turns on and begins displaying images. When PROJ_ON is set low, the projector turns off and draws just microamps of current on SYSPWR. When PROJ_ON is set low, the 1.8V supply can continue to be left at 1.8 V and used by other non-projector sections of the product. If PROJ_ON is low, the DLPA200x/DLPA3000 will not draw current on the 1.8-V supply.

9.2.2 Detailed Design Procedure

For connecting together the DLP3010 (.3 720p) DMD, DLPC343x controller and DLPA200x/DLPA3000 PMIC/LED Driver see the reference design schematic. When a circuit board layout is created from this schematic a very small circuit board is possible. An example small board layout is included in the reference design data base. Follow the layout guidelines to achieve a reliable projector.

The optical engine that has the LED packages and the DMD mounted to it is typically supplied by an optical OEM who specializes in designing optics for DLP projectors.

Copyright © 2014–2016, Texas Instruments Incorporated

Typical Application (continued)

9.2.3 Application Curve

As the LED currents that are driven time-sequentially through the red, green, and blue LEDs are increased, the brightness of the projector increases. This increase is somewhat non-linear, and the curve for typical white screen lumens changes with LED currents is shown in Figure 26 when using the DLPA2005. For the LED currents shown, it is assumed that the same current amplitude is applied to the red, green, and blue LEDs.

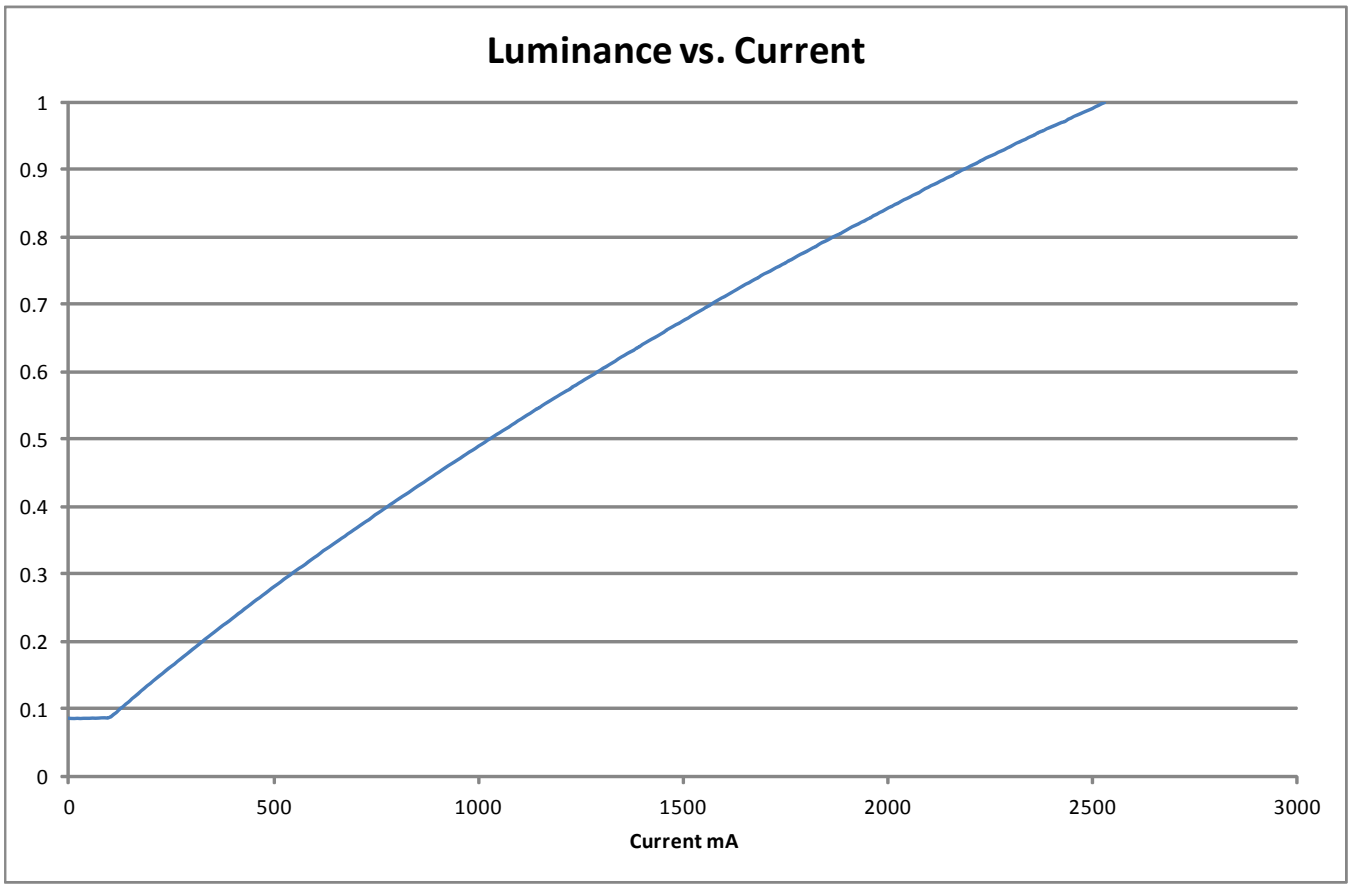

Figure 26. Luminance vs Current

10 Power Supply Recommendations

10.1 System Power-Up and Power-Down Sequence

Although the DLPC343x requires an array of power supply voltages, (for example, VDD, VDDLP12, VDD_PLLM/D, VCC18, VCC_FLSH, VCC_INTF), if VDDLP12 is tied to the 1.1-V VDD supply (which is assumed to be the typical configuration), then there are no restrictions regarding the relative order of power supply sequencing to avoid damaging the DLPC343x. (This is true for both power-up and power-down scenarios). Similarly, there is no minimum time between powering-up or powering-down the different supplies if VDDLP12 is tied to the 1.1-V VDD supply.

If however VDDLP12 is not tied to the VDD supply, then VDDLP12 must be powered-on after the VDD supply is powered-on, and powered-off before the VDD supply is powered-off. In addition, if VDDLP12 is not tied to VDD, then VDDLP12 and VDD supplies should be powered on or powered off within 100 ms of each other.

Although there is no risk of damaging the DLPC343x if the above power sequencing rules are followed, the following additional power sequencing recommendations must be considered to ensure proper system operation.

- To ensure that DLPC343x output signal states behave as expected, all DLPC343x I/O supplies should remain applied while VDD core power is applied. If VDD core power is removed while the I/O supply (VCC_INTF) is applied, then the output signal state associated with the inactive I/O supply will go to a high impedance state.
- Additional power sequencing rules may exist for devices that share the supplies with the DLPC343x, and thus these devices may force additional system power sequencing requirements.

Note that when VDD core power is applied, but I/O power is not applied, additional leakage current may be drawn. This added leakage does not affect normal DLPC343x operation or reliability.

Figure 27 and Figure 28 show the DLPC343x power-up and power-down sequence for both the normal PARK and fast PARK operations of the DLPC343x ASIC.

Copyright © 2014–2016, Texas Instruments Incorporated

System Power-Up and Power-Down Sequence (continued)

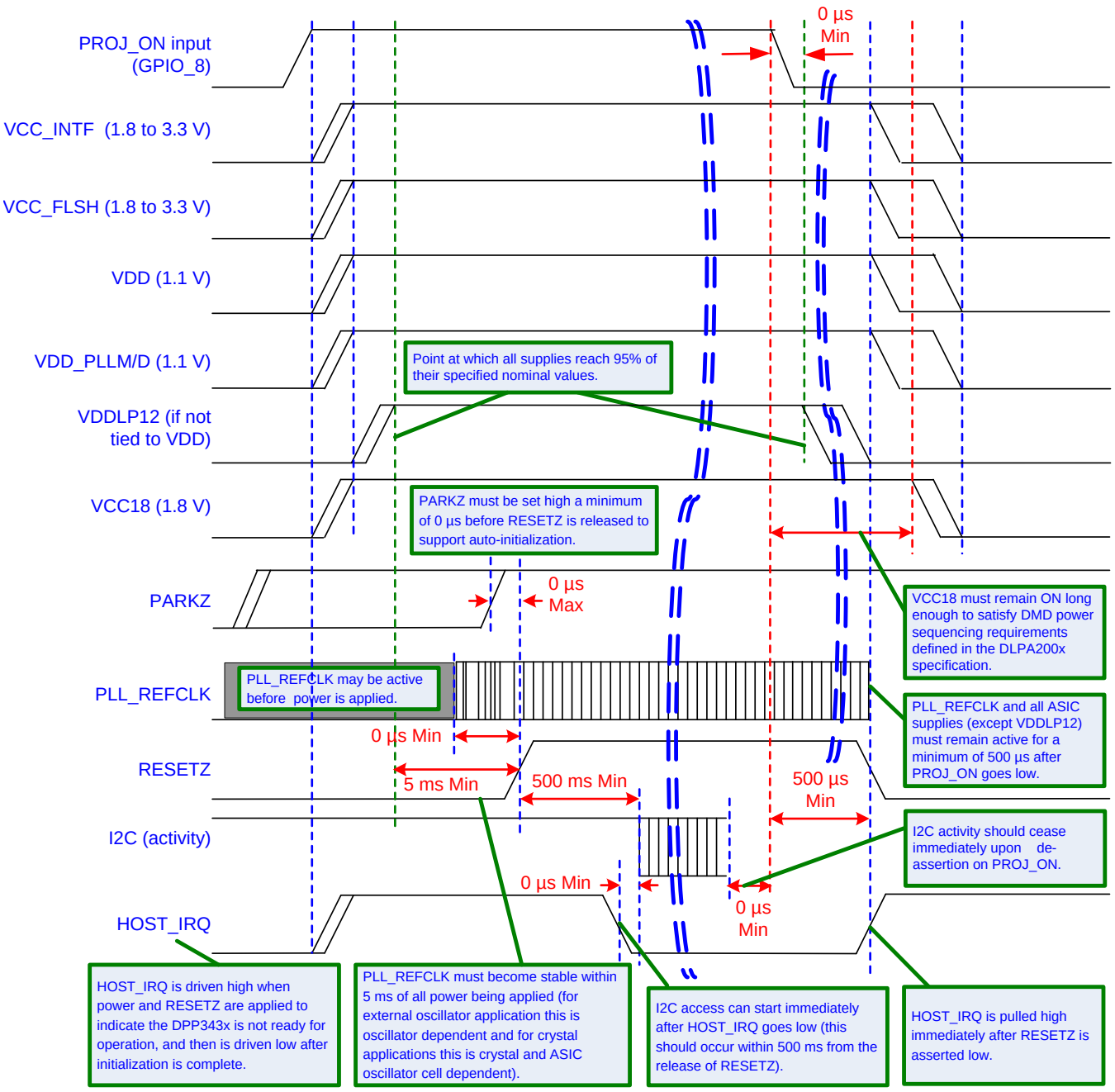

Figure 27. DLPC343x Power-Up / PROJ_ON = 0 Initiated Normal PARK and Power-Down

System Power-Up and Power-Down Sequence (continued)

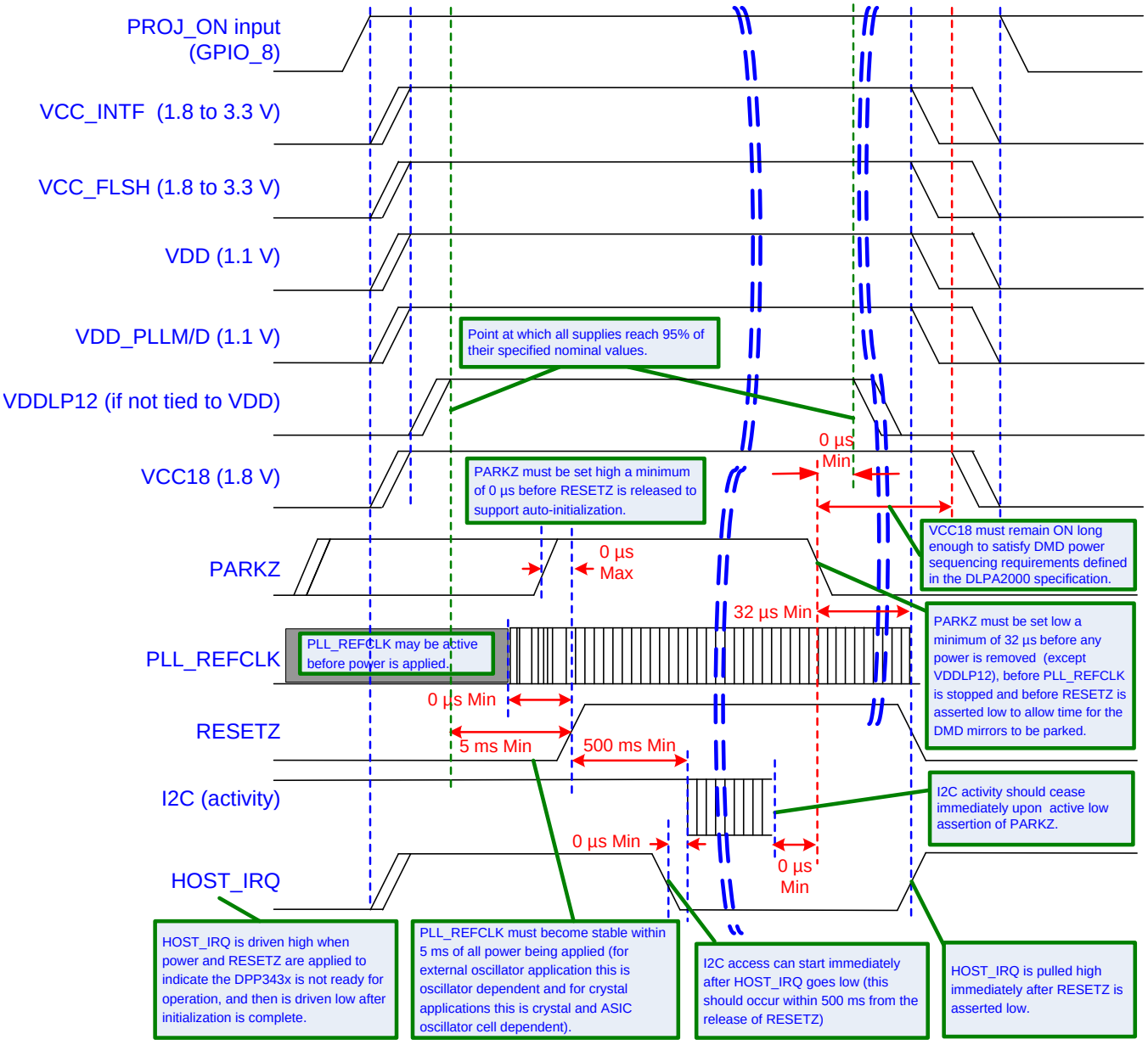

Figure 28. DLPC343x Power-Up / PARKZ = 0 Initiated Fast PARK and Power-Down

10.2 DLPC343x Power-Up Initialization Sequence

It is assumed that an external power monitor will hold the DLPC343x in system reset during power-up. It must do this by driving RESETZ to a logic low state. It should continue to assert system reset until all ASIC voltages have reached minimum specified voltage levels, PARKZ is asserted high, and input clocks are stable. During this time, most ASIC outputs will be driven to an inactive state and all bidirectional signals will be configured as inputs to avoid contention. ASIC outputs that are not driven to an inactive state are tri-stated. These include LED_SEL_0, LED_SEL_1, SPICLK, SPIDOUT, and SPICSZ0 (see RESETZ pin description for full signal descriptions in *Pin Configuration and Functions*. After power is stable and the PLL_REFCLK_I clock input to the DLPC343x is stable, then RESETZ should be deactivated (set to a logic high). The DLPC343x then performs a power-up initialization routine that first locks its PLL followed by loading self configuration data from the external flash.

Copyright © 2014–2016, Texas Instruments Incorporated

DLPC343x Power-Up Initialization Sequence (continued)

Upon release of RESETZ all DLPC343x I/Os will become active. Immediately following the release of RESETZ, the HOST_IRQ signal will be driven high to indicate that the auto initialization routine is in progress. However, since a pullup resistor is connected to signal HOST_IRQ, this signal will have already gone high before the DLPC343x actively drives it high. Upon completion of the auto-initialization routine, the DLPC343x will drive HOST_IRQ low to indicate the initialization done state of the DLPC343x has been reached.

Note that the host processor can start sending I^2C commands after HOST_IRQ goes low.

10.3 DMD Fast PARK Control (PARKZ)

The PARKZ signal is defined to be an early warning signal that should alert the ASIC 40 µs before DC supply voltages have dropped below specifications in fast PARK operation. This allows the ASIC time to park the DMD, ensuring the integrity of future operation. Note that the reference clock should continue to run and RESETZ should remain deactivated for at least 40 µs after PARKZ has been deactivated (set to a logic low) to allow the park operation to complete.

10.4 Hot Plug Usage

The DLPC343x provides fail-safe I/O on all host interface signals (signals powered by VCC_INTF). This allows these inputs to be driven high even when no I/O power is applied. Under this condition, the DLPC343x will not load the input signal nor draw excessive current that could degrade ASIC reliability. For example, the I^2C bus from the host to other components would not be affected by powering off VCC_INTF to the DLPC343x. TI recommends weak pullups or pulldowns on signals feeding back to the host to avoid floating inputs.

If the I/O supply (VCC_INTF) is powered off, but the core supply (VDD) is powered on, then the corresponding input buffer may experience added leakage current, but this does not damage the DLPC343x.

10.5 Maximum Signal Transition Time

Unless otherwise noted, 10 ns is the maximum recommended 20 to 80% rise or fall time to avoid input buffer oscillation. This applies to all DLPC343x input signals. However, the PARKZ input signal includes an additional small digital filter that ignores any input buffer transitions caused by a slower rise or fall time for up to 150 ns.

Copyright © 2014–2016, Texas Instruments Incorporated

11 Layout

11.1 Layout Guidelines

11.1.1 PCB Layout Guidelines for Internal ASIC PLL Power

The following guidelines are recommended to achieve desired ASIC performance relative to the internal PLL. The DLPC343x contains 2 internal PLLs which have dedicated analog supplies (VDD_PLLM , VSS_PLLM, VDD_PLLD, VSS_PLLD). As a minimum, VDD_PLLx power and VSS_PLLx ground pins should be isolated using a simple passive filter consisting of two series Ferrites and two shunt capacitors (to widen the spectrum of noise absorption). It's recommended that one capacitor be a 0.1uf capacitor and the other be a 0.01uf capacitor. All four components should be placed as close to the ASIC as possible but it's especially important to keep the leads of the high frequency capacitors as short as possible. Note that both capacitors should be connected across VDD_PLLM and VSS_PLLM / VDD_PLLD and VSS_PLLD respectfully on the ASIC side of the Ferrites.

For the ferrite beads used, their respective characteristics should be as follows:

- DC resistance less than 0.40 Ω
- Impedance at 10 MHz equal to or greater than 180 Ω
- Impedance at 100 MHz equal to or greater than 600 Ω

The PCB layout is critical to PLL performance. It is vital that the quiet ground and power are treated like analog signals. Therefore, VDD_PLLM and VDD_PLLD must be a single trace from the DLPC343x to both capacitors and then through the series ferrites to the power source. The power and ground traces should be as short as possible, parallel to each other, and as close as possible to each other.

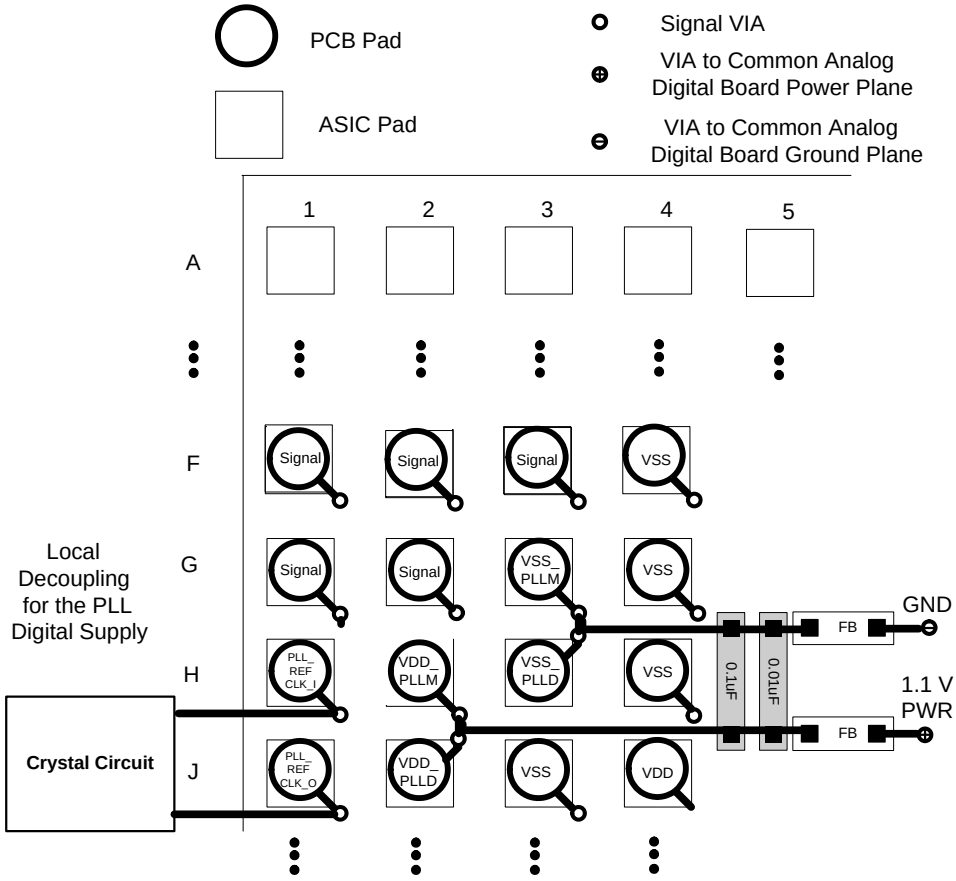

Figure 29. PLL Filter Layout

Copyright © 2014–2016, Texas Instruments Incorporated

Layout Guidelines (continued)

11.1.2 DLPC343x Reference Clock

The DLPC343x requires an external reference clock to feed its internal PLL. A crystal or oscillator can supply this reference. For flexibility, the DLPC343x accepts either of two reference clock frequencies (see Table 12), but both must have a maximum frequency variation of ±200 ppm (including aging, temperature, and trim component variation). When a crystal is used, several discrete components are also required as shown in Figure 30.

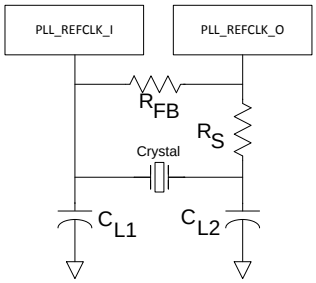

A. CL = Crystal load capacitance (farads)

B. CL1 = 2 × (CL – Cstray_pll_refclk_i)

C. CL2 = 2 × (CL – Cstray_pll_refclk_o)

D. Where: Cstray_pll_refclk_i = Sum of package and PCB stray capacitance at the crystal pin associated with the ASIC pin pll_refclk_i. Cstray_pll_refclk_o = Sum of package and PCB stray capacitance at the crystal pin associated with the ASIC pin pll_refclk_o.

Figure 30.

11.1.2.1 Recommended Crystal Oscillator Configuration

Table 11. Crystal Port Characteristics

PARAMETER	NOM	UNIT
PLL_REFCLK_I TO GND capacitance	1.5	pF
PLL_REFCLK_O TO GND capacitance	1.5	pF

Table 12. Recommended Crystal Configuration(1)(2)

PARAMETER	RECOMMENDED	UNIT
Crystal circuit configuration	Parallel resonant	
Crystal type	Fundamental (first harmonic)	
Crystal nominal frequency	24 or 16	MHz
Crystal frequency tolerance (including accuracy, temperature, aging and trim sensitivity)	±200	PPM
Maximum startup time	1.0	ms
Crystal equivalent series resistance (ESR)	120 max	Ω
Crystal load	6	pF
RS drive resistor (nominal)	100	Ω
RFB feedback resistor (nominal)	1Meg	Ω
CL1 external crystal load capacitor	See equation in Figure 30 notes	pF
CL2 external crystal load capacitor	See equation in Figure 30 notes	pF
PCB layout	A ground isolation ring around the crystal is recommended	

(1) Temperature range of –30°C to +85°C
(2) The crystal bias is determined by the ASIC's VCC_INTF voltage rail, which is variable (not the VCC18 rail).

Copyright © 2014–2016, Texas Instruments Incorporated

If an external oscillator is used, then the oscillator output must drive the PLL_REFCLK_I pin on the DLPC343x ASIC and the PLL_REFCLK_O pins should be left unconnected.

Table 13. DLPC343x Recommended Crystal Parts(1)(2)(3)

PASSED DVT	MANUFACTURER	PART NUMBER	SPEED	TEMPERATURE AND AGING	ESR	LOAD CAPACITANCE
Yes	KDS	DSX211G-24.000M-8pF-50-50	24 MHz	±50 ppm	120-Ω max	8 pF
Yes	Murata	XRCGB24M000F0L11R0	24 MHz	±100 ppm	120-Ω max	6 pF
Yes	NDK	NX2016SA 24M EXS00A-CS05733	24 MHz	±145 ppm	120-Ω max	6 pF

(1) These crystal devices appear compatible with the DLPC343x, but only those marked with yes in the DVT column have been validated.
(2) Crystal package sizes: 2.0 × 1.6 mm for both crystals.
(3) Operating temperature range: –30°C to +85°C for all crystals.

11.1.2.1.1 PCB Layout Guidelines for DSI Interface

The DSI LVDS interface should follow the following PCB layout guidelines to ensure proper DSI operation

- The differential clock and data lines should be routed to match 50 Ohm single-ended and 100 Ohm differential impedance.
- The length of dp and dn should be matched, or if that is not possible, dp should be slightly longer than dn (delta delay not to exceed 8-10ps), especially for the clock-lane. This is to prevent propagation on the clock lane during HS-> LP transition.
- No thru-hole VIAS permitted on High Speed Traces.
- Route preferably on top or bottom layers
- Must have a ground reference plane.
- Avoid power plane transitions in upper or lower layers.
- Avoid using larger than 0402 SMS resistors if required. If 0402 resistors are used in the traces then the layer below must have a void.
- No thru-hole SMA connectors.
- Minimize trace length as possible.
- Perform signal integrity simulations to ensure board performance.

11.1.3 General PCB Recommendations

TI recommends 1-oz. copper planes in the PCB design to achieve needed thermal connectivity.

11.1.4 General Handling Guidelines for Unused CMOS-Type Pins

To avoid potentially damaging current caused by floating CMOS input-only pins, TI recommends that unused ASIC input pins be tied through a pullup resistor to its associated power supply or a pulldown to ground. For ASIC inputs with an internal pullup or pulldown resistors, it is unnecessary to add an external pullup or pulldown unless specifically recommended. Note that internal pullup and pulldown resistors are weak and should not be expected to drive the external line. The DLPC343x implements very few internal resistors and these are noted in the pin list. When external pullup or pulldown resistors are needed for pins that have built-in weak pullups or pulldowns, use the value 8 kΩ (max).

Unused output-only pins should never be tied directly to power or ground, but can be left open.

When possible, TI recommends that unused bidirectional I/O pins be configured to their output state such that the pin can be left open. If this control is not available and the pins may become an input, then they should be pulled-up (or pulled-down) using an appropriate, dedicated resistor.

Copyright © 2014–2016, Texas Instruments Incorporated

11.1.5 Maximum Pin-to-Pin, PCB Interconnects Etch Lengths

Table 14. Max Pin-to-Pin PCB Interconnect Recommendations(1)(2)

DMD BUS SIGNAL	SIGNAL INTERCONNECT TOPOLOGY		UNIT
	SINGLE BOARD SIGNAL ROUTING LENGTH	MULTI-BOARD SIGNAL ROUTING LENGTH	
DMD_HS_CLK_P DMD_HS_CLK_N	6.0 152.4	See (3)	inch (mm)
DMD_HS_WDATA_A_P DMD_HS_WDATA_A_N	6.0 152.4	See (3)	inch (mm)
DMD_HS_WDATA_B_P DMD_HS_WDATA_B_N			
DMD_HS_WDATA_C_P DMD_HS_WDATA_C_N			
DMD_HS_WDATA_D_P DMD_HS_WDATA_D_N			
DMD_HS_WDATA_E_P DMD_HS_WDATA_E_N			
DMD_HS_WDATA_F_P DMD_HS_WDATA_F_N			
DMD_HS_WDATA_G_P DMD_HS_WDATA_G_N			
DMD_HS_WDATA_H_P DMD_HS_WDATA_H_N			
DMD_LS_CLK	6.5 165.1	See (3)	inch (mm)
DMD_LS_WDATA	6.5 165.1	See (3)	inch (mm)
DMD_LS_RDATA	6.5 165.1	See (3)	inch (mm)
DMD_DEN_ARSTZ	7.0 177.8	See (3)	inch (mm)

(1) Max signal routing length includes escape routing.
(2) Multi-board DMD routing length is more restricted due to the impact of the connector.
(3) Due to board variations, these are impossible to define. Any board designs should SPICE simulate with the ASIC IBIS models to ensure single routing lengths do not exceed requirements.

Copyright © 2014–2016, Texas Instruments Incorporated

Table 15. High Speed PCB Signal Routing Matching Requirements (1)(2)(3)(4)

SIGNAL GROUP LENGTH MATCHING				
INTERFACE	**SIGNAL GROUP**	**REFERENCE SIGNAL**	**MAX MISMATCH (5)**	**UNIT**
DMD	DMD_HS_WDATA_A_P DMD_HS_WDATA_A_N	DMD_HS_CLK_P DMD_HS_CLK_N	±1.0 (±25.4)	inch (mm)
	DMD_HS_WDATA_B_P DMD_HS_WDATA_B_N			
	DMD_HS_WDATA_C_P DMD_HS_WDATA_C_N			
	DMD_HS_WDATA_D_P DMD_HS_WDATA_D_N			
	DMD_HS_WDATA_E_P DMD_HS_WDATA_E_N			
	DMD_HS_WDATA_F_P DMD_HS_WDATA_F_N			
	DMD_HS_WDATA_G_P DMD_HS_WDATA_G_N			
	DMD_HS_WDATA_H_P DMD_HS_WDATA_H_N			
DMD	DMD_LS_WDATA DMD_LS_RDATA	DMD_LS_CLK	±0.2 (±5.08)	inch (mm)
DMD	DMD_DEN_ARSTZ	N/A	N/A	inch (mm)

(1) These values apply to PCB routing only. They do not include any internal package routing mismatch associated with the DLPC343x, the DMD.
(2) DMD HS data lines are differential, thus these specifications are pair-to-pair.
(3) Training is applied to DMD HS data lines, so defined matching requirements are slightly relaxed.
(4) DMD LS signals are single ended.
(5) Mismatch variance applies to high-speed data pairs. For all high-speed data pairs, the maximum mismatch between pairs should be 1 mm or less.

11.1.6 Number of Layer Changes

- Single-ended signals: Minimize the number of layer changes.
- Differential signals: Individual differential pairs can be routed on different layers, but the signals of a given pair should not change layers.

11.1.7 Stubs

- Stubs should be avoided.

11.1.8 Terminations

- No external termination resistors are required on DMD_HS differential signals.
- The DMD_LS_CLK and DMD_LS_WDATA signal paths should include a 43-Ω series termination resistor located as close as possible to the corresponding ASIC pins.
- The DMD_LS_RDATA signal path should include a 43-Ω series termination resistor located as close as possible to the corresponding DMD pin.
- DMD_DEN_ARSTZ does not require a series resistor.

11.1.9 Routing Vias

- The number of vias on DMD_HS signals should be minimized and should not exceed two.
- Any and all vias on DMD_HS signals should be located as close to the ASIC as possible.
- The number of vias on the DMD_LS_CLK and DMD_LS_WDATA signals should be minimized and not exceed two.
- Any and all vias on the DMD_LS_CLK and DMD_LS_WDATA signals should be located as close to the ASIC as possible.

Copyright © 2014–2016, Texas Instruments Incorporated

11.2 Layout Example

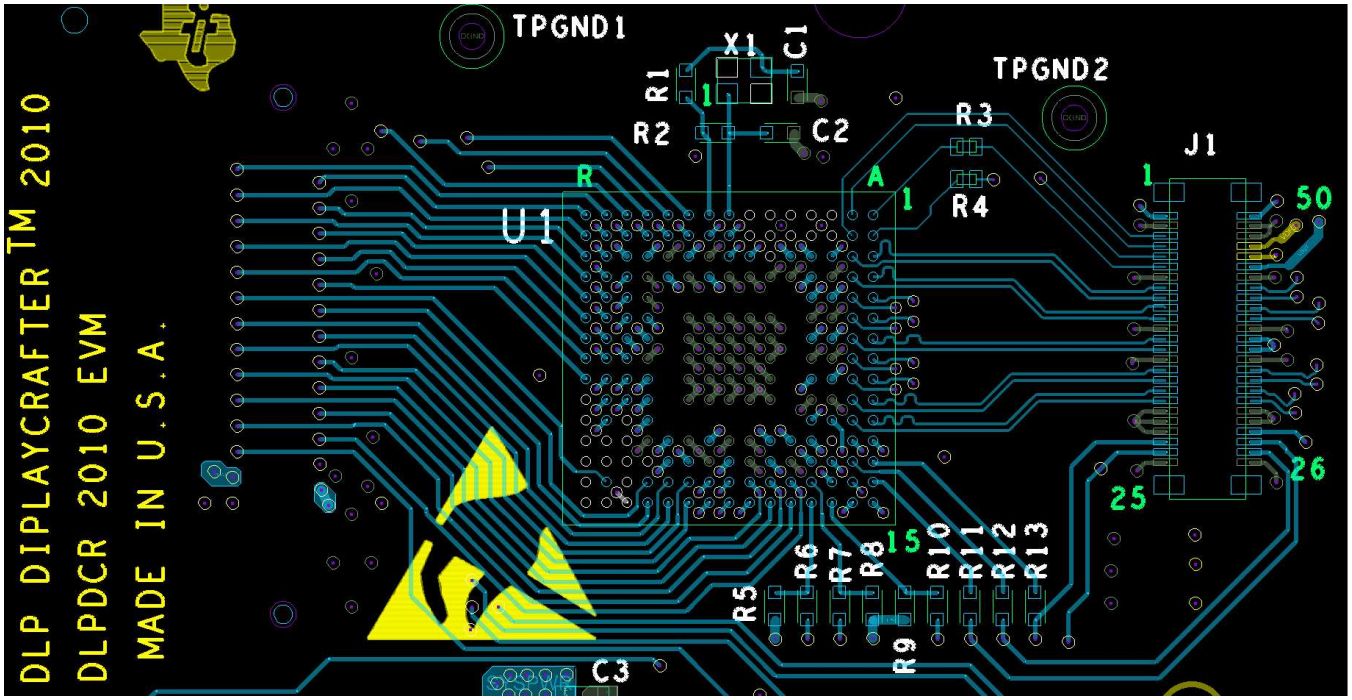

Figure 31. Example Layout

11.3 Thermal Considerations

The underlying thermal limitation for the DLPC343x is that the maximum operating junction temperature (T_J) not be exceeded (this is defined in the *Recommended Operating Conditions*). This temperature is dependent on operating ambient temperature, airflow, PCB design (including the component layout density and the amount of copper used), power dissipation of the DLPC343x, and power dissipation of surrounding components. The DLPC343x's package is designed primarily to extract heat through the power and ground planes of the PCB. Thus, copper content and airflow over the PCB are important factors.

The recommended maximum operating ambient temperature (T_A) is provided primarily as a design target and is based on maximum DLPC343x power dissipation and $R_{\theta JA}$ at 0 m/s of forced airflow, where $R_{\theta JA}$ is the thermal resistance of the package as measured using a JEDEC standard high-k 2s2p PCB with two, 1-oz. power planes. This JEDEC test PCB is not necessarily representative of the DLPC343x PCB; the reported thermal resistance may not be accurate in the actual product application. Although the actual thermal resistance may be different, it is the best information available during the design phase to estimate thermal performance. However, after the PCB is designed and the product is built, TI highly recommended that thermal performance be measured and validated.

To do this, measure the top center case temperature under the worse case product scenario (max power dissipation, max voltage, max ambient temperature) and validated not to exceed the maximum recommended case temperature (T_C). This specification is based on the measured φ_{JT} for the DLPC343x package and provides a relatively accurate correlation to junction temperature. Take care when measuring this case temperature to prevent accidental cooling of the package surface. TI recommends a small (approximately 40 gauge) thermocouple. The bead and thermocouple wire should contact the top of the package and be covered with a minimal amount of thermally conductive epoxy. The wires should be routed closely along the package and the board surface to avoid cooling the bead through the wires.

Copyright © 2014–2016, Texas Instruments Incorporated

12 Device and Documentation Support

12.1 Device Support

12.1.1 Third-Party Products Disclaimer

TI'S PUBLICATION OF INFORMATION REGARDING THIRD-PARTY PRODUCTS OR SERVICES DOES NOT CONSTITUTE AN ENDORSEMENT REGARDING THE SUITABILITY OF SUCH PRODUCTS OR SERVICES OR A WARRANTY, REPRESENTATION OR ENDORSEMENT OF SUCH PRODUCTS OR SERVICES, EITHER ALONE OR IN COMBINATION WITH ANY TI PRODUCT OR SERVICE.

12.1.2 Device Nomenclature

12.1.2.1 Device Markings

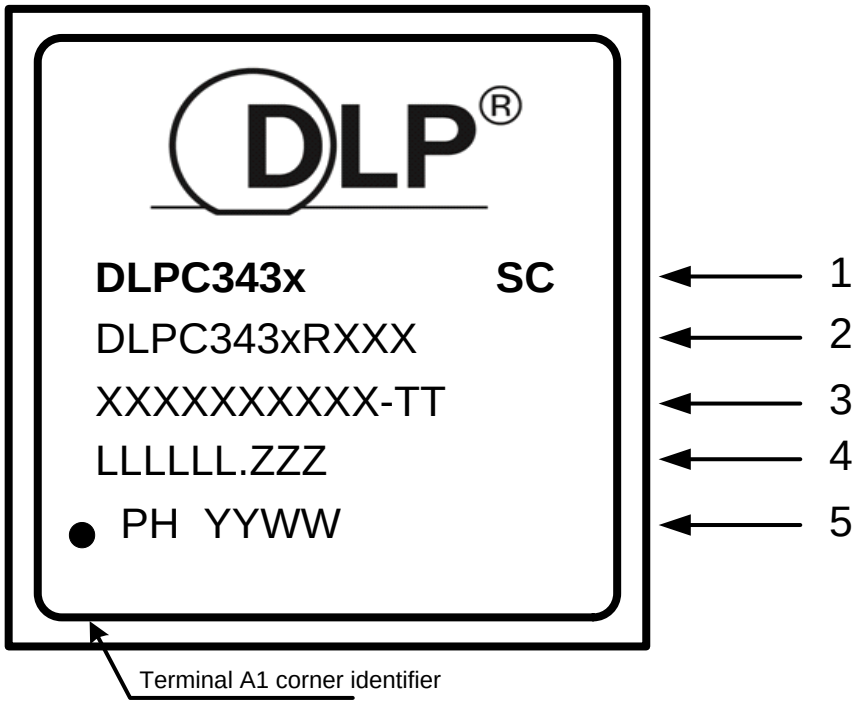

Marking Definitions:

Line 1:	DLP® Device Name: DLPC343x = **x** indicates a 3 or 8 device name ID. SC: Solder ball composition e1: Indicates lead-free solder balls consisting of SnAgCu G8: Indicates lead-free solder balls consisting of tin-silver-copper (SnAgCu) with silver content less than or equal to 1.5% and that the mold compound meets TI's definition of green.
Line 2:	TI Part Number DLP® Device Name: DLPC343x = **x** indicates a 3 or 8 device name ID. **R** corresponds to the TI device revision letter for example A, B or C **XXX** corresponds to the device package designator.
Line 3:	XXXXXXXXXX-TT Manufacturer part number
Line 4:	LLLLLL.ZZZ Foundry lot code for semiconductor wafers and lead-free solder ball marking LLLLLL: Fab lot number ZZZ: Lot split number

Copyright © 2014–2016, Texas Instruments Incorporated

Device Support (continued)

Line 5: PH YYWW: Package assembly information
PH: Manufacturing site
YYWW: Date code (YY = Year :: WW = Week)

NOTE

1. Engineering prototype samples are marked with an **X** suffix appended to the TI part number. For example, 2512737-0001X.
2. See Table 4, for DLPC343x resolutions on the DMD supported per part number.

12.1.3 Video Timing Parameter Definitions

Active Lines Per Frame (ALPF) Defines the number of lines in a frame containing displayable data: ALPF is a subset of the TLPF.

Active Pixels Per Line (APPL) Defines the number of pixel clocks in a line containing displayable data: APPL is a subset of the TPPL.

Horizontal Back Porch (HBP) Blanking Number of blank pixel clocks after horizontal sync but before the first active pixel. Note: HBP times are reference to the leading (active) edge of the respective sync signal.

Horizontal Front Porch (HFP) Blanking Number of blank pixel clocks after the last active pixel but before Horizontal Sync.

Horizontal Sync (HS) Timing reference point that defines the start of each horizontal interval (line). The absolute reference point is defined by the active edge of the HS signal. The active edge (either rising or falling edge as defined by the source) is the reference from which all horizontal blanking parameters are measured.

Total Lines Per Frame (TLPF) Defines the vertical period (or frame time) in lines: TLPF = Total number of lines per frame (active and inactive).

Total Pixel Per Line (TPPL) Defines the horizontal line period in pixel clocks: TPPL = Total number of pixel clocks per line (active and inactive).

Vertical Sync (VS) Timing reference point that defines the start of the vertical interval (frame). The absolute reference point is defined by the active edge of the VS signal. The active edge (either rising or falling edge as defined by the source) is the reference from which all vertical blanking parameters are measured.

Vertical Back Porch (VBP) Blanking Number of blank lines after the leading edge of vertical sync but before the first active line.

Vertical Front Porch (VFP) Blanking Number of blank lines after the leading edge of the last active line but before vertical sync.

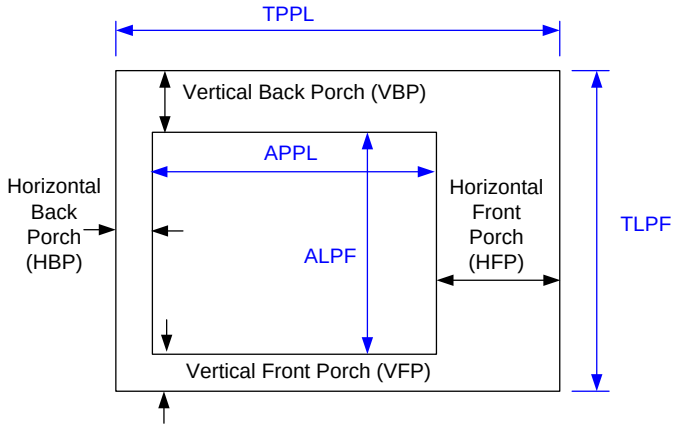

12.2 Related Links

The table below lists quick access links. Categories include technical documents, support and community resources, tools and software, and quick access to sample or buy.

Table 16. Related Links

PARTS	PRODUCT FOLDER	SAMPLE & BUY	TECHNICAL DOCUMENTS	TOOLS & SOFTWARE	SUPPORT & COMMUNITY
DLPC3433	Click here	Click here	Click here	Click here	Click here
DLPC3438	Click here	Click here	Click here	Click here	Click here
DLPA2000	Click here	Click here	Click here	Click here	Click here
DLPA2005	Click here	Click here	Click here	Click here	Click here
DLPA3000	Click here	Click here	Click her	Click here	Click here

12.3 Community Resources

The following links connect to TI community resources. Linked contents are provided "AS IS" by the respective contributors. They do not constitute TI specifications and do not necessarily reflect TI's views; see TI's Terms of Use.

TI E2E™ Online Community ***TI's Engineer-to-Engineer (E2E) Community.*** Created to foster collaboration among engineers. At e2e.ti.com, you can ask questions, share knowledge, explore ideas and help solve problems with fellow engineers.

Design Support ***TI's Design Support*** Quickly find helpful E2E forums along with design support tools and contact information for technical support.

12.4 Trademarks

IntelliBright, E2E are trademarks of Texas Instruments.
DLP is a registered trademark of Texas Instruments.
All other trademarks are the property of their respective owners.

12.5 Electrostatic Discharge Caution



These devices have limited built-in ESD protection. The leads should be shorted together or the device placed in conductive foam during storage or handling to prevent electrostatic damage to the MOS gates.

12.6 Glossary

SLYZ022 — *TI Glossary*.

This glossary lists and explains terms, acronyms, and definitions.

13 Mechanical, Packaging, and Orderable Information

The following pages include mechanical, packaging, and orderable information. This information is the most current data available for the designated devices. This data is subject to change without notice and revision of this document. For browser-based versions of this data sheet, refer to the left-hand navigation.

Copyright © 2014–2016, Texas Instruments Incorporated

13.1 Package Option Addendum

13.1.1 Packaging Information

Orderable Device	Status (1)	Package Type	Package Drawing	Pins	Package Qty	Eco Plan (2)	Lead/Ball Finish	MSL Peak Temp (3)	Op Temp (°C)	Device Marking(4)(5)
DLPC3433CZVB	ACTIVE	NFBGA	ZVB	176	260	Call TI	Call TI	Level-3-260C-168 HRS	–30 to 85	
DLPC3438CZEZ	ACTIVE	NFBGA	ZEZ	201	160	Call TI	Call TI	Level-3-260C-168 HRS	–30 to 85	

(1) The marketing status values are defined as follows:
ACTIVE: Product device recommended for new designs.
LIFEBUY: TI has announced that the device will be discontinued, and a lifetime-buy period is in effect.
NRND: Not recommended for new designs. Device is in production to support existing customers, but TI does not recommend using this part in a new design.
PRE_PROD Unannounced device, not in production, not available for mass market, nor on the web, samples not available.
PREVIEW: Device has been announced but is not in production. Samples may or may not be available.
OBSOLETE: TI has discontinued the production of the device.

(2) Eco Plan - The planned eco-friendly classification: Pb-Free (RoHS), Pb-Free (RoHS Exempt), or Green (RoHS & no Sb/Br) - please check http://www.ti.com/productcontent for the latest availability information and additional product content details.
TBD: The Pb-Free/Green conversion plan has not been defined.
Pb-Free (RoHS): TI's terms "Lead-Free" or "Pb-Free" mean semiconductor products that are compatible with the current RoHS requirements for all 6 substances, including the requirement that lead not exceed 0.1% by weight in homogeneous materials. Where designed to be soldered at high temperatures, TI Pb-Free products are suitable for use in specified lead-free processes.
Pb-Free (RoHS Exempt): This component has a RoHS exemption for either 1) lead-based flip-chip solder bumps used between the die and package, or 2) lead-based die adhesive used between the die and leadframe. The component is otherwise considered Pb-Free (RoHS compatible) as defined above.
Green (RoHS & no Sb/Br): TI defines "Green" to mean Pb-Free (RoHS compatible), and free of Bromine (Br) and Antimony (Sb) based flame retardants (Br or Sb do not exceed 0.1% by weight in homogeneous material)

(3) MSL, Peak Temp. -- The Moisture Sensitivity Level rating according to the JEDEC industry standard classifications, and peak solder temperature.

(4) There may be additional marking, which relates to the logo, the lot trace code information, or the environmental category on the device

(5) Multiple Device markings will be inside parentheses. Only on Device Marking contained in parentheses and separated by a "~" will appear on a device. If a line is indented then it is a continuation of the previous line and the two combined represent the entire Device Marking for that device.

Important Information and Disclaimer: The information provided on this page represents TI's knowledge and belief as of the date that it is provided. TI bases its knowledge and belief on information provided by third parties, and makes no representation or warranty as to the accuracy of such information. Efforts are underway to better integrate information from third parties. TI has taken and continues to take reasonable steps to provide representative and accurate information but may not have conducted destructive testing or chemical analysis on incoming materials and chemicals. TI and TI suppliers consider certain information to be proprietary, and thus CAS numbers and other limited information may not be available for release.

In no event shall TI's liability arising out of such information exceed the total purchase price of the TI part(s) at issue in this document sold by TI to Customer on an annual basis.

ZVB (S–PBGA–N176) PLASTIC BALL GRID ARRAY

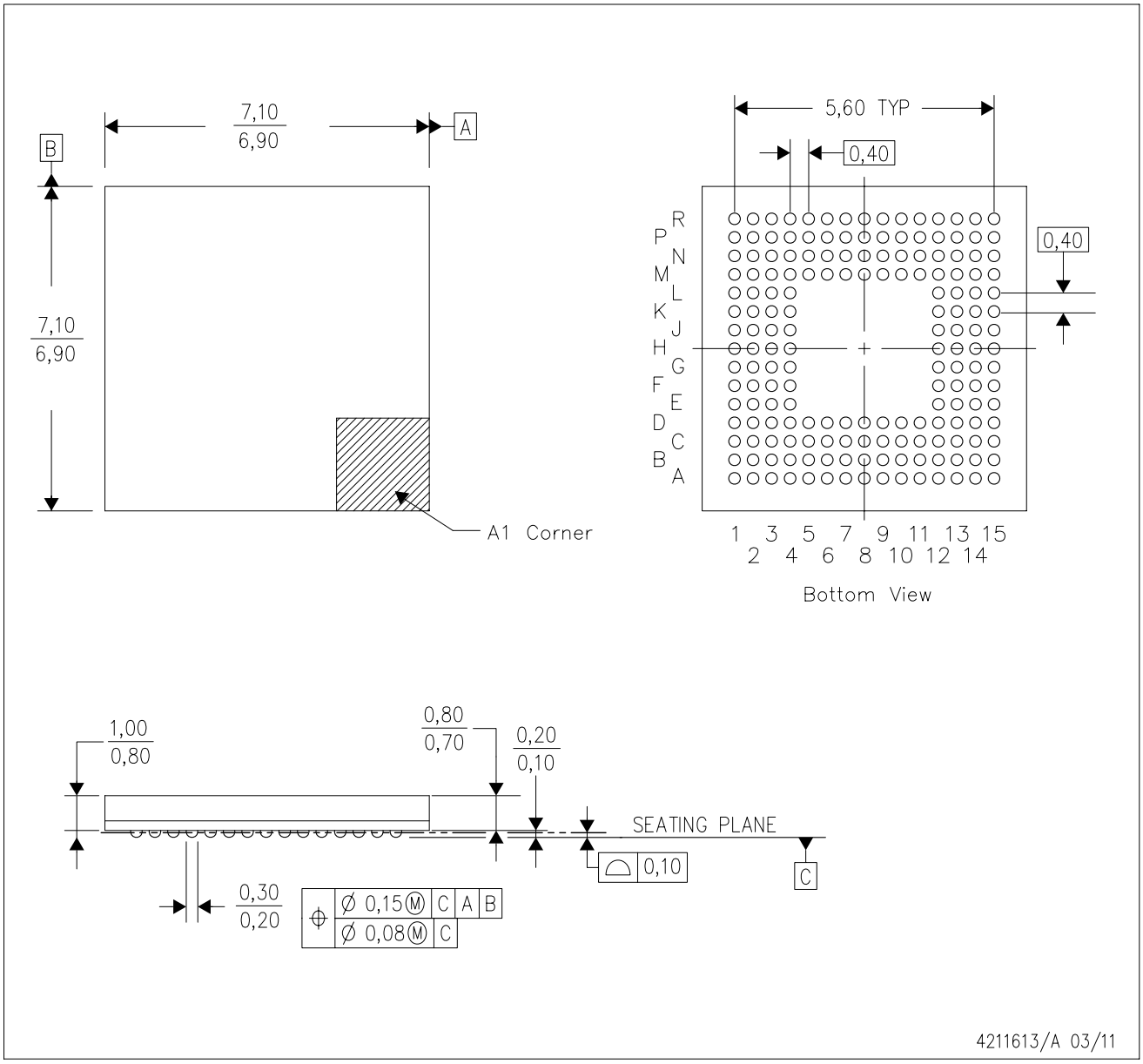

NOTES:
A. All linear dimensions are in millimeters. Dimensioning and tolerancing per ASME Y14.5M–1994.
B. This drawing is subject to change without notice.
C. This package is Pb–free.

PACKAGE OUTLINE

ZEZ0201A

NFBGA - 1 mm max height

PLASTIC BALL GRID ARRAY

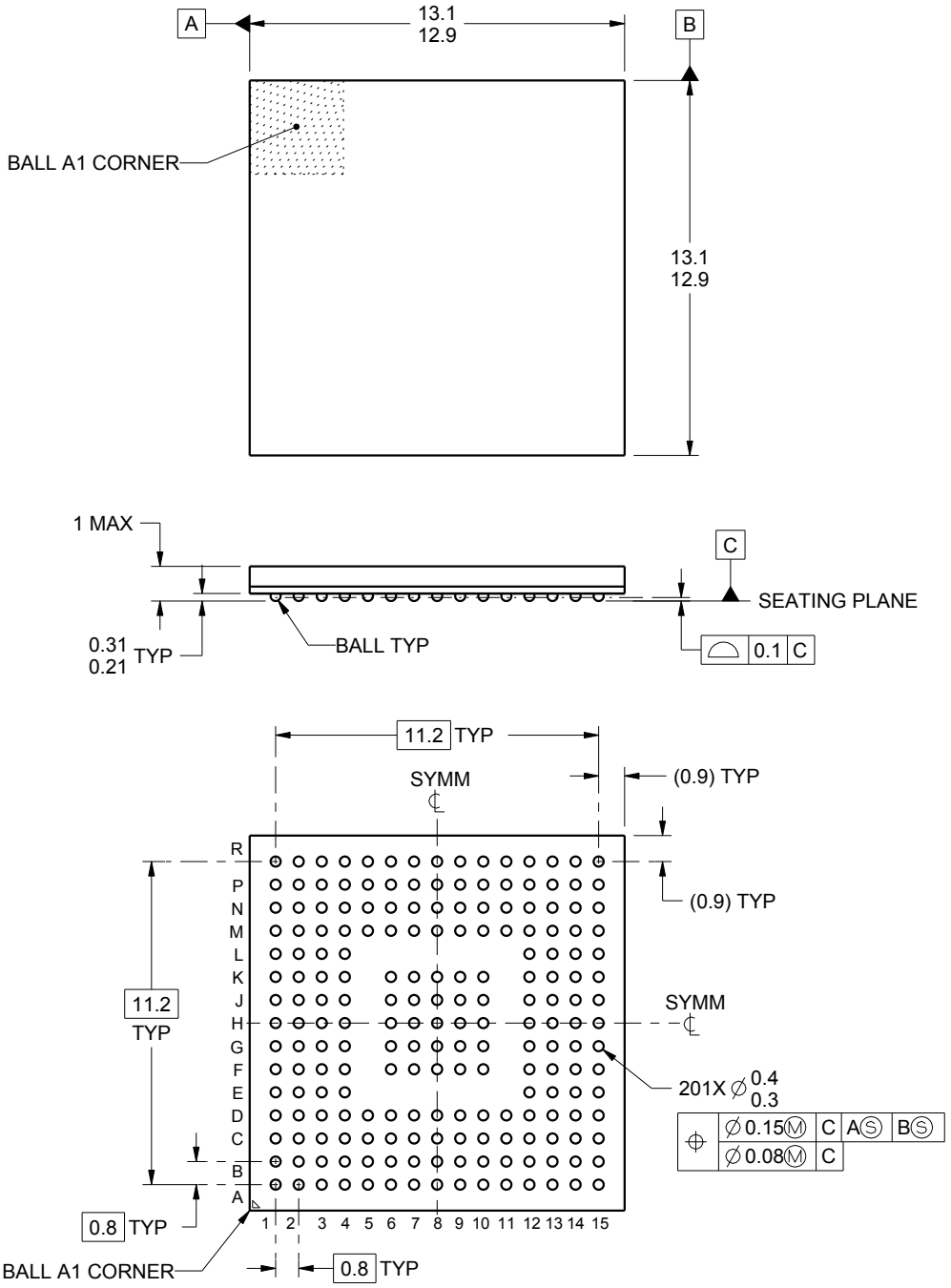

4221521/A 03/2015

NOTES:

1. All linear dimensions are in millimeters. Any dimensions in parenthesis are for reference only. Dimensioning and tolerancing per ASME Y14.5M.
2. This drawing is subject to change without notice.

EXAMPLE BOARD LAYOUT

ZEZ0201A

NFBGA - 1 mm max height

PLASTIC BALL GRID ARRAY

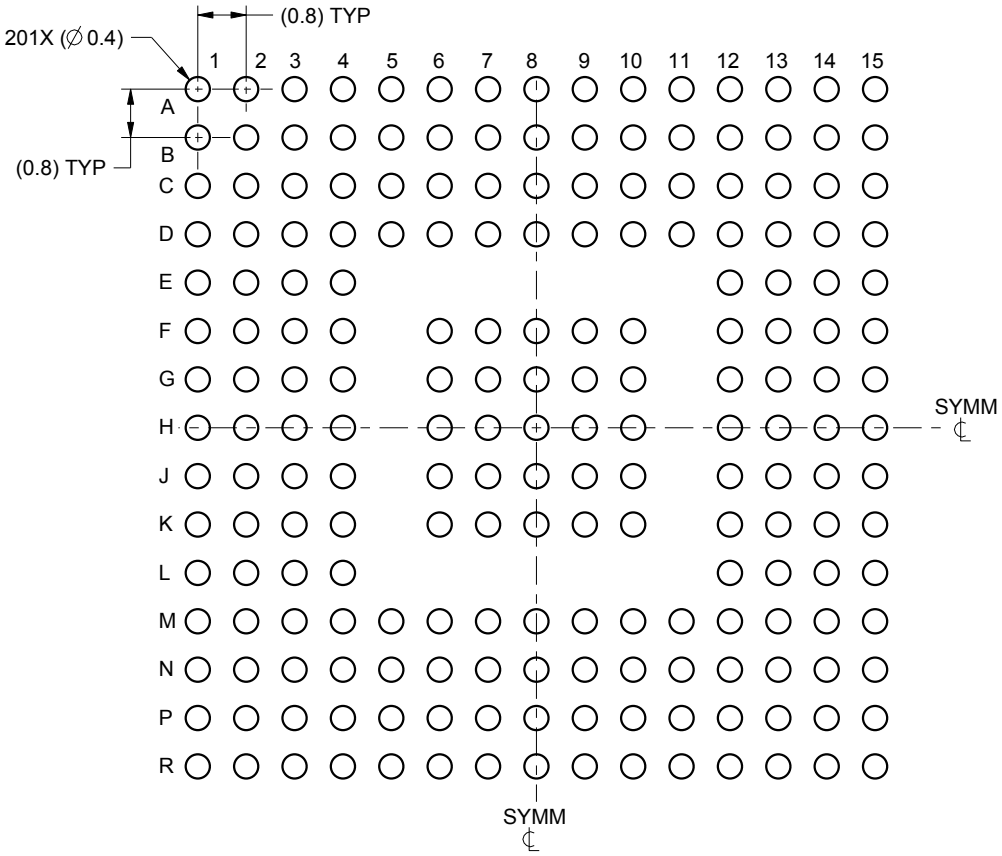

LAND PATTERN EXAMPLE
SCALE:8X

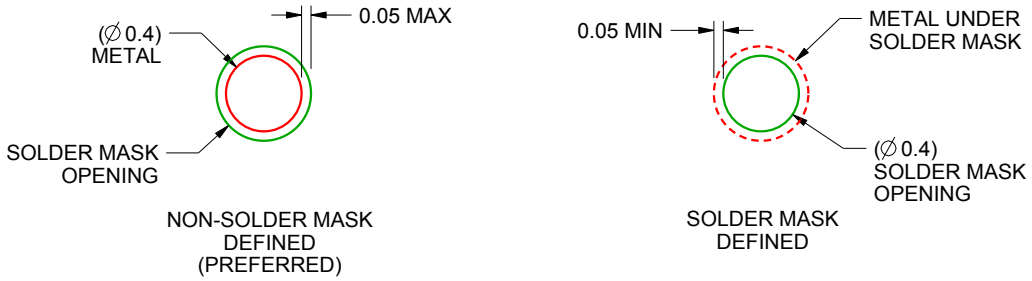

SOLDER MASK DETAILS
NOT TO SCALE

4221521/A 03/2015

NOTES: (continued)

3. Final dimensions may vary due to manufacturing tolerance considerations and also routing constraints.
   For information, see Texas Instruments literature number SPRAA99 (www.ti.com/lit/spraa99).

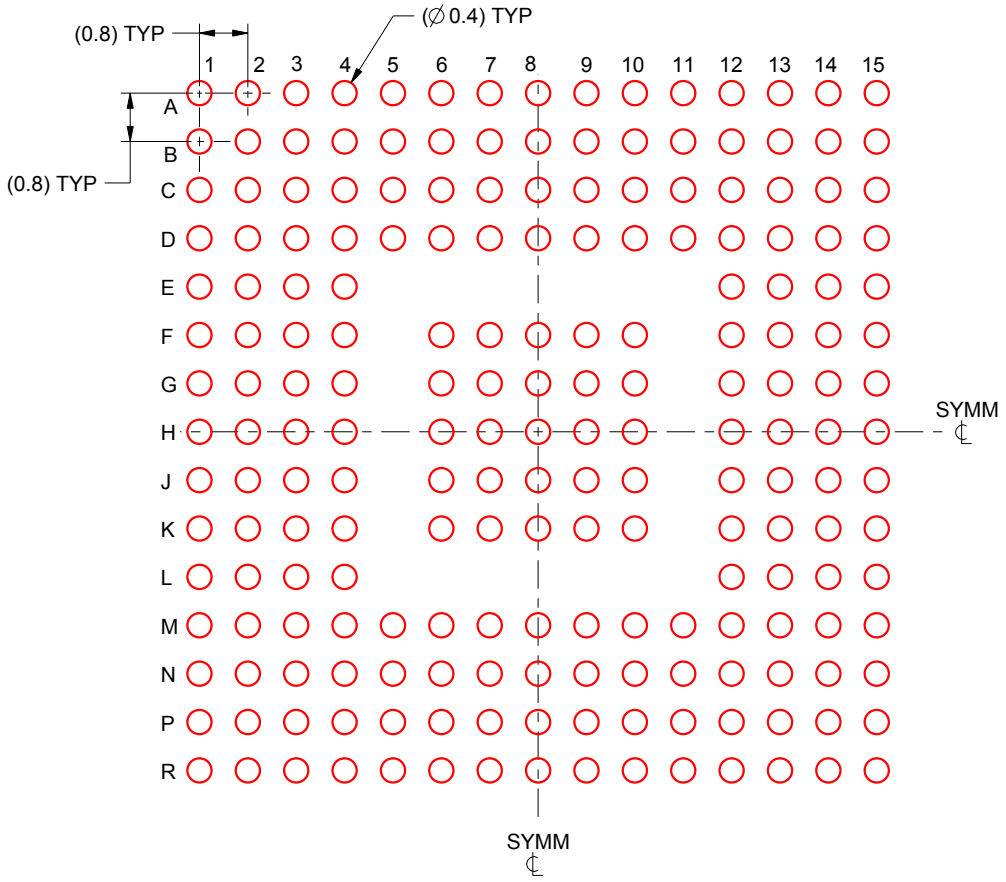

SOLDER PASTE EXAMPLE
BASED ON 0.15 mm THICK STENCIL
SCALE:8X

4221521/A 03/2015

NOTES: (continued)

4. Laser cutting apertures with trapezoidal walls and rounded corners may offer better paste release.

IMPORTANT NOTICE

Texas Instruments Incorporated (TI) reserves the right to make corrections, enhancements, improvements and other changes to its semiconductor products and services per JESD46, latest issue, and to discontinue any product or service per JESD48, latest issue. Buyers should obtain the latest relevant information before placing orders and should verify that such information is current and complete.

TI's published terms of sale for semiconductor products (http://www.ti.com/sc/docs/stdterms.htm) apply to the sale of packaged integrated circuit products that TI has qualified and released to market. Additional terms may apply to the use or sale of other types of TI products and services.

Reproduction of significant portions of TI information in TI data sheets is permissible only if reproduction is without alteration and is accompanied by all associated warranties, conditions, limitations, and notices. TI is not responsible or liable for such reproduced documentation. Information of third parties may be subject to additional restrictions. Resale of TI products or services with statements different from or beyond the parameters stated by TI for that product or service voids all express and any implied warranties for the associated TI product or service and is an unfair and deceptive business practice. TI is not responsible or liable for any such statements.

Buyers and others who are developing systems that incorporate TI products (collectively, "Designers") understand and agree that Designers remain responsible for using their independent analysis, evaluation and judgment in designing their applications and that Designers have full and exclusive responsibility to assure the safety of Designers' applications and compliance of their applications (and of all TI products used in or for Designers' applications) with all applicable regulations, laws and other applicable requirements. Designer represents that, with respect to their applications, Designer has all the necessary expertise to create and implement safeguards that (1) anticipate dangerous consequences of failures, (2) monitor failures and their consequences, and (3) lessen the likelihood of failures that might cause harm and take appropriate actions. Designer agrees that prior to using or distributing any applications that include TI products, Designer will thoroughly test such applications and the functionality of such TI products as used in such applications.

TI's provision of technical, application or other design advice, quality characterization, reliability data or other services or information, including, but not limited to, reference designs and materials relating to evaluation modules, (collectively, "TI Resources") are intended to assist designers who are developing applications that incorporate TI products; by downloading, accessing or using TI Resources in any way, Designer (individually or, if Designer is acting on behalf of a company, Designer's company) agrees to use any particular TI Resource solely for this purpose and subject to the terms of this Notice.

TI's provision of TI Resources does not expand or otherwise alter TI's applicable published warranties or warranty disclaimers for TI products, and no additional obligations or liabilities arise from TI providing such TI Resources. TI reserves the right to make corrections, enhancements, improvements and other changes to its TI Resources. TI has not conducted any testing other than that specifically described in the published documentation for a particular TI Resource.

Designer is authorized to use, copy and modify any individual TI Resource only in connection with the development of applications that include the TI product(s) identified in such TI Resource. NO OTHER LICENSE, EXPRESS OR IMPLIED, BY ESTOPPEL OR OTHERWISE TO ANY OTHER TI INTELLECTUAL PROPERTY RIGHT, AND NO LICENSE TO ANY TECHNOLOGY OR INTELLECTUAL PROPERTY RIGHT OF TI OR ANY THIRD PARTY IS GRANTED HEREIN, including but not limited to any patent right, copyright, mask work right, or other intellectual property right relating to any combination, machine, or process in which TI products or services are used. Information regarding or referencing third-party products or services does not constitute a license to use such products or services, or a warranty or endorsement thereof. Use of TI Resources may require a license from a third party under the patents or other intellectual property of the third party, or a license from TI under the patents or other intellectual property of TI.

TI RESOURCES ARE PROVIDED "AS IS" AND WITH ALL FAULTS. TI DISCLAIMS ALL OTHER WARRANTIES OR REPRESENTATIONS, EXPRESS OR IMPLIED, REGARDING RESOURCES OR USE THEREOF, INCLUDING BUT NOT LIMITED TO ACCURACY OR COMPLETENESS, TITLE, ANY EPIDEMIC FAILURE WARRANTY AND ANY IMPLIED WARRANTIES OF MERCHANTABILITY, FITNESS FOR A PARTICULAR PURPOSE, AND NON-INFRINGEMENT OF ANY THIRD PARTY INTELLECTUAL PROPERTY RIGHTS. TI SHALL NOT BE LIABLE FOR AND SHALL NOT DEFEND OR INDEMNIFY DESIGNER AGAINST ANY CLAIM, INCLUDING BUT NOT LIMITED TO ANY INFRINGEMENT CLAIM THAT RELATES TO OR IS BASED ON ANY COMBINATION OF PRODUCTS EVEN IF DESCRIBED IN TI RESOURCES OR OTHERWISE. IN NO EVENT SHALL TI BE LIABLE FOR ANY ACTUAL, DIRECT, SPECIAL, COLLATERAL, INDIRECT, PUNITIVE, INCIDENTAL, CONSEQUENTIAL OR EXEMPLARY DAMAGES IN CONNECTION WITH OR ARISING OUT OF TI RESOURCES OR USE THEREOF, AND REGARDLESS OF WHETHER TI HAS BEEN ADVISED OF THE POSSIBILITY OF SUCH DAMAGES.

Unless TI has explicitly designated an individual product as meeting the requirements of a particular industry standard (e.g., ISO/TS 16949 and ISO 26262), TI is not responsible for any failure to meet such industry standard requirements.

Where TI specifically promotes products as facilitating functional safety or as compliant with industry functional safety standards, such products are intended to help enable customers to design and create their own applications that meet applicable functional safety standards and requirements. Using products in an application does not by itself establish any safety features in the application. Designers must ensure compliance with safety-related requirements and standards applicable to their applications. Designer may not use any TI products in life-critical medical equipment unless authorized officers of the parties have executed a special contract specifically governing such use. Life-critical medical equipment is medical equipment where failure of such equipment would cause serious bodily injury or death (e.g., life support, pacemakers, defibrillators, heart pumps, neurostimulators, and implantables). Such equipment includes, without limitation, all medical devices identified by the U.S. Food and Drug Administration as Class III devices and equivalent classifications outside the U.S.

TI may expressly designate certain products as completing a particular qualification (e.g., Q100, Military Grade, or Enhanced Product). Designers agree that it has the necessary expertise to select the product with the appropriate qualification designation for their applications and that proper product selection is at Designers' own risk. Designers are solely responsible for compliance with all legal and regulatory requirements in connection with such selection.

Designer will fully indemnify TI and its representatives against any damages, costs, losses, and/or liabilities arising out of Designer's non-compliance with the terms and provisions of this Notice.

Mailing Address: Texas Instruments, Post Office Box 655303, Dallas, Texas 75265
Copyright © 2018, Texas Instruments Incorporated