TOSHIBA

FILE NO. 330-9904

SERVICE MANUAL

3LCD DATA PROJECTOR

TLP450E, TLP451E
TLP650E, TLP651E
TLP450U, TLP451U
TLP650U, TLP651U

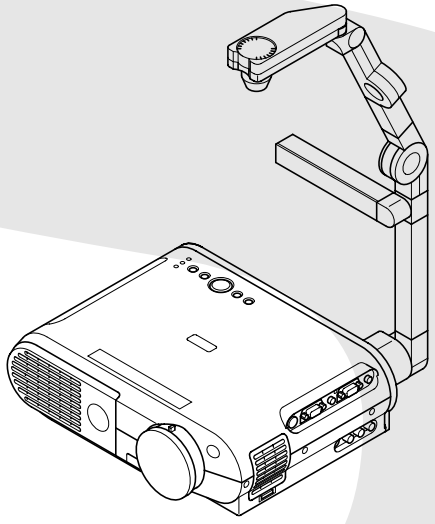

TLP451, TLP651

PRINTED IN JAPAN, Oct., 1999 Ⓢ

CONTENTS

SAFETY PRECAUTIONS I
IMPORTANT PRECAUTIONS I
IMPORTANT SAFETY INSTRUCTIONS II

SECTION 1
PART REPLACEMENT AND ADJUSTMENT PROCEDURES

1. LOCATION OF MAIN PARTS 1-1
2. LOCATION OF PC BOARDS 1-1
3. REPLACEMENT OF MECHANICAL PARTS 1-2
3-1. Camera Arm Assembly (Only for TLP451/651) 1-2
3-2. Lamp Assembly 1-2
3-3. Front Cover and Top Cover 1-3
3-4. Main PC Board 1-3
3-5. RGB PC Board 1-3
3-6. Handle and Fan Assembly 1-4
3-7. Power Supply Unit 1-4
3-8. Filter Assembly 1-5
3-9. Lamp House 1-5
3-10.Optical Engine 1-5
3-11. Input PC Board 1-6
3-12. Lens 1-6
3-13. Mirror Box 1-6
3-14. LCD Block and LCD Panel 1-7
3-15. CAM SW PC Board (Only for TLP451/651) 1-9
3-16. Arm Assembly (Only for TLP451/651) 1-9
3-17. Switch (Only for TLP451/651) 1-10
3-18. Camera PC Board (Only for TLP451/651) 1-10
3-19. Lamp PC Board (TLP451/651) 1-10
4. ELECTRICAL ADJUSTMENT 1-11
4-1. LCD Drive Adjustment 1-12
5. LED DISPLAY 1-16

SECTION 2
SERVICING DIAGRAMS

1. PART CONFIGURATION AND THEIR SYMBOLS 2-1
1-1. Replacing Subminiature “CHIP” Parts 2-1
1-2. Precoutions for Part Replacement 2-2
1-3. Solid Resistor Indication 2-2
1-4. Capacitance Indication 2-2
1-5. Inductor Indication 2-3
1-6. Waveform and Voltage Measurement 2-3
2. EACH SIGNAL FLOW 2-4
2-1. Operation at RGB Signal Input 2-4
2-2. Video Signal 2-4
2-3. Operation at Y/Pb/Pr Signal and HDTV Signal Input2-5
2-4. Camera Input Operation 2-5
2-5. Camera Overlay Signal 2-5
3. BLOCK DIAGRAMS 2-7
3-1. RGB Block Diagram 2-7
3-2. Input Block Diagram 2-8
3-3. Main Block Diagram 2-9
3-4. Digital Block Diagram 2-11
4. PRINTED WIRING BOARD AND SCHEMATIC DIAGRAM 2-12
5. CIRCUIT DIAGRAMS 2-15
5-1. Drive Circuit Diagram (for TLP650, TLP651) 2-15
5-2. Drive Circuit Diagram (for TLP450, TLP451) 2-19
5-3. Main Circuit Diagram (for TLP650, TLP651) 2-23
5-4. Main Circuit Diagram (for TLP450, TLP451) 2-27
5-5. Micon Circuit Diagram 2-31
5-6. RGB Circuit Diagram 2-35
5-7. Input Circuit Diagram 2-39
5-8. Power Supply Circuit Diagram 2-42
5-9. Camera Interface Circuit Diagram 2-45
5-10. ..... FAN Control Circuit Diagram 2-47
6. PC BOARDS 2-49
6-1. Input PC Board 2-49
6-2. CAM Switch PC Board 2-50
6-3. Main PC Board 2-51
6-4. RGB PC Board 2-55
6-5. LED PC Board 2-55
6-6. Sub Digital PC Board 2-56

SECTION 3
PARTS LIST

1. SAFETY PRECAUTION 3-1
2. NOTICE 3-1
3. ABBREVIATIONS 3-1
3-1. Integrated Circuit (IC) 3-1
3-2. Capacitor (Cap) 3-1
3-3. Resistor (Res) 3-1
4. EXPLODED VIEWS 3-2
4-1. Packing Assembly 3-2
4-2. Remote Control Unit 3-2
4-3. Chassis Assembly 3-3
4-4. Arm Assembly (TLP451, TLP651) 3-4
5. PARTS LIST 3-5

SECTION 1
PART REPLACEMENT AND ADJUSTMENT PROCEDURES

1. LOCATION OF MAIN PARTS

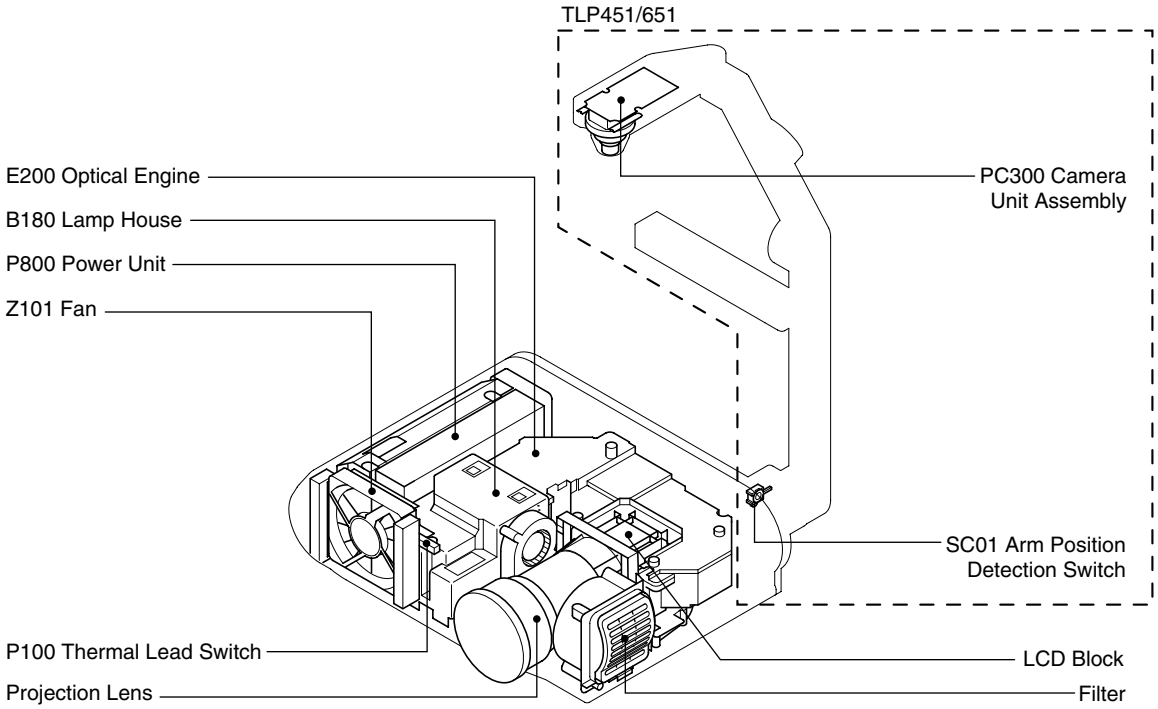

Fig. 1-1-1

2. LOCATION OF PC BOARDS

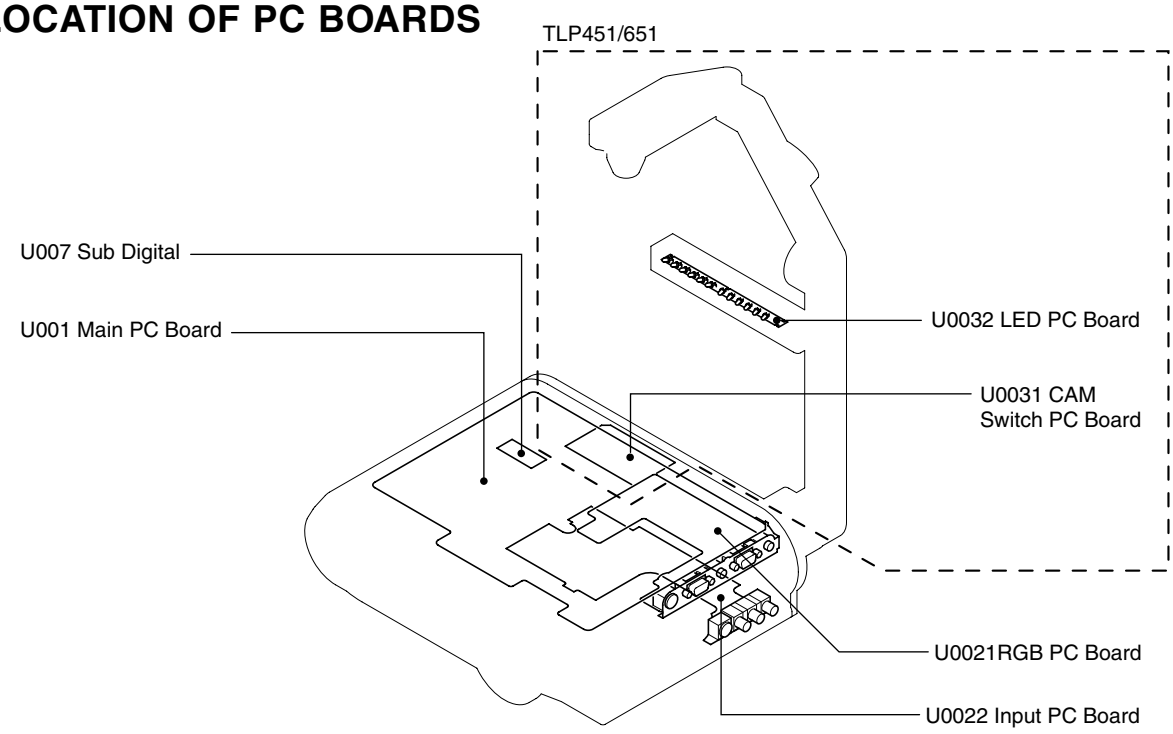

Fig. 1-2-1

CAUTIONS BEFORE STARTING SERVICING

Electronic parts are susceptible to static electricity and may easily damaged, so do not forget to take a proper grounding treatment as required.

Many screws are used inside the unit. To prevent missing, dropping, etc. of the screws, always use a magnetized screwdriver in servicing. Several kinds of screws are used and some of them need special cautions. That is, take care of the tapping screws securing molded parts and fine pitch screws used to secure metal parts. If they are used improperly, the screw holes will be easily damaged and the parts can not be fixed.

3. REPLACEMENT OF MECHANICAL PARTS

3-1. Camera Arm Assembly (Only for TLP451/651)

1. Remove six screws (1) and remove the camera arm assembly (2).
2. Remove the connector (3) connecting to the main unit.

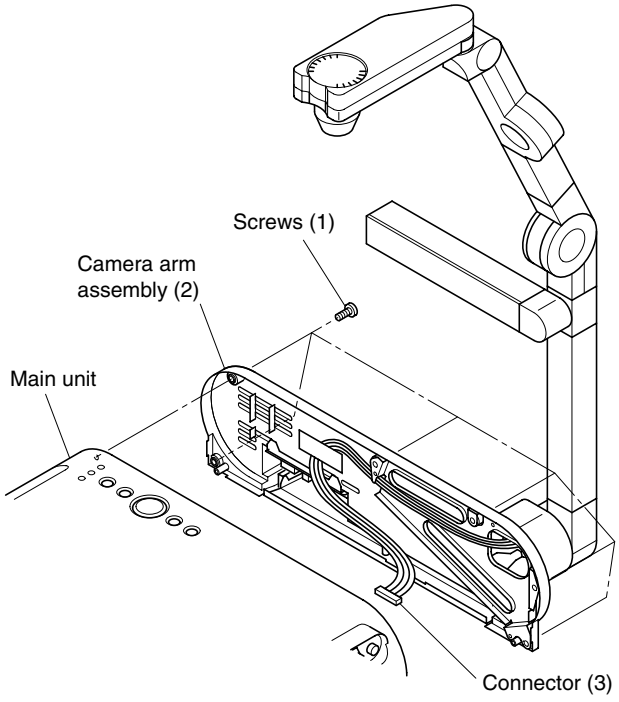

Fig. 1-3-1

3-2. Lamp Assembly

1. Loosen two screws (1) and remove the cover (2).
2. Pull down the handle to remove the lamp assembly (3).

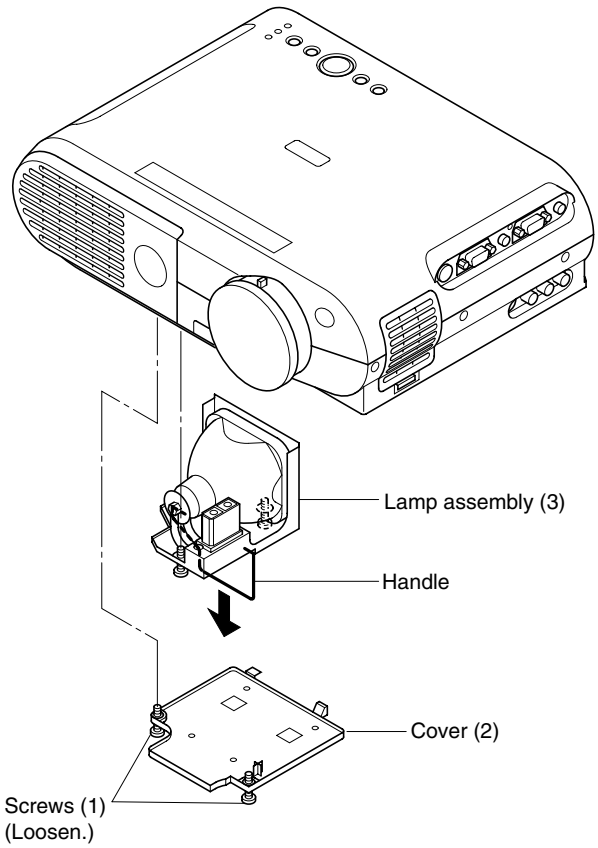

Fig. 1-3-2

3-3. Front Cover and Top Cover

1. Remove two screws (1) and remove the front cover (2) by sliding the portion A pushed with a thin bar in the arrow B direction.
2. Remove nine screws (3).
3. Push the handle (4) to one side and remove the top cover (5) by rotating in the arrow C direction.

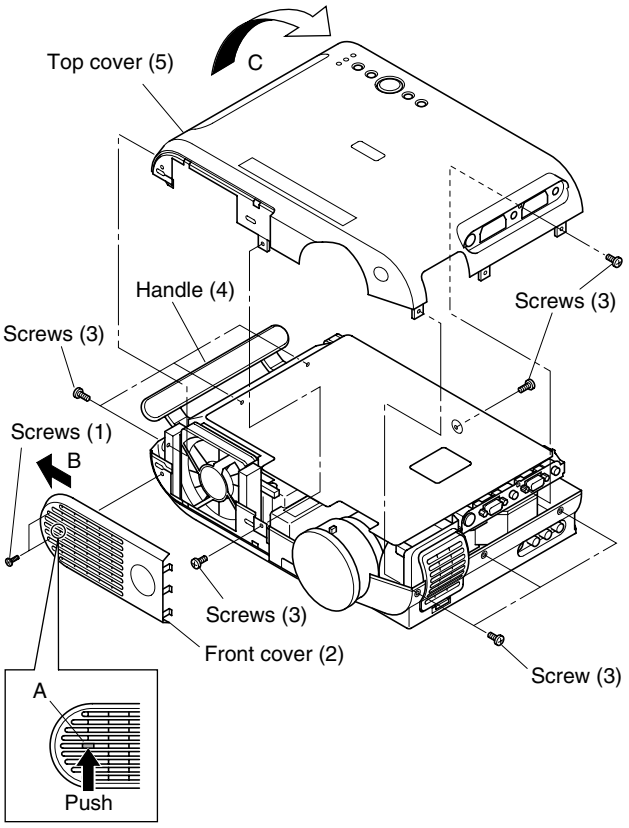

Fig. 1-3-3

3-4. Main PC Board

1. Remove four connectors (2) and five FFCs (3) connected to the main PC board (1).
2. Remove seven screws (4).
3. Lift the main PC board (1) upward and remove the main PC board (1) from the RGB PC board (5).

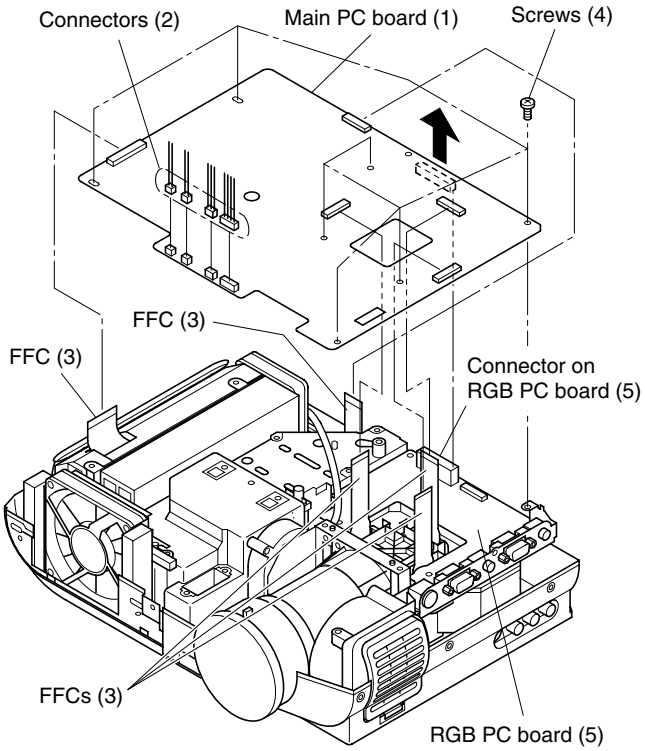

Fig. 1-3-4

3-5. RGB PC Board

1. Remove the FFC (1).
2. Remove four screws (2) and RGB PC board (3).
3. Remove four screws (4) and remove the cover (5) from the RGB PC board (3).

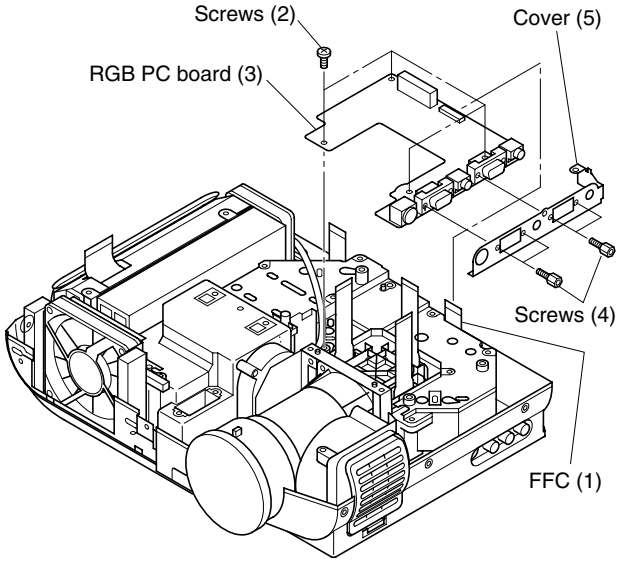

Fig. 1-3-5

3-6. Handle and Fan Assembly

1. Pull out the handle (1) upward.
2. Remove two screws (2) and fan assembly (3).
3. Remove two screws (4) and then remove the fan (5) from the fan bracket (6).

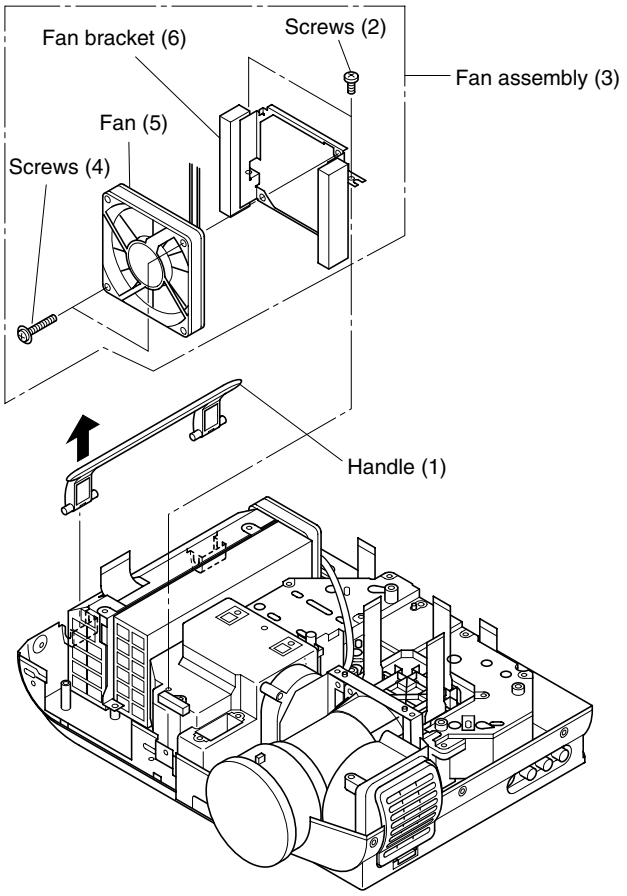

Fig. 1-3-6

3-7. Power Supply Unit

1. Remove two screws (1) and then remove the shield plate (2) and the socket (3). (Do not lose the shield plate (2).)
2. Remove two screws (4) and remove the power supply unit (5).
3. Remove two screws (6) and one screw (7) and remove the interlocking switch and plate (8).

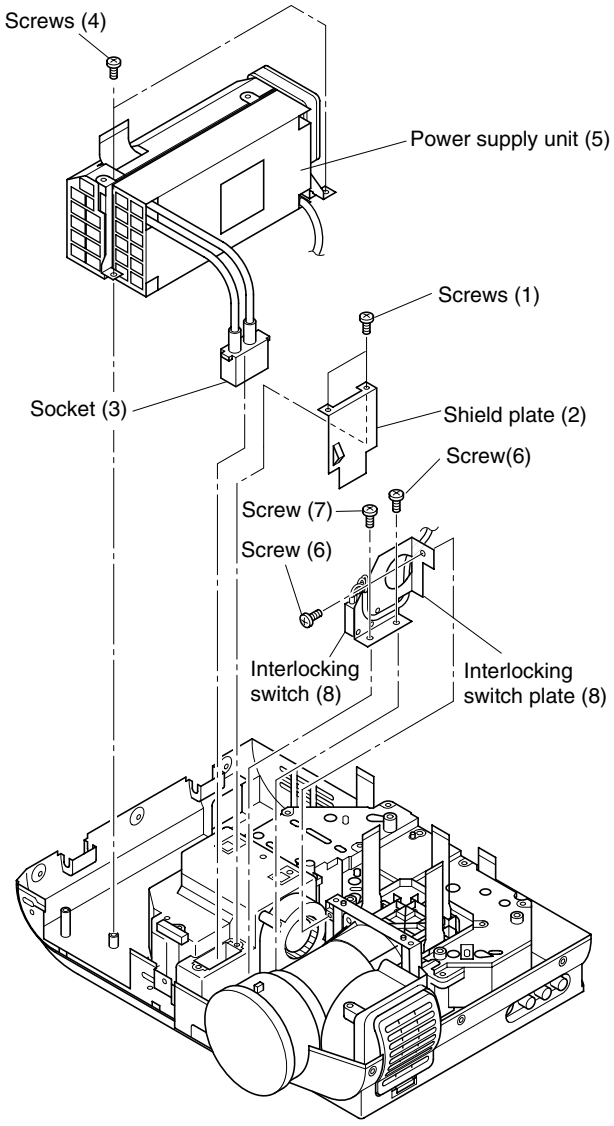

Fig. 1-3-7

3-8. Filter Assembly

1. Remove the filter cover (1) from the suction fan holder (2).
2. Remove the filters (3) and (4) from the filter cover (1). (When replacing and/or cleaning the filter, note the arrangement of the filters. Refer to Fig. A)
3. Remove two screws (5) and pull out the filter assembly (6) upward.
4. Remove two screws (7) and remove the fan (8).
5. Remove the suction fan mouse piece (9) from the suction fan holder (2).

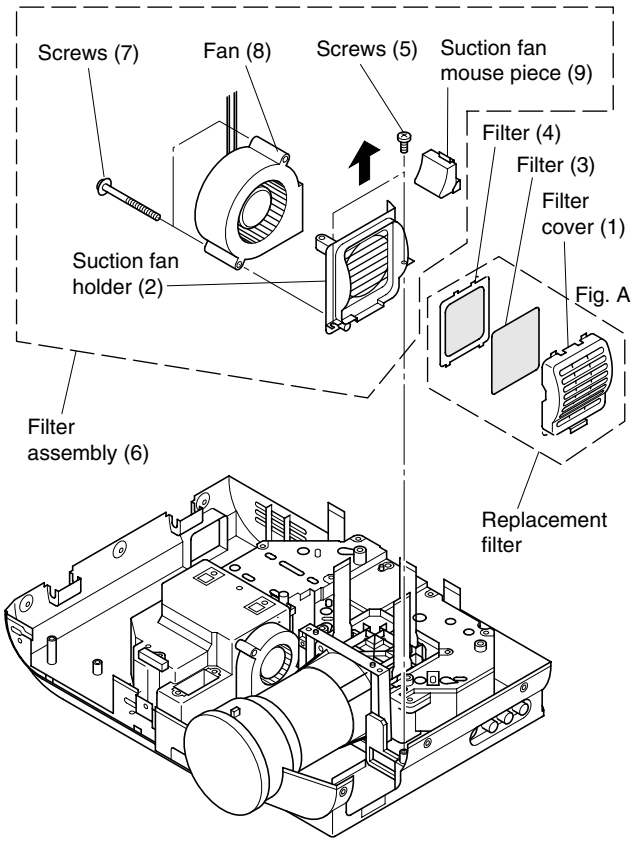

Fig. 1-3-8

3-9. Lamp House

1. Remove one screw (1) and (2) and then remove the lamp house (3).
2. Remove one screw (4) and then remove the temperature sensor switch (5).
3. Remove one screw (6) and then remove the fan (7).

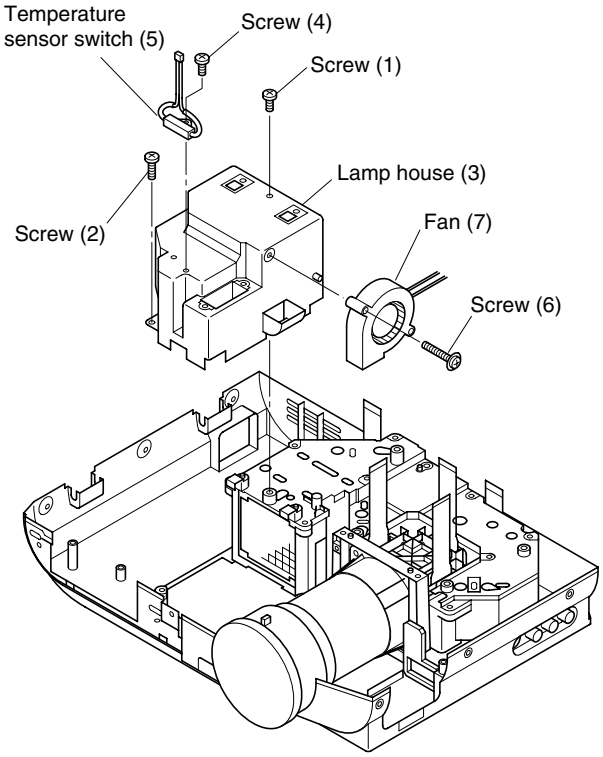

Fig. 1-3-9

3-10. Optical Engine

1. Remove four screws (1).
2. Remove the optical engine (2) by lifting upward.

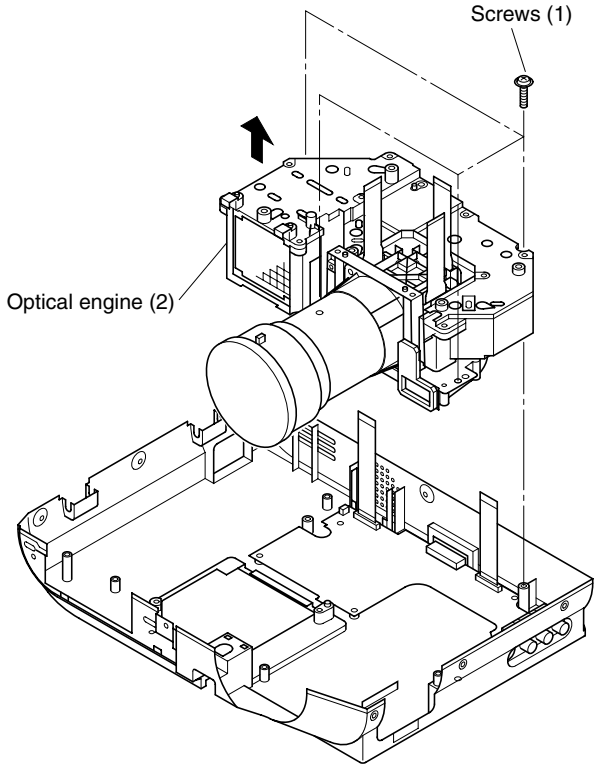

Fig. 1-3-10

3-11. Input PC Board

1. Remove five screws (1).
2. Remove the input PC board (2) by turning the arrow direction.

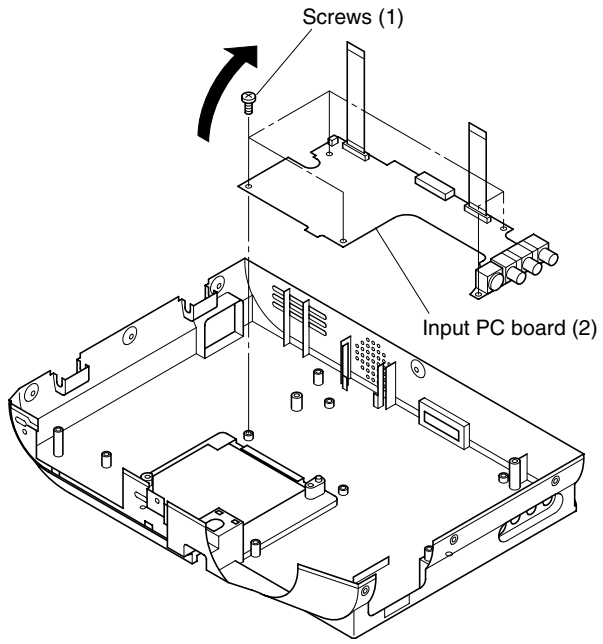

Fig. 1-3-11

3-12. Lens

1. Remove four screws (1) and then remove the lens (2).

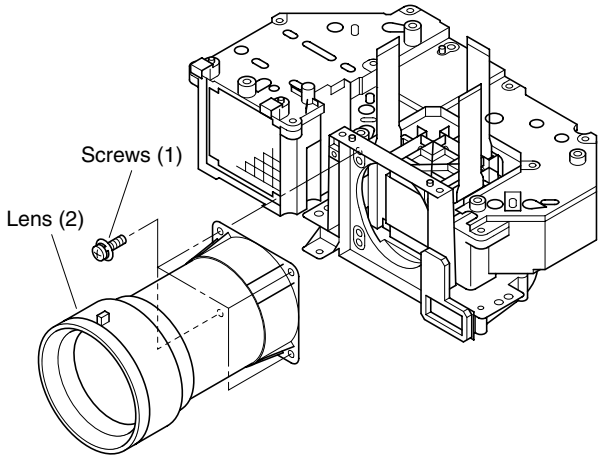

Fig. 1-3-12

3-13. Mirror Box

1. Remove three screws (1) and then remove the mirror box (2).

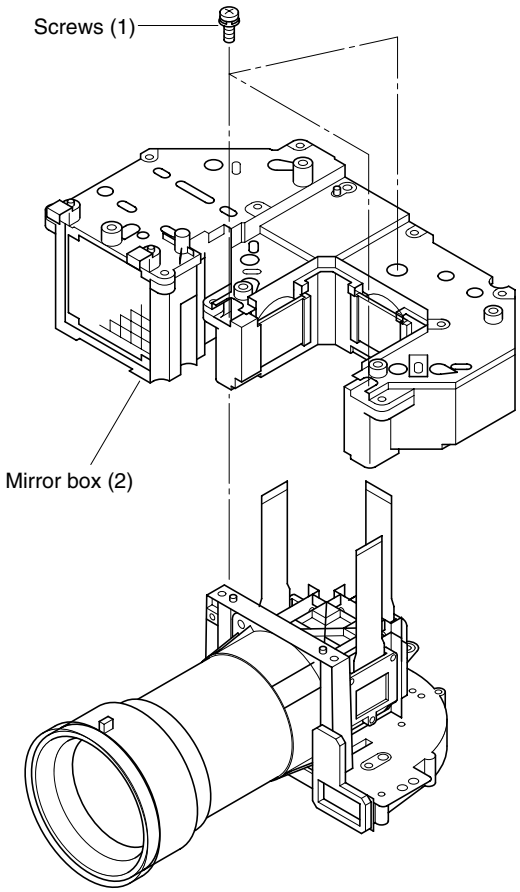

Fig. 1-3-13

3-14. LCD Block and LCD Panel

1. Remove three screws (1) and remove the LCD block (2).
2. Remove three screws (3) and remove the LCD panel (4).

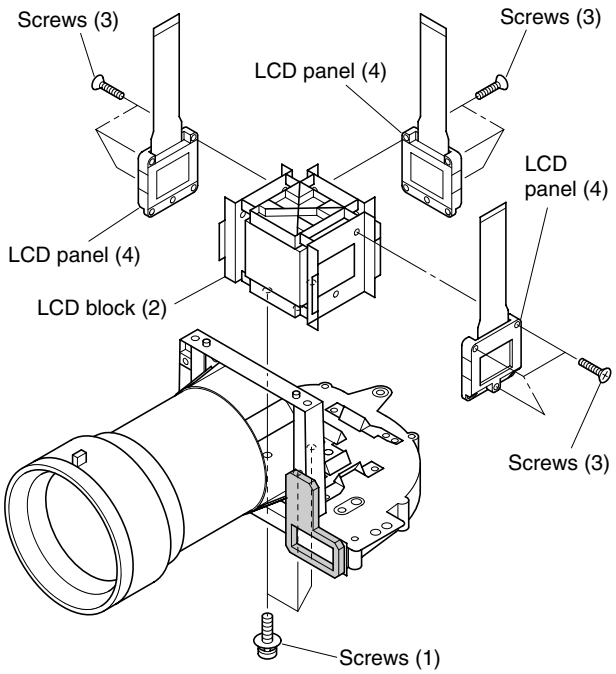

Fig. 1-3-14

3-14-1. Panel Replacement and Adjustment Procedures

< Replacement procedures >

1. Remove the prism block from the optical engine.
2. Remove the panel and the panel holder from the prism block. (Refer to Fig. 1-3-15.)

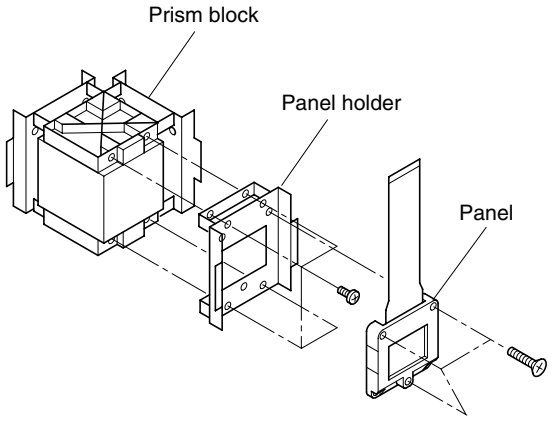

Fig. 1-3-15 Prism block exploded views

3. Mount a holder support for the service holder at the location of the panel holder removed. (Use screws removed in step 2.) (Refer to Fig. 1-3-16 for the following steps.)
4. Mount a new panel on the XY shifting plate with the Z rotation plate placed between them. (Use L upper and lower adjustment screws.) At this time, fix them so that two holes on the panel lower side are matched with the holes on the Z rotation plate.
5. Mount the Z rotation plate on the holder support. (Use S adjustment screws.) Tighten the S adjustment screws lightly.

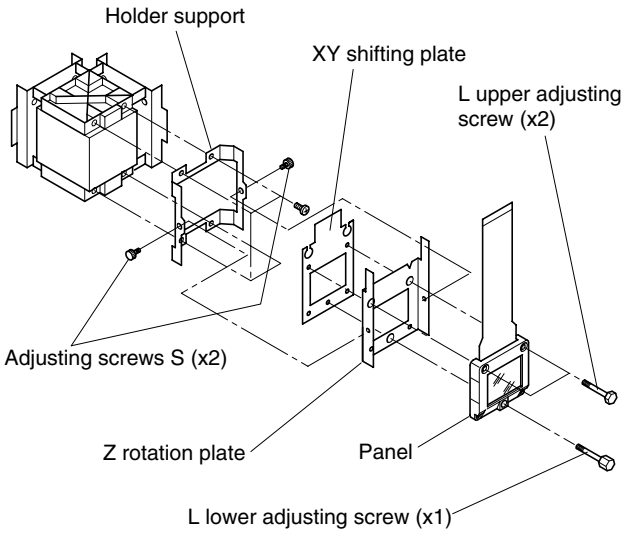

Fig. 1-3-16 Mounting view of a holder for service

< Panel adjustment procedures >

– carried out with a cross hatch signal (RGB input) received.

(1) Panel focus adjustment

– carried out with a single color (panel color replaced) status.

1. Shift the Z rotation plate by holding its handles located on the upper sides with fingers or a long-nose pliers, etc. and adjust to obtain the best focus at the whole screen. At this time, adjust the screen center focus by shifting the Z rotation plate entirely back and forth, the left/right screen focus balance by shifting the rotation plate to left/right rotation directions and the upper/lower screen focus balance by shifting it to upper/lower rotation directions.

2. Tighten the S adjusting screws with a wrench for servicing and fix the Z rotation plate. (Refer to Fig. 1-3-17.) If the focus adjusted is upset when fixing, loosen the S adjusting screws and perform the adjustment in step 1 again.

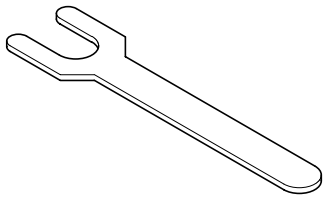

Fig. 1-3-17 Service wrench

3. Repeat the steps 1 and 2 until the Z rotation plate is fixed in the best focus condition. Finally, fix the Z rotation plate perfectly by tightening the S adjusting screws further with a long-nose plier, etc.

(2) Picture element adjustment
(Convergence adjustment)

– Superimposing pictures on R and B panels with a picture on G panel.

1. Loosen the upper and lower L adjusting screws fixing the panel.
2. Shift the XY shifting plate by holding its upper portion with fingers or a long-nose plier, etc. and adjust to superimpose the picture on the panel replaced on that of the G panel.

   For the relation between the picture and the XY shifting plate shifting directions, the picture shifts to the left when the XY shifting plate shifts to the left seeing from the incident side of the panel (the picture shifts to the right when the XY shifting plate shifts to the right direction.), and the picture shifts to the lower direction when the XY shifting plate shifts to the upper direction (the picture shifts to the upper direction, when the XY shifting plate shifts to the lower direction.).
3. Fix the panel by tightening the upper/lower L adjusting screws with a wrench for servicing. If a focus is upset when fixing the panel, loosen the upper/lower L adjusting screws and perform the step 2 again.
4. Repeat the steps 2 and 3 until the panel is fixed with the picture superimposed in the best condition.

< Holder fixing >

1. Apply screw lock to the S adjusting screws.
2. Fix the Z rotation plate and the holder support, and the Z rotation plate to the XY shifting plate by using a silicone bond at the appropriate locations.

3-14-2. Mirror Adjustment Procedures (After polarizing plate replacement)

1. Loosen screws fixing three mirror holder (WM, RM, BM).

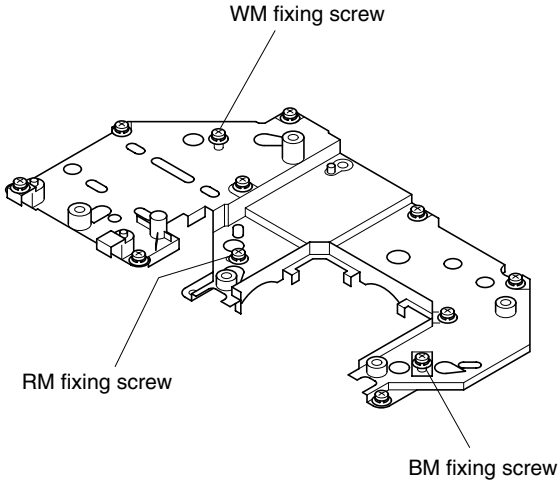

Fig. 1-3-18

2. Set G single color screen. Move the WM fixing screw along the long hole and fix it where the upper and lower edges of the screen does not show the dark band.
3. Set R single color screen. Fix the RM fixing screw in the same way as shown in step 2.
4. Set B single color screen. Fix BM fixing screw in the same way as shown in step 2.
5. Apply screw lock to each fixing screw. (For the screw lock position, refer to the figure shown below.)



Fig. 1-3-19

3-15. CAM SW PC Board (Only for TLP451/651)

1. Remove one screw (1) and remove the cover (2).
2. Remove four connectors (4) connected to the CAM SW PC board (3).
3. Remove two screws (5) and remove the CAM SW PC board (3).

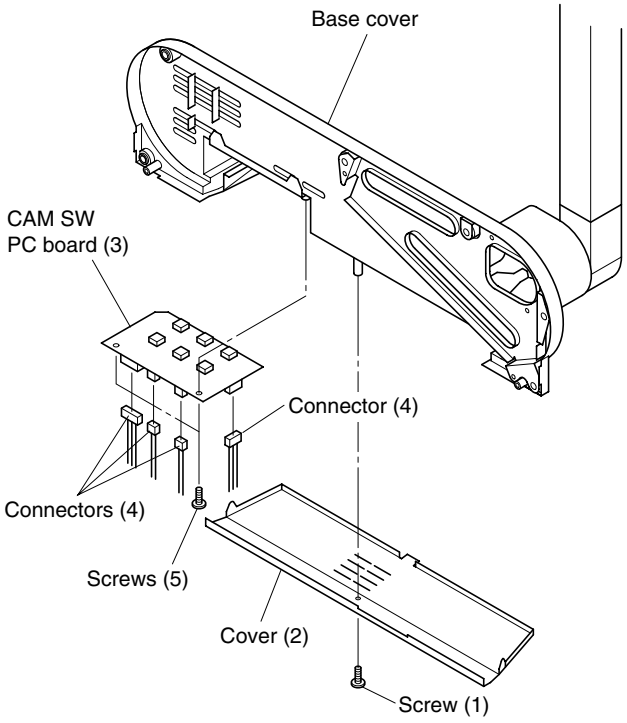

Fig. 1-3-20

3-16. Arm Assembly (Only for TLP451/651)

1. Remove three screws (1) and remove the arm assembly (2).
2. Pull out three connectors (3) connected from the arm assembly (2) from the base cover (4).

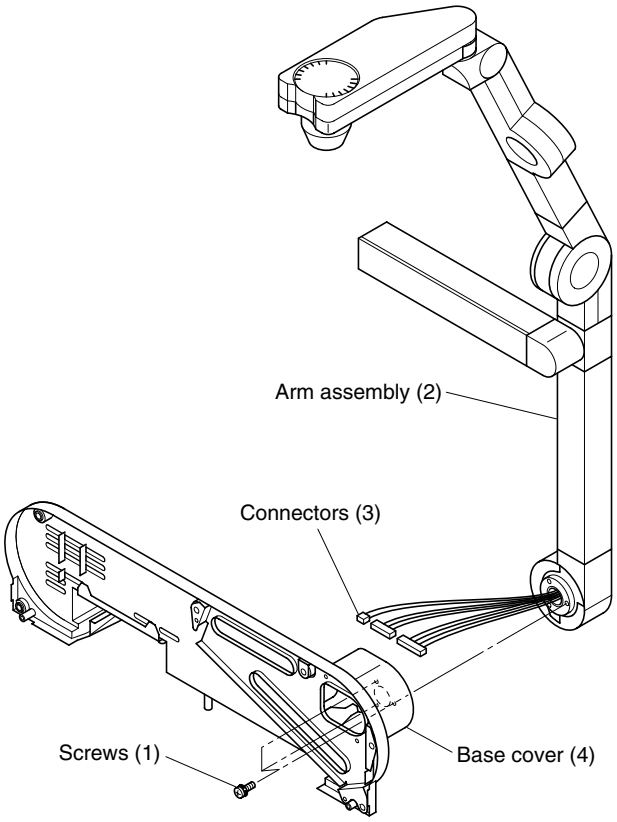

Fig. 1-3-21

3-17. Switch (Only for TLP451/651)

1. Remove two screws (1) and remove the base plate (2).
2. Remove one screw (3) and remove the switch (4).

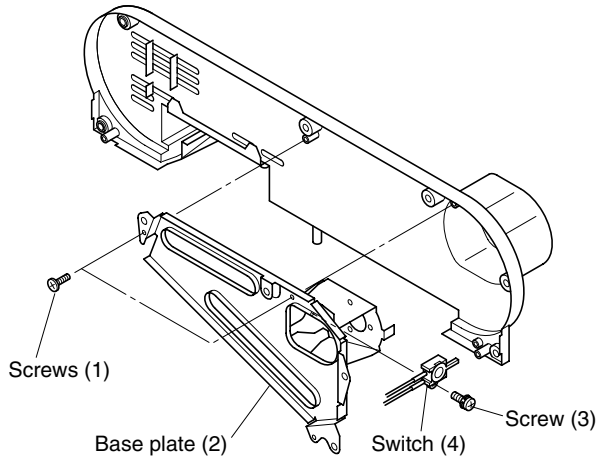

Fig. 1-3-22

3-18. Camera PC Board (Only for TLP451/651)

1. Remove four screws (1) and remove the cover (2).
2. Remove two connectors (3).
3. Remove two screws (4) and remove the camera block (5).
4. Remove the focus ring (6) by releasing the claws (A).
5. Remove two screws (7) and remove the camera base (9) from the camera PC board assembly (8).

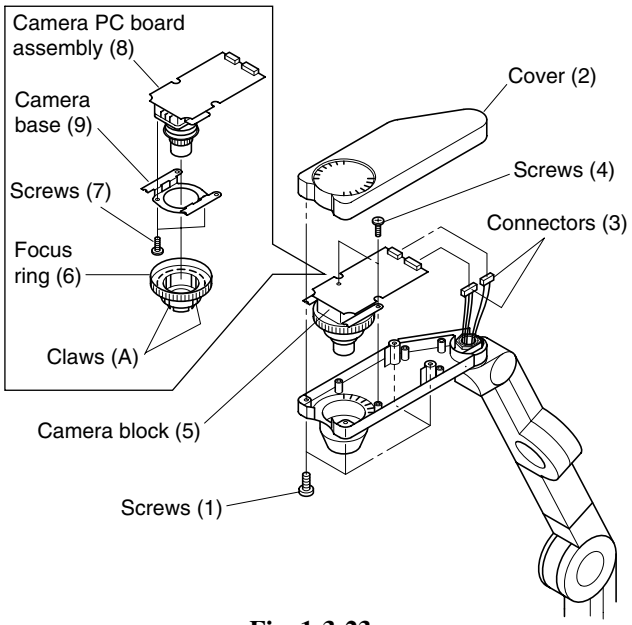

Fig. 1-3-23

3-19. Lamp PC Board (TLP451/651)

1. Remove the lamp cover (1).
2. Pull out the lamp PC board (2) in the arrow direction.
3. Unplug the connector (3).

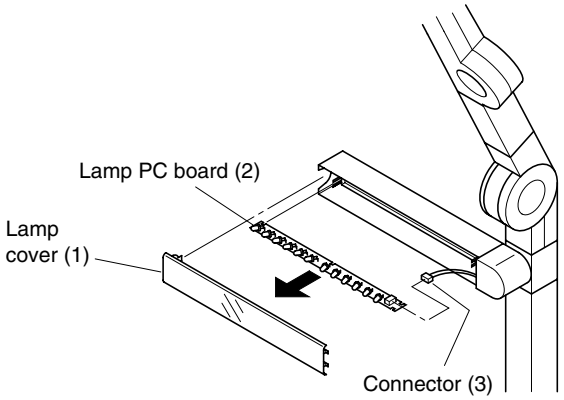

Fig. 1-3-24

4. ELECTRICAL ADJUSTMENT

< Test Equipments and Test Jigs >

- Oscilloscope
- Digital voltmeter
- Adjustment software TLP65CTLS.EXE
- Color luminance meter (BM-5)
- Personal computer
- Signal generator
- Multi-point luminance meter

< Connection and Setting of Personal Computer >

(1) Connection of personal computer

1) Connect a computer as shown in Fig. 1-4-1, and then perform the adjustment using the adjustment software TLP65CTLS.EXE. (When using a drive C, type C: ¥TLP65CTLS.EXE and press enter key.)

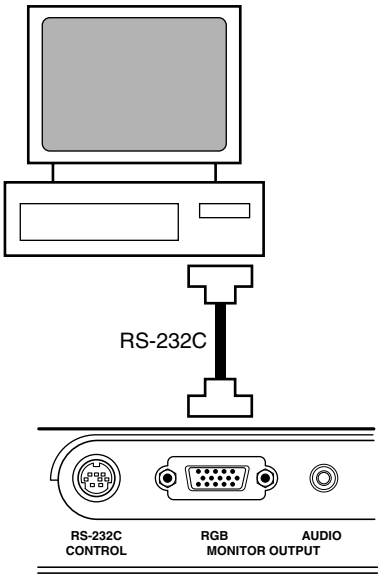

Fig.1-4-1

(2) Adjustment software usage

The electrical adjustment is carried out by using the adjustment software. For the adjustment command items in the adjustment procedures, set the command by referring the following contents.

First, start the software and select the "Drive" tab. Then the following display appears.

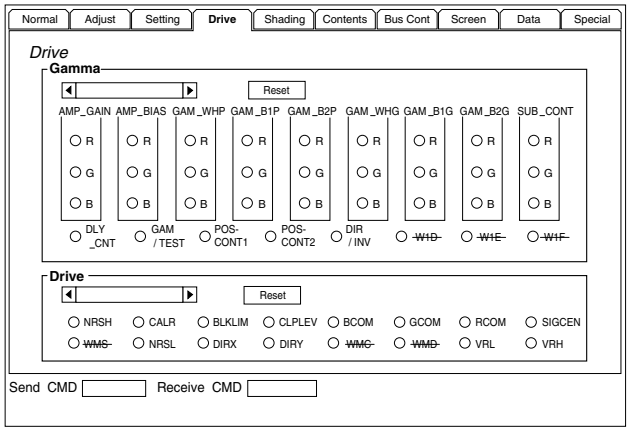

Fig. 1-4-2

The adjustment command setting enables to be carried out by clicking radio button(s) on this screen. The following list shows the adjustment command setting. By referring to the list, set the adjustment command.

	AMP_GAIN	AMP_BIAS	GAM_WHP	GAM_B1P	GAM_B2P	GAM_WHG	GAM_B1G	GAM_B2G	SUB_CONT
R	W00	W03	W06	W09	W0C	W0F	W12	W15	VGR
G	W01	W04	W07	W0A	W0D	W10	W13	W16	VGG
B	W02	W05	W08	W0B	W0E	W11	W14	W17	VGB

DLY_CNT	GAM/TEST	POS_CONT1	POS_CONT2	DIR/INV
W18	W19	W1A	W1B	W1C

NRSH	CALR	BLKLIM	CLPLEV	BCOM	GCOM	RCOM	SIGCEN	NRSL	DIRX	DIRY
WM0	WM1	WM2	WM3	WM4	WM5	WM6	WM7	WM9	WMA	WMB

4-1. LCD Drive Adjustment

- Save the data in each step.

Table 1-4-1

( ) : confirmation only.

Adjust Items	Input Signal	Test Equip-ment	Test Point	Adjust mode	Adjust Value	Note
1. Input level check						
1-1. Input level adjustment of RGB signals	16-stairstep waveform	Oscillo-scope	TP701 (R) TP702 (G) TP703 (B)	VGR VGG VGB	• 1.2V ± 20 mV between pedestal and white level of 16th stairstep waveform.	• RGB input. • Trigger the scope at TP901 (H period).
1-2. Input level adjustment of video signal	Gray scale or stairstep waveform	Oscillo-scope	TP701 TP702 TP703	VGR VGG VGB	• 1.15V ± 20 mV between pedestal and white peak level.	• Video input. • Trigger the scope at TP901 (H period).
1-3. Input level adjustment of Y/Pb/Pr signal	Gray scale or stairstep waveform	Oscillo-scope	TP701 (R) TP702 (G) TP703 (B)	VGR VGG VGB	• 1.15V ± 20 mV between pedestal and white peak level.	• Trigger the scope at TP901 (H period). • Select “Y/Pb/Pr” in “RGB input” on “Setting” menu of the adjustment software.
2. NRS adjustment						
2-1. Vertical stripe adjustment	Window signal with all white 50% in peripherals and all black at center.	Oscillo-scope	TP403 (R) TP503 (G) TP603 (B)	WM0	• Adjust so that the vertical stripe disappears. Adjust at TP503.	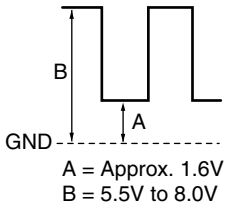 A = Approx. 1.6V B = 5.5V to 8.0V
2-2. NRS level confirmation	Window signal with all white 50% in peripherals and all black at center.	Oscillo-scope	TP403 (R) TP503 (G) TP603 (B)	(WM9)	• Confirm the base level of the amplitude should be approx. 1.6V.	
3. Center voltage adjustment	16-stairstep waveform	Oscillo-scope	TP402 (R) TP502 (G) TP602 (B)	WM7	• Adjust for A = B as shown in illustration right.	• Trigger the scope at TP901 (H period). 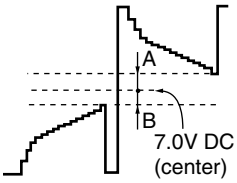
4. Gamma adjustment						
4-1. RGB bias adjustment	16-stairstep waveform	Oscillo-scope	TP402 (R) TP502 (G) TP602 (B)	W03 W04 W05	• Adjust the 16th stairstep wave-form for following values: 5.65 ± 20 mV	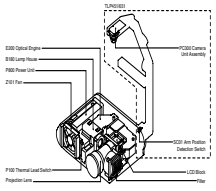 • Trigger the scope at TP901 (H period).
4-2. RGB black gamma adjustment	16-stairstep waveform	Oscillo-scope	TP402 (R) TP502 (G) TP602 (B)	W0C W0D W0E	• Adjust the 2nd stairstep wave-form for following values: 2.6V ± 20 mV	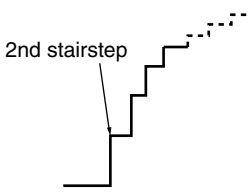
4-3. Ghost adjustment	SMPTE signal	——	——	(W1A)	• If ghost is high, adjust in W1A mode.	

Table 1-4-2

Adjust Items	Input Signal	Test Equip-ment	Test Point	Adjust mode	Adjust Value	Note
5. Gamma correction at video input						
5-1. Video bias adjustment	10-stairstep waveform	Oscillo-scope	TP402 (R) TP502 (G) TP602 (B)	W03 W04 W05	• Adjust the 10th stairstep wave-form for following values: 5.3 ± 20 mV	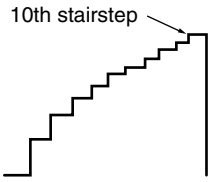 • Trigger the scope at TP901 (H period).
5-2. Video black gamma adjustment	10-stairstep waveform	Oscillo-scope	TP402 (R) TP502 (G) TP602 (B)	W0C W0D W0E	• Adjust the second stairstep wave-form for following values: 2.75 ± 20 mV	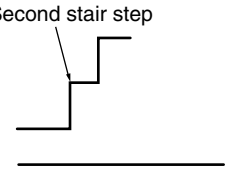 • Trigger the scope at TP901 (H period).
5-3. Ghost adjustment	Retma signal	——	——	(W1A)	• If ghost is high, adjust in W1A mode.	
6. Common voltage adjustment						
6-1. Common voltage adjustment 1	Adjustment signal	Oscillo-scope, confirm on the screen.	——	WM4 WM5 WM6	• Select “Standard” in Projection mode on “Setting” menu. • Adjust so that the flicker for each R, G, B signal becomes minimum.	
6-2. Common voltage adjustment 2	Adjustment signal	Oscillo-scope, confirm on the screen.	——	WM4 WM5 WM6	• Invert Up/Down contents displayed on the screen. • Select “Rear Ceiling” in Projection mode on “Setting” menu. • Adjust so that the flicker for each R, G, B signal becomes minimum. • After adjustment, click the standard button (PJ0) on the setting screen and return to the standard status.	

Table 1-4-3

Adjust Items	Input Signal	Test Equip-ment	Test Point	Adjust mode	Adjust Value	Note
7. White balance adjustment	All white 50% signal 10-stairstep video signal 16-stairstep RGB signal	Color lumi-nance meter (BM-5)	Shown below	W03 W04 W05	• Shown below.	
	1. Lay the unit in a dark room and input all white 50% signal, video 10-stairstep signal or RGB 16-stairstep signal. 2. Affix the standard white board WS-2 on the top center of screen, or suspend it adjacent to the screen from above. 3. Set the color luminance meter (BM-5) with more than 30 min. heat-run operation performed, so that color temperature on the WS-2 can be measured. 4. Measure the color temperature by using the BM-5 and adjust with W03 and W05 in the adjustment menu to obtain the value within the range of X = 0.285 ± 0.01 and Y = 0.310 ± 0.01. Adjustment standard a. Adjust Y by using in W05 mode. b. Adjust X by using in W03 mode. Color temperature: 8500 duv...less than 0.005 5. Input all white 100% signal. Measure the luminance and the color temperature and record them. 6. Perform the steps 1 to 4 for the video input. 7. Enter 16 steps at RGB input and 10 steps at Video input. Then check the color temperature on black side and adjust W0C and W0E if required. (Adjustment range should be within ±3 steps.)					
8. White level adjust-ment at RGB input	Window signal with center 98% and periph-eral 100%.	——	——	W03 W04 W05	• Adjust W03, W04 and W05 in the same way (modifying the same data amount) so that 98% white appears a little.	

• Perform the following adjustment when replacing the main PC board (PB9061) and/or the microprocessor QXXX.

Table 1-4-4

Adjust Items	Input Signal	Test Equip-ment	Test Point	Adjust mode	Adjust Value	Note
9. Slantness sensor correction data setting	———	———	———	———	———	

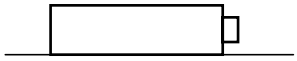

Fig. 1

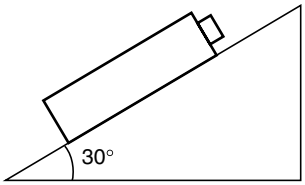

Fig. 2

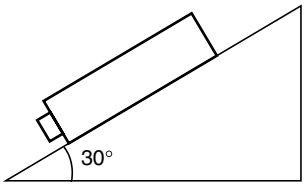

Fig. 3

1. Leave the unit for more than 3 hours to cool down enough.
2. Connect TLP450/451/650/651 to a personal computer by using a RS-232 cable. Set TLP450/451/650/651 in the standby status.
3. Start the slantness sensor correction data setting software (menu) on the personal computer.

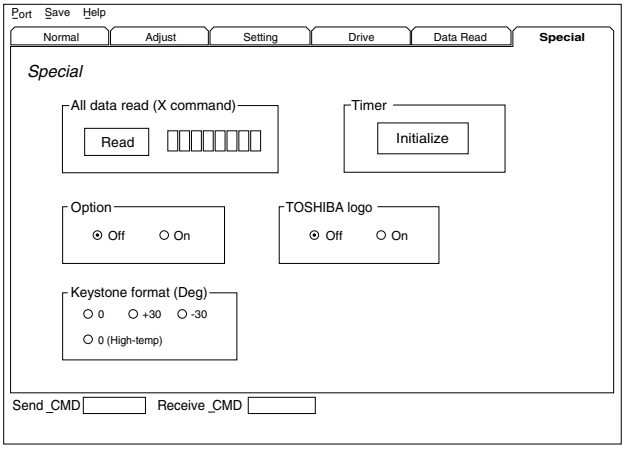

Fig. 4

4. Place TLP450/451/650/651 to be adjusted horizontally on a flat table and click “0” of keystone format (Deg) on the menu and store the data at the horizontal position. (Refer to Fig. 1.)
5. Place TLP450/451/650/651 to be adjusted on a table with 30 degrees slanted and its projection lens directed upward. Then click “+30” of keystone format (Deg) on the menu and store the data of +30 degrees position. (Refer to Fig. 2.)
6. Place TLP450/451/650/651 to be adjusted on a table with 30 degrees slanted and its projection lens directed downward. Then click “–30” of keystone format (Deg) on the menu and store the data of –30 degrees position (Refer to Fig. 3.). At this time, the data is written on the flash ROM of the TLP450/451/650/651.
7. After heat-running for more than 1 hour with the power turned on, place TLP450/451/650/651 horizontally and click “0 (High-temp)” of keystone format (Deg) to save the horizontal position data at high temperature.
8. Stretch the height adjusting legs on the front side of TLP450/451/650/651 fully, turn on the projector and start projecting on the screen.
   Adjust the focus roughly and push the automatic keystone button on the remote controller. Check to see the image projected is more rectangular with less trapezoidal in comparison with the shape before pushing the keystone button.

5. LED DISPLAY

X: Lighting off, Color: Contents shown by lighting in the color, (Color): Contents shown by blinking in the color

Table 1-5-1 Normal operation

Status	Power	Lamp	Temp	Contents	Remarks	Additional notice
Normal	Orange	X	X	Standby status	At normal power off	
Normal	Green	X	X	Power on	Various power on	
Normal	Green	(Green)	X	Lamp is heating up.	Lamp power is being confirmed.	
Normal	Green	Green	X	Lamp lighting	At normal power on	
Normal	Orange	Green	X	Power off	Various power off	
Normal	Orange	(Green)	X	Lamp is cooling down.	For approx. 1 min. (Impossible to light on again.)	

Table 1-5-2 Error operation

Status	Power	Lamp	Temp	Contents	Remarks	Additional notice
Error	Red	X	X	Main power error	Only at power on.	
Error	Red	Red	X	Lamp not lighting	Only at power on.	
Error	Red	Orange	X	Lamp fan stop	Only at power on.	Operation is carried out below 30 °C in the old control.
Error	Red	X	(Red)	Suction fan stop	Only at power on.	Operation is carried out below 30 °C in the old control.
Error	Red	X	(Orange)	Exhaust fan stop	Only at power on.	Operation is carried out below 30 °C in the old control.
Error	Red	X	(Green)	Filter open	Only at power on.	Not used in the current control.
Error	Red	X	Red	Temperature sensor 1 abnormality	Only at power on.	
Error	Red	X	Orange	Temperature sensor 2 abnormality	Only at power on.	

SECTION 2
SERVICING DIAGRAMS

1. PART CONFIGURATION AND THEIR SYMBOLS

1-1. Replacing Subminiature "CHIP" Parts

1-1-1. Required Tools:

1. Fine tipped, well insulated soldering “pencil”, about 30 Watts.
2. Tweezers.
3. Blower type hair dryer.

1-1-2. Soldering Cautions:

1. Do not apply heat for more than 3s.
2. Avoid using a rubbing stroke when soldering.
3. Discard removed chips; do no reuse them.
4. Supplementary cementing is not required.
5. Use care not to scratch or otherwise damage the chips.

1-1-3. Removal (Resistors, Capacitors, etc.):

1. Melt the solder at one side.

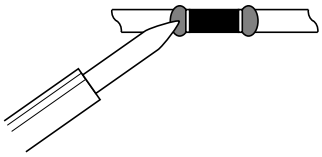

Fig. 2-1-1

2. Grasp the part with tweezers and melt the solder at the other side.

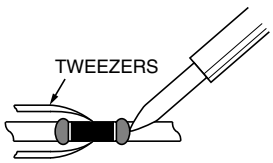

Fig. 2-1-2

3. Remove the part with a twisting motion.

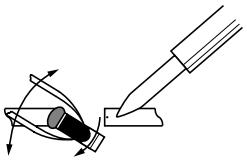

Fig. 2-1-3

1-1-4. Removal (Transistors, Diodes, etc.):

1. Melt the solder of one lead.

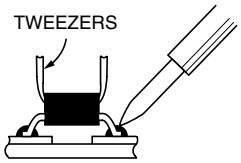

Fig. 2-1-4

2. Lift the side of that lead upward.

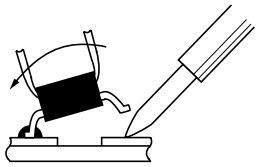

Fig. 2-1-5

3. Simultaneously heat solder the two remaining leads and lift part to remove.

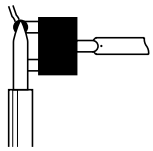

Fig. 2-1-6

1-1-5. Preheating (Except for semiconductors):

Immediately before installing new resistors or capacitors, use a blower type hair dryer and preheat the part for about two min. at approximately 150°C.

1-1-6. Replacement:

1. Presolder the contact points of the circuit pattern.

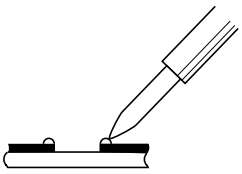

Fig. 2-1-7

2. Press the part downward with tweezers and apply the soldering pencil as indicated in the figure.

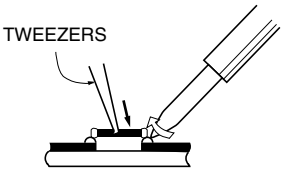

Fig. 2-1-8

1-2. Precautions for Part Replacement

- In the schematic diagram, parts marked ⚠ (ex. ⚠ F801) are critical part to meet the safety regulations, so always use the parts bearing specified part codes (SN) when replacing them.
- Using the parts other than those specified shall violate the regulations, and may cause troubles such as operation failures, fire etc.

1-3. Solid Resistor Indication

Unit	None ..... Ω k ..... kΩ M ..... MΩ
Tolerance	None ..... ±5% B ..... ±0.1% C ..... ±0.25% D ..... ±0.5% F ..... ±1% G ..... ±2% K ..... ±10% M ..... ±20%
Rated Wattage	(1) Chip Parts None ..... 1/16W (2) Other Parts None ..... 1/6W Other than above, described in the Circuit Diagram.
Type	None ..... Carbon film S ..... Solid R ..... Oxide metal film W ..... Metal film W ..... Cement FR ..... Fusible

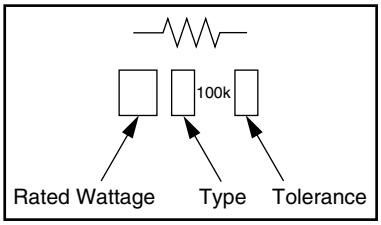

Fig. 2-1-9

1-4. Capacitance Indication

Symbol	⊣|⊢ ..... Electrolytic, Special electrolytic ⊣|⊢ NP ..... Non polarity electrolytic ⊣|⊢ ..... Ceramic, plastic ⊣|⊢ M ..... Film ⊣|⊢ ..... Trimmer
Unit	None ..... F μ ..... μF p ..... pF
Rated voltage	None ..... 50V For other than 50V and electrolytic capacitors, described in the Circuit Diagram.
Tolerance	(1) Ceramic, plastic, and film capacitors of which capacitance are more than 10 pF. None ..... ±5% or more B ..... ±0.1% C ..... ±0.25% D ..... ±0.5% F ..... ±1% G ..... ±2% (2) Ceramic, plastic, and film capacitors of which capacitance are 10 pF or less. None ..... more than ±5% pF B ..... ±0.1 pF C ..... ±0.25 pF (3) Electrolytic, Trimmer Tolerance is not described.
Temperature characteristic (Ceramic capacitor)	None ..... SL For others, temperature characteristics are described. (For capacitors of 0.01 μF and no indications are described as F.)

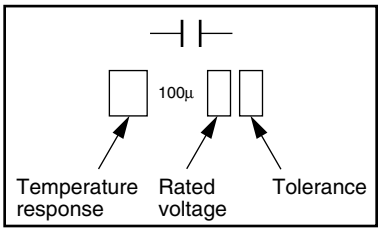

Fig. 2-1-10

1-5. Inductor Indication

Unit	None ..... H μ ..... μH m ..... mH
Tolerance	None ..... ±5% B ..... ±0.1% C ..... ±0.25% D ..... ±0.5% F ..... ±1% G ..... ±2% K ..... ±10% M ..... ±20%
Type	PL ..... Peaking For other, model name is described.

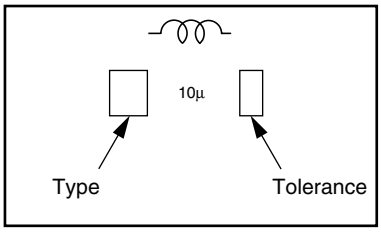

Fig. 2-1-11

1-6. Waveform and Voltage Measurement

- Measurement of waveform and voltage at each section in the color circuits was conducted with sufficient service color bar signal being received and reproduced in normal conditions.
- Waveforms and voltage values for the remaining circuit were measured with a broadcasting signal normally received, so they may vary slightly according to the programs being received. Use them as a measure for servicing.
- All voltage values except the waveforms are expressed in DC and measured by a digital voltmeter.

2. EACH SIGNAL FLOW

2-1. Operation at RGB Signal Input

The RGB signal is entered from PB001 on the RGB PC board and sent to the main PC board after passing through the MUTE circuit and the low pass circuit. The low pass circuit is provided to prevent a moire from occurring when the real sampling operation is not executed. Usually, a selector selects a signal not passed through the low pass filter, but selects the signal passed through the low pass filter since the real sampling is not carried out for a signal higher than SXGA85 Hz. The RGB signal entered passes through a buffer and develops PB003.

In the main PC board, the RGB input signal is converted to a digital signal in A/D+PLL (QD300). The A/D converter is used in the parallel mode, so the output becomes 16 bits per 1 channel and its clock rate is a half of the sampling clock. The digital RGB signal is enlarged or reduced by the scaller (QD500) and converted into a format of fv=60Hz, panel resolution (TLP65x: 1024 x 768, TLP45x: 800 x 600). The scaller output signal is a RGB signal of 10 bits per 1 channel, converted into the analog signal by the D/A converter and fed to the drive circuit. The scaller (QD500) also performs the contrast/brightness control and keystone correction in addition to the enlargement or reduction process for the video signal entered.

The clock signal for the input system is generated in the A/D+PLL (QD300) and that for LCD panel drive system is in the 2nd PLL (QD402) circuit.

In the drive circuit, the pre-driver circuit amplifies the signal and performs a gamma correction. The correction signal sent from the color uniformity correction IC (Q971) enters the BIAS control terminal of the pre-driver (Q701) and the color uniformity is corrected by entering the correction signal corresponding to the screen position of the input signal. The signal corrected in the gamma is inverted its polarity and sampled & held in six phase signals by the sample & hold IC (Q401, Q501, Q601) and then fed to the LCD panel. The XGA panel used for TLP650/651 employs 12 phase driving system, so two sample & hold ICs are used per one channel. (Since TLP450/451 employs 6 phase driving system, one sample & hold IC is used per one channel.)

The panel driving timing signal is generated in the timing generator IC (Q203) with a clock signal and HD/VD signal supplied from the digital circuit. The Up/Down and Left/Right display inversion on the LCD panel (for ceiling mounting and rear projection status) is carried out by changing the timing signal generated by the timing generator. The timing signal used for this LCD panel requires a 15V in the amplitude, so the signal is converted into the timing signal of 15V amplitude by the level shifter and drives the LCD panel. The drive circuit operation is carried out in the same way regardless of the kinds of input signals. So the operation description for other input signals is omitted.

2-2. Video Signal

The video signals, S-video and composite video signals, are sent to the main PC board in passing through the input PC board through the connector and the buffers.

The signal sent to the main PC board enters the video decoder IC (QD200) and the decoder develops 8 bit signal (27 MHz clock) multiplexed with the Y/Cb/Cr components. The signal switching between S-video and composite video signals is carried out by a selector built-in the video decoder. The Y/Cb/Cr signal input for the scaller IC are 8 bit Y signal + 8 bit Cb/Cr signal. The 8 bit Y/Cb/Cr signal (27 MHz) in QD405 is converted into a 16 bit Y signal + Cb/Cr signal (13.5 MHz) and enters the scaller IC. In the scaller IC, the digital matrix circuit converts the Y/Cb/Cr signal into the R/G/B signals.

After that, the signal process is carried out in the same way as those for the RGB signal input. That is, the key stone correction, enlargement/reduction process and contrast/brightness control are carried out and fed to the drive circuit.

The process relating to the sync is also carried by the video decoder IC and the clock signal for input system is also generated.

Furthermore, when the video signal of fv=50Hz, such as PAL signal, etc. enters, the panel drive operation is carried out by using the signal of fv=50Hz.

2-3. Operation at Y/Pb/Pr Signal and HDTV Signal Input

Y/Cb/Cr signal (DVD player output) or HDTV signal enters from PB001 and reaches the A/D converter (QD100) for Y/Cb/Cr (Y/Pb/Pr) signal after passing through the low pass circuit. The A/D converter develops 16 bit signal of 8bit Y signal + 8bit Cb/Cr (Pb/Pr) and enters the scaller IC through the selector for the signal and that from the video decoder inside QD405. The process following to the scaller IC is the same as that of the video signal process.

The process relating to the sync process at Y/Cb/Cr signal (DVD player output) input (clock generation) is carried out by the video decoder and the clock generation at HDTV signal input is by the A/D+PLL (QD300).

2-4. Camera Input Operation

A camera input enters the A/D converter for Y/Cb/Cr (Y/Pb/Pr) signal through an exclusive connector and is processed as a Y/Cb/Cr signal input. The camera signal is a Y/Cb/Cr signal of fh=11.8 kHz and fv=15 Hz.

The clock generation is carried out in the A/D+PLL (QD300).

2-5. Camera Overlay Signal

The camera overlay signal usually enters the A/D converter for Y/Cb/Cr signal (Y/Pb/Pr) through an exclusive connector in the same way as that of camera input.

The A/D converter output enters QD405 and the red and blue components of the signal are extracted by the level slice circuit. Thus processed signal is converted into the signal synchronizing with the LCD panel output timing by using a memory (QD46). Then the signal is overlapped with the on-screen signal and the signal overlapped is fed to the on-screen signal input of the scaller IC, and overlapped with the main video output signal. At this time, the clock generation for overlay signal input system is carried out by the PLL circuit exclusive for the overlay.

As described above, the A/D converter for Y/Cb/Cr (Y/Pb/Pr) signal is used for the overlay signal input, so the signal which is usually processed by the A/D converter for Y/Cb/Cr (Y/Pb/Pr) signal, that is, Y/Cb/Cr signal (DVD player output), cannot be overlaid at the HDTV signal input.

This page is not printed.

3. BLOCK DIAGRAMS

3-1. RGB Block Diagram

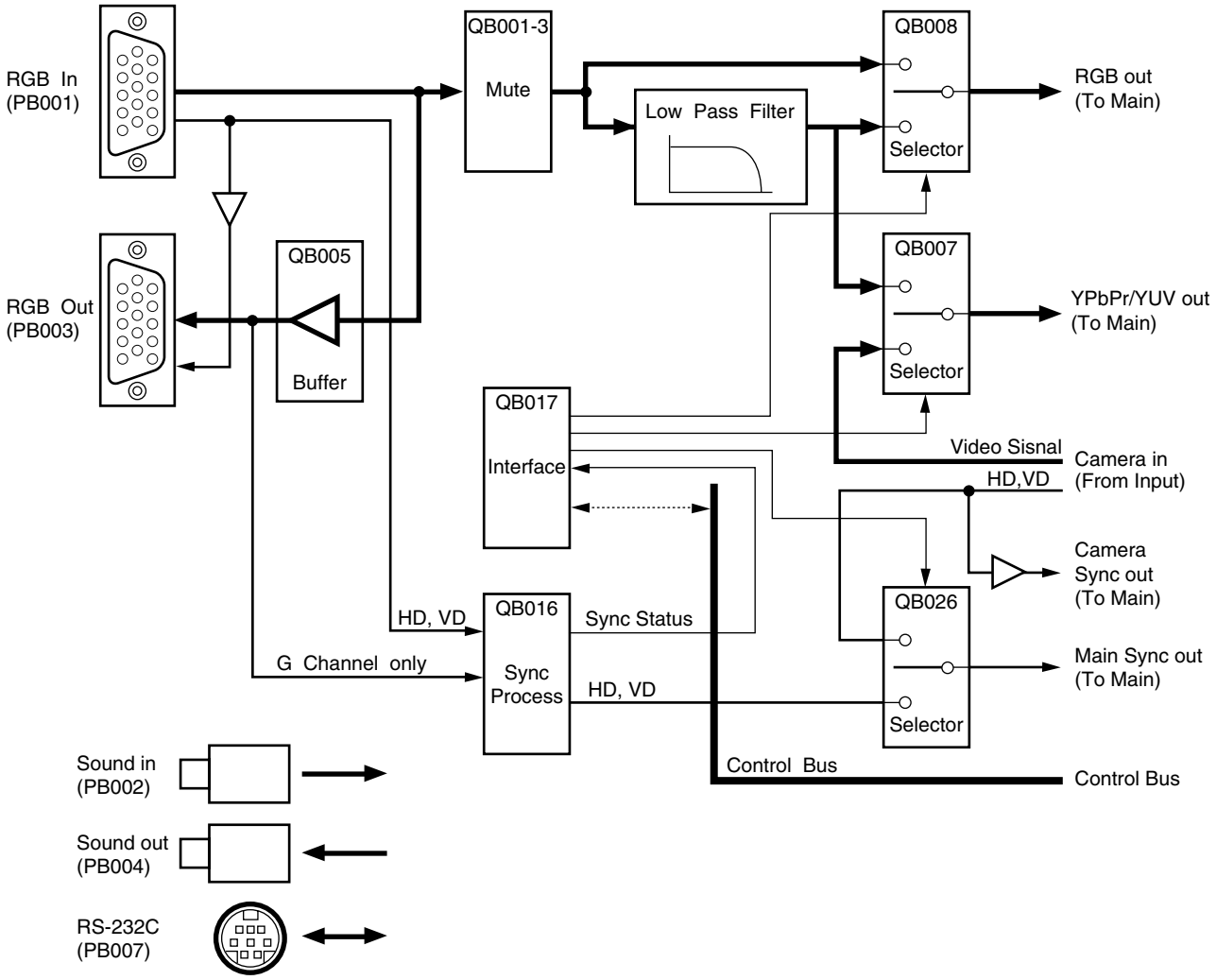

Fig. 2-3-1

3-2. Input Block Diagram

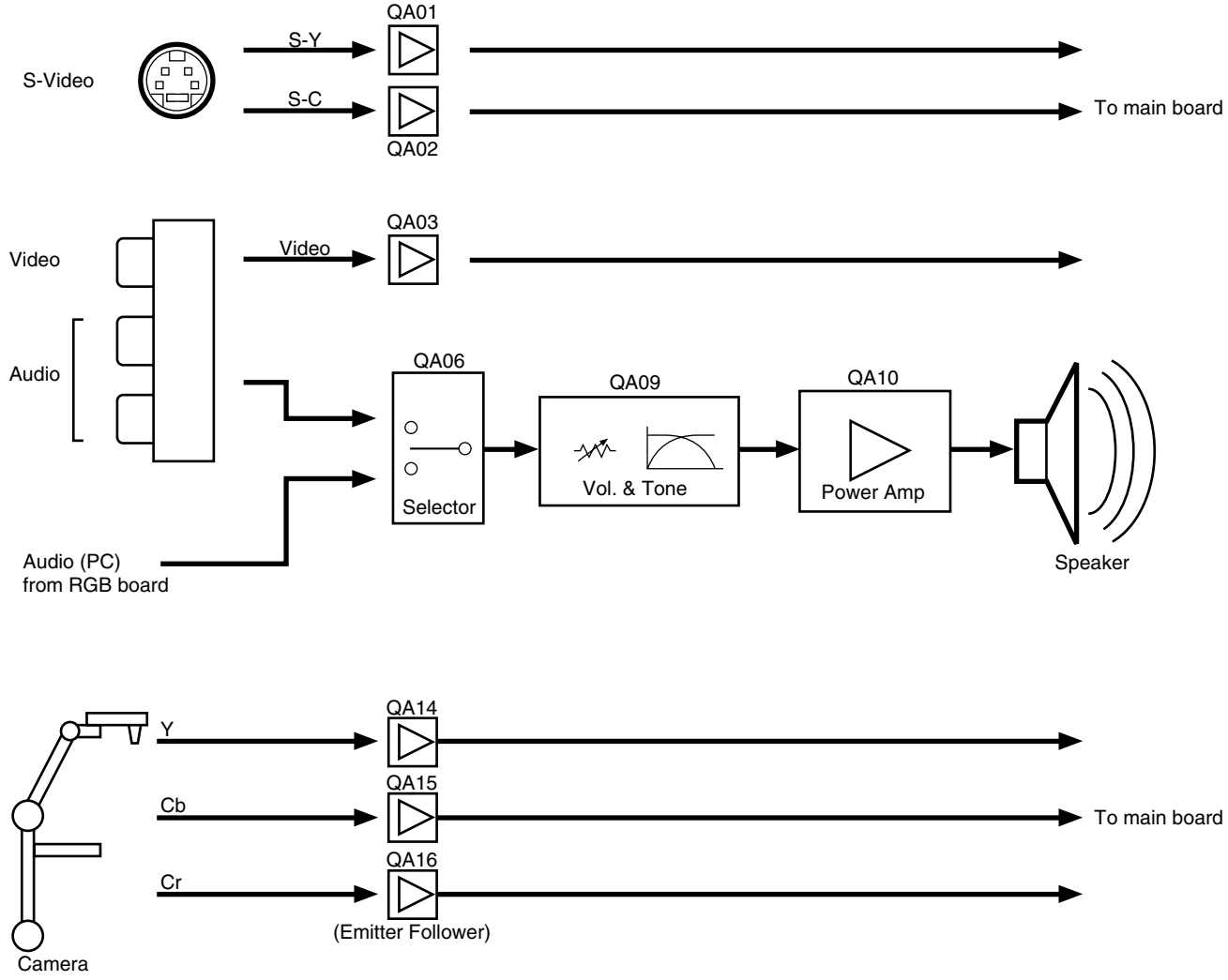

Fig. 2-3-2

3-3. Main Block Diagram

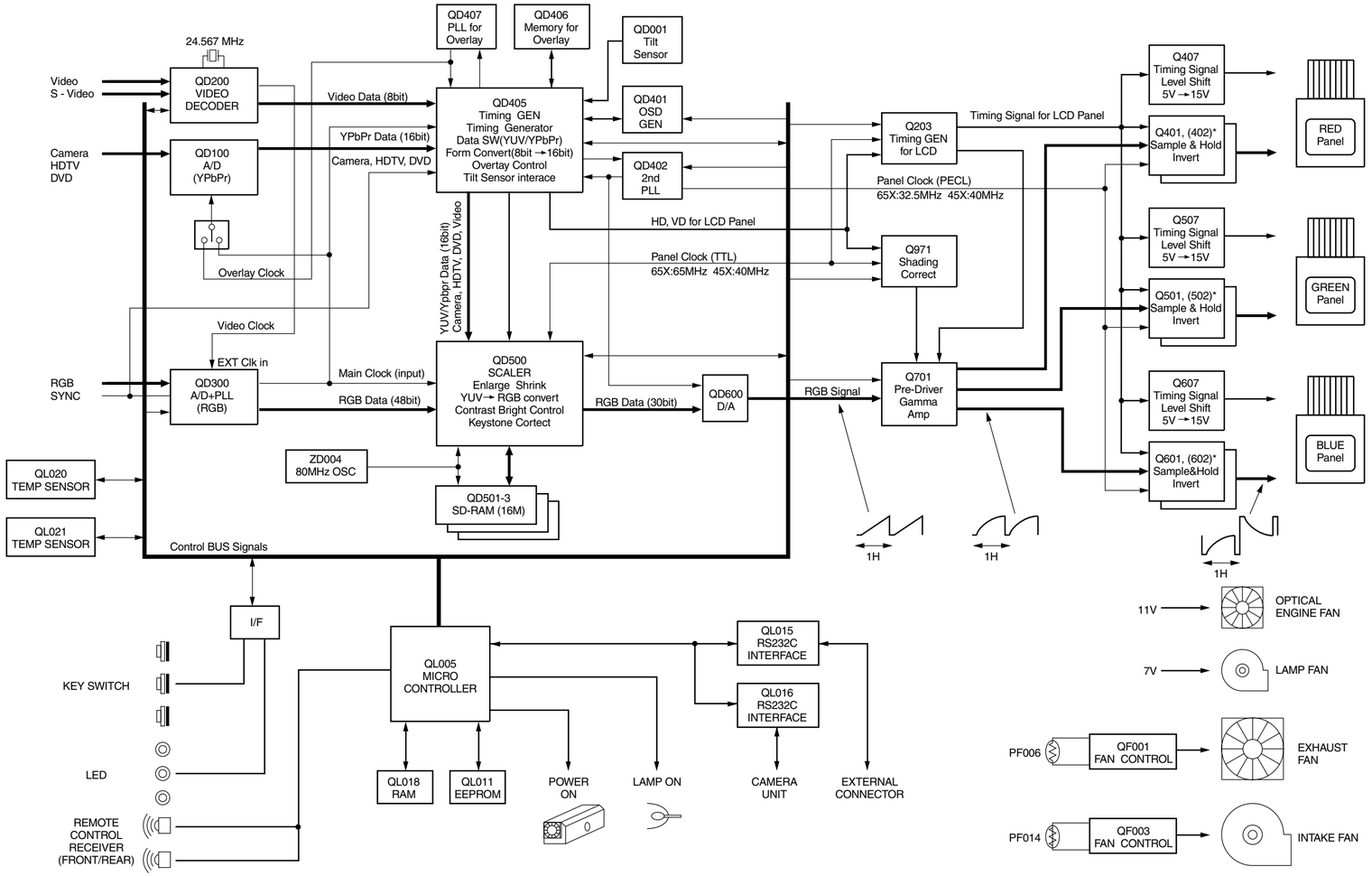

Fig. 2-3-3

3-3. Digital Block Diagram

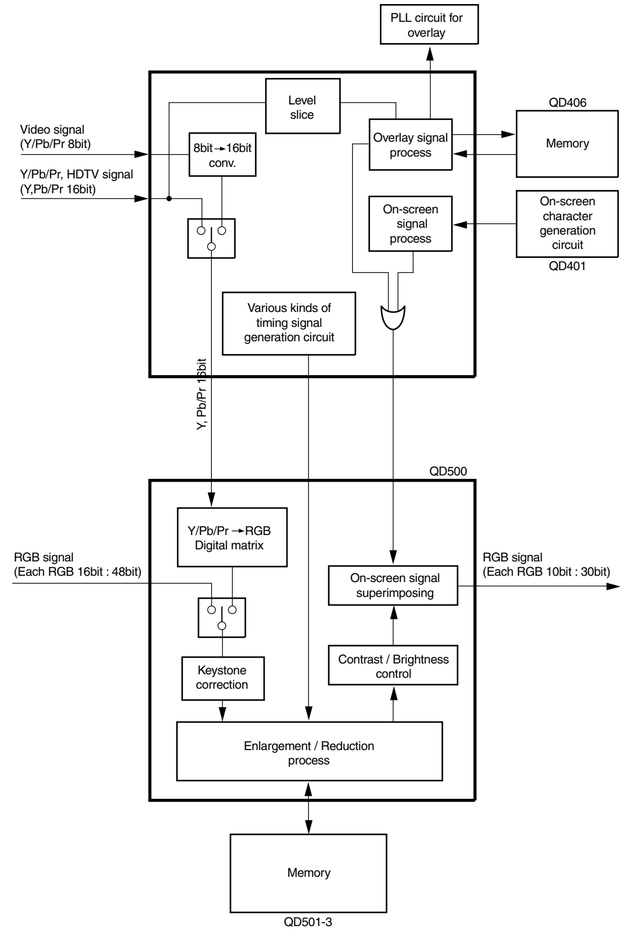

Fig. 2-3-4

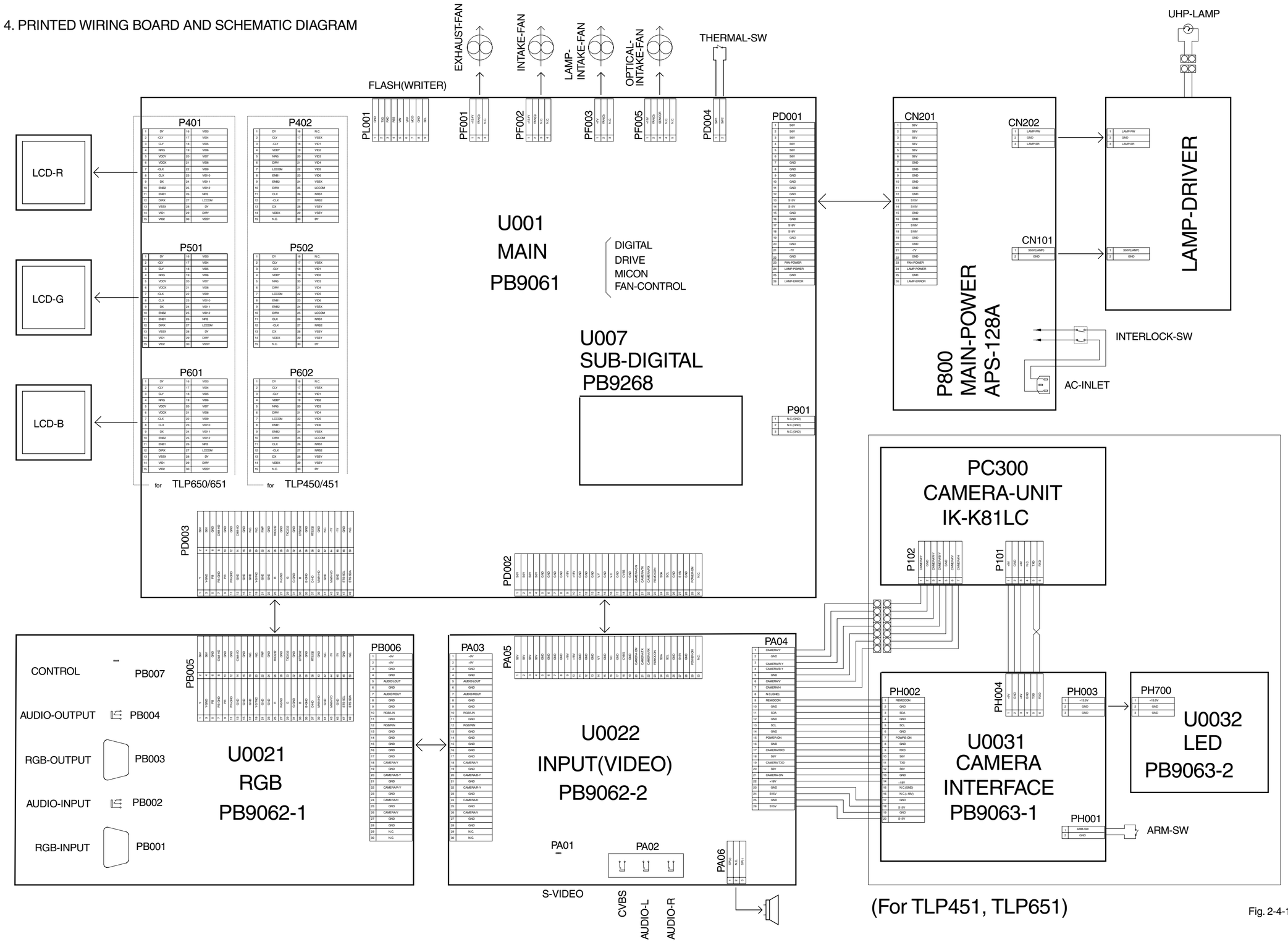

Fig. 2-4-1

TLP650 WIRING

5. CIRCUIT DIAGRAMS

5-1. Drive Circuit Diagram (for TLP650, TLP651)

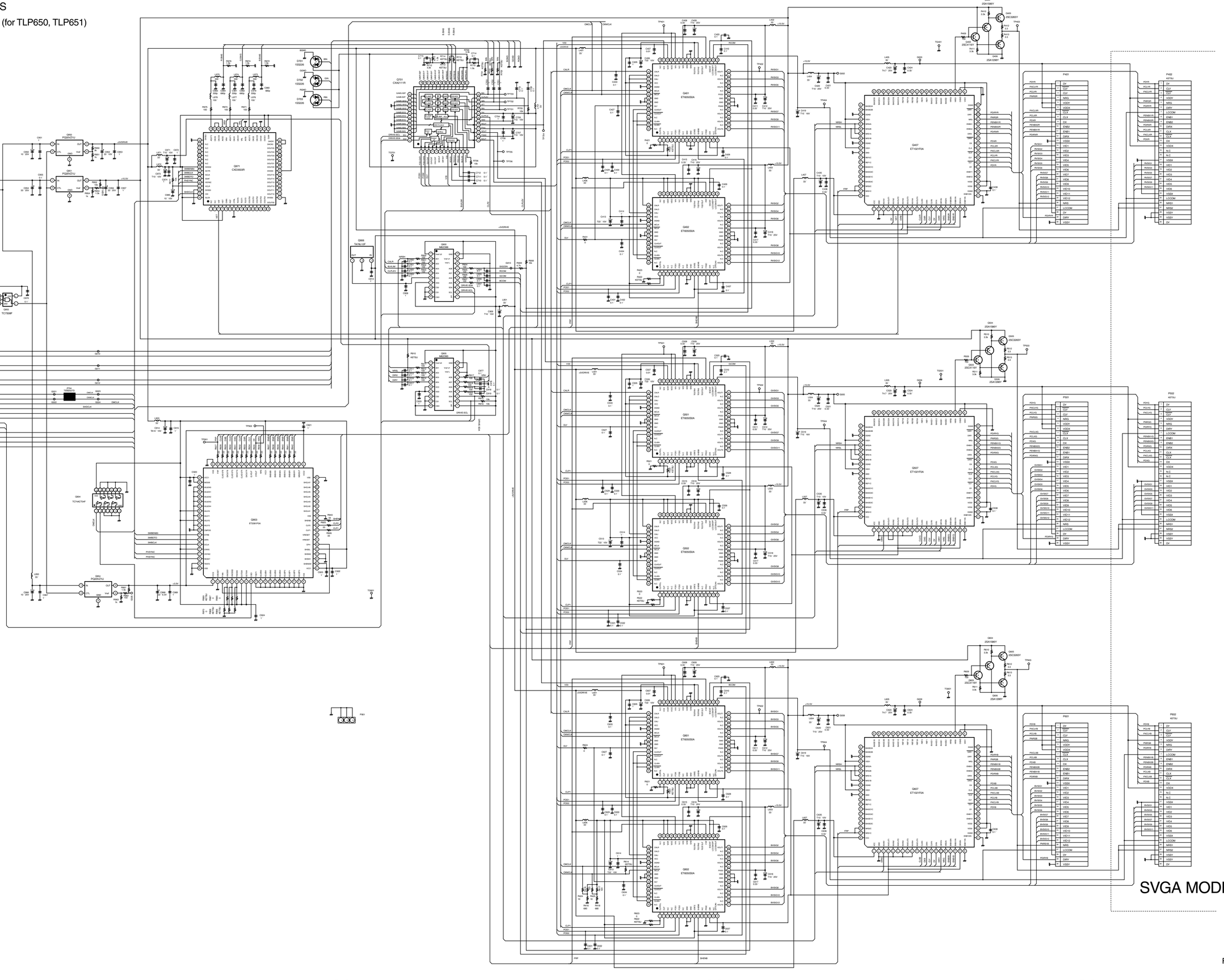

Fig. 2-5-1 TLP650 DRIVE CIRCUIT (650)

5-2. Drive Circuit Diagram (for TLP450, TLP451)

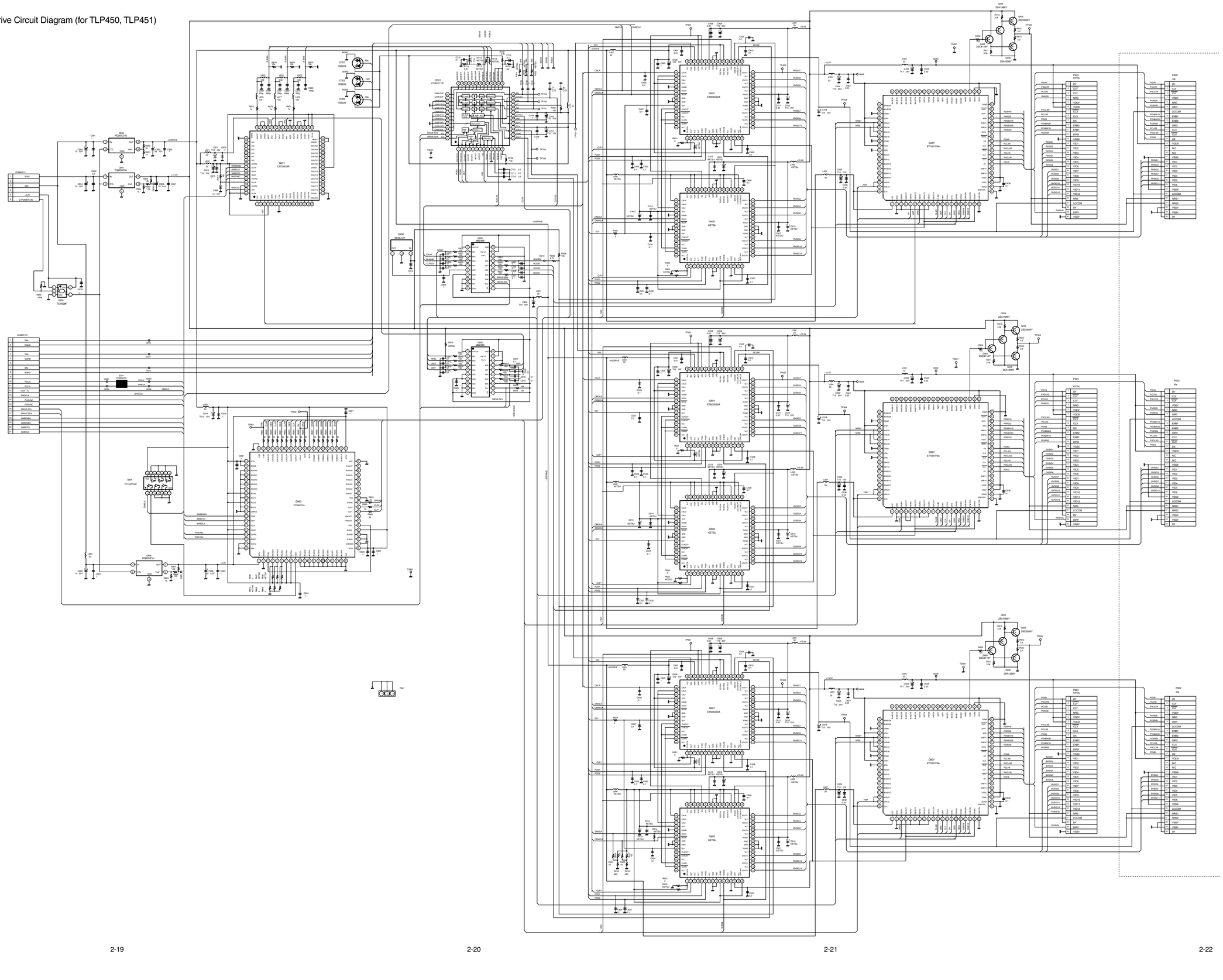

TLP650 DRIVE CIRCUIT (450)

Fig. 2-5-2

5-3. Main Circuit Diagram (TLP650, TLP651)

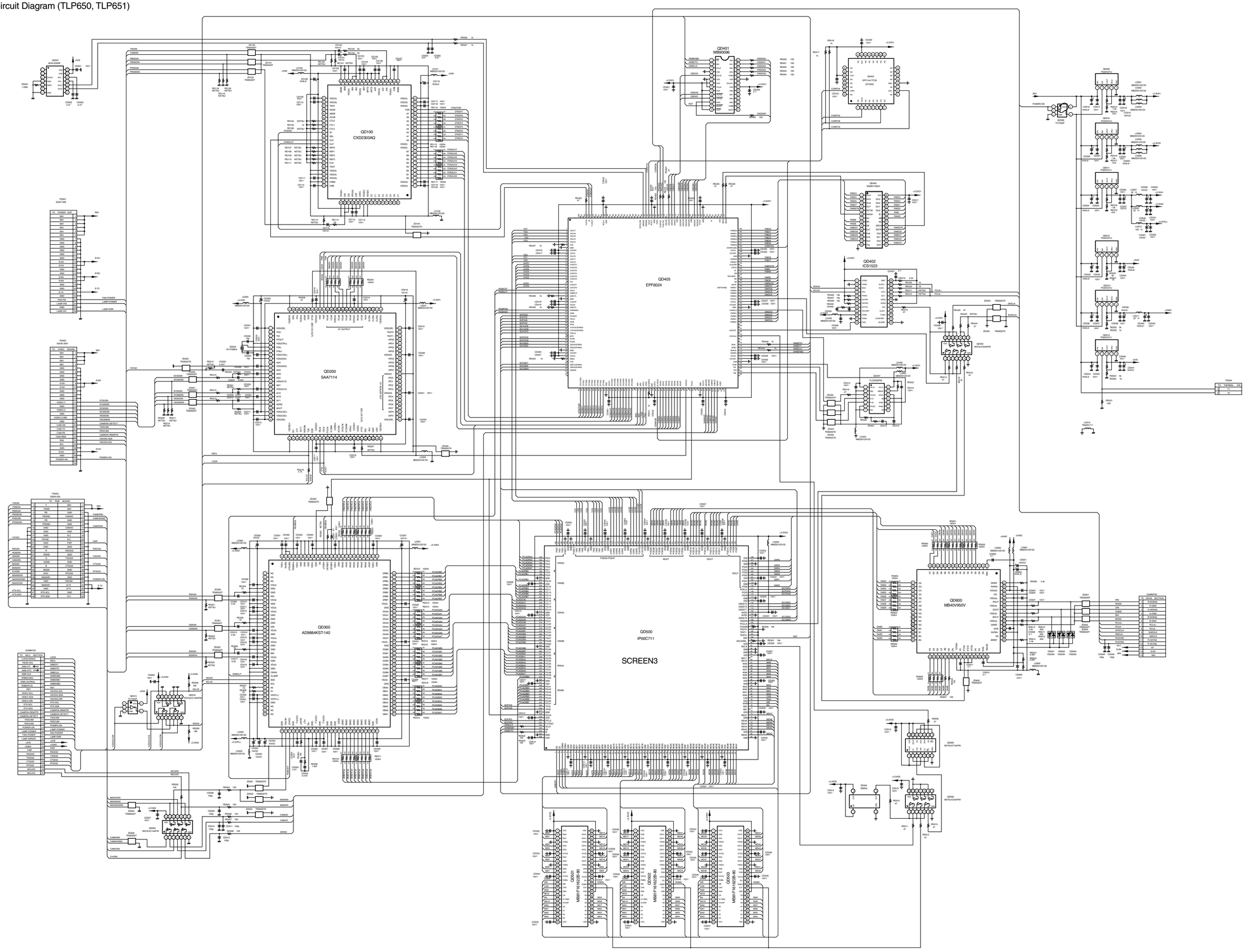

Fig. 2-5-3

TLP650 MAIN CIRCUIT (650)

5-4. Main Circuit Diagram (for TLP450, TLP451)

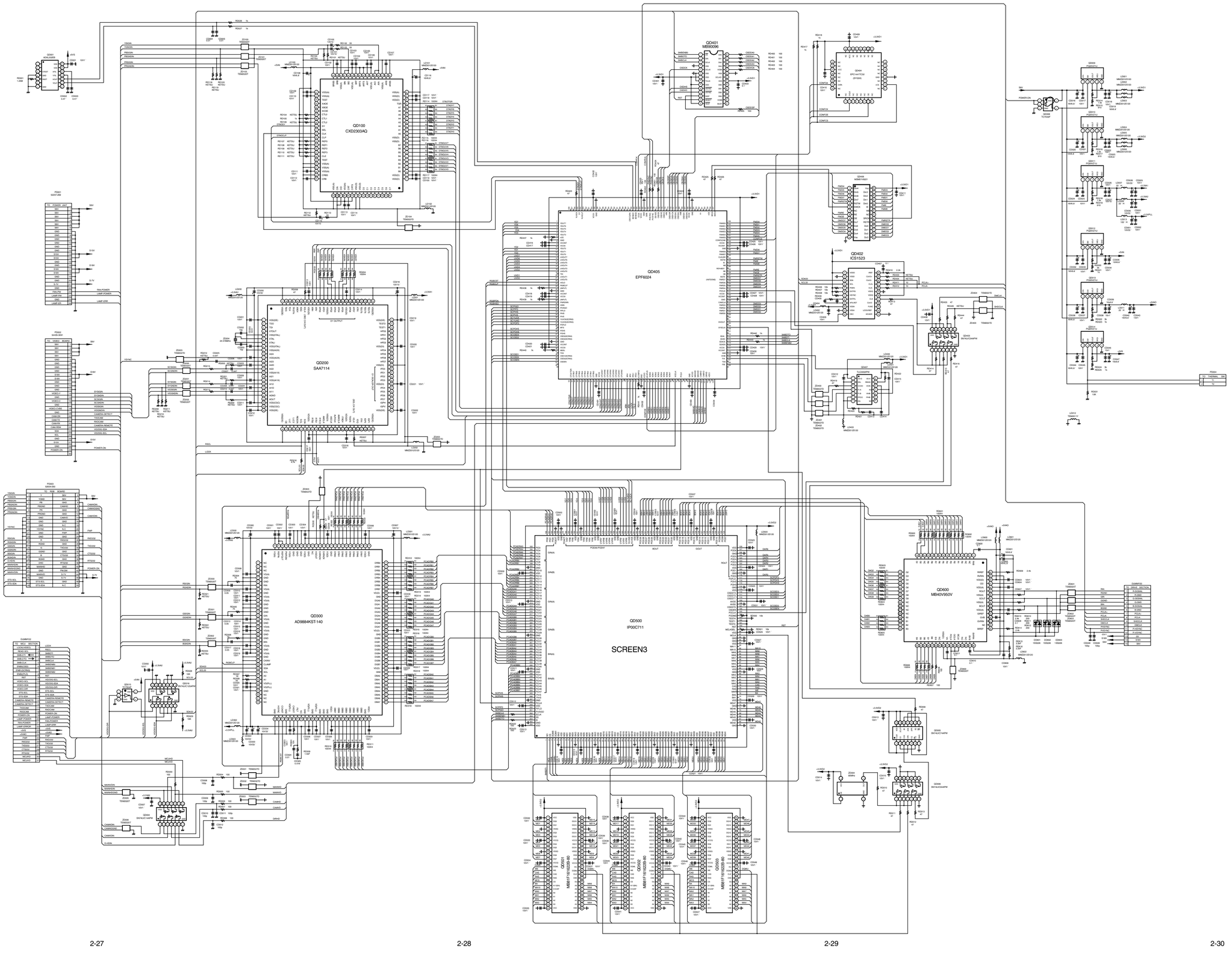

TLP650 MAINCIRCUIT (450)

Fig. 2-5-4

5-5. Micon Circuit Diagram

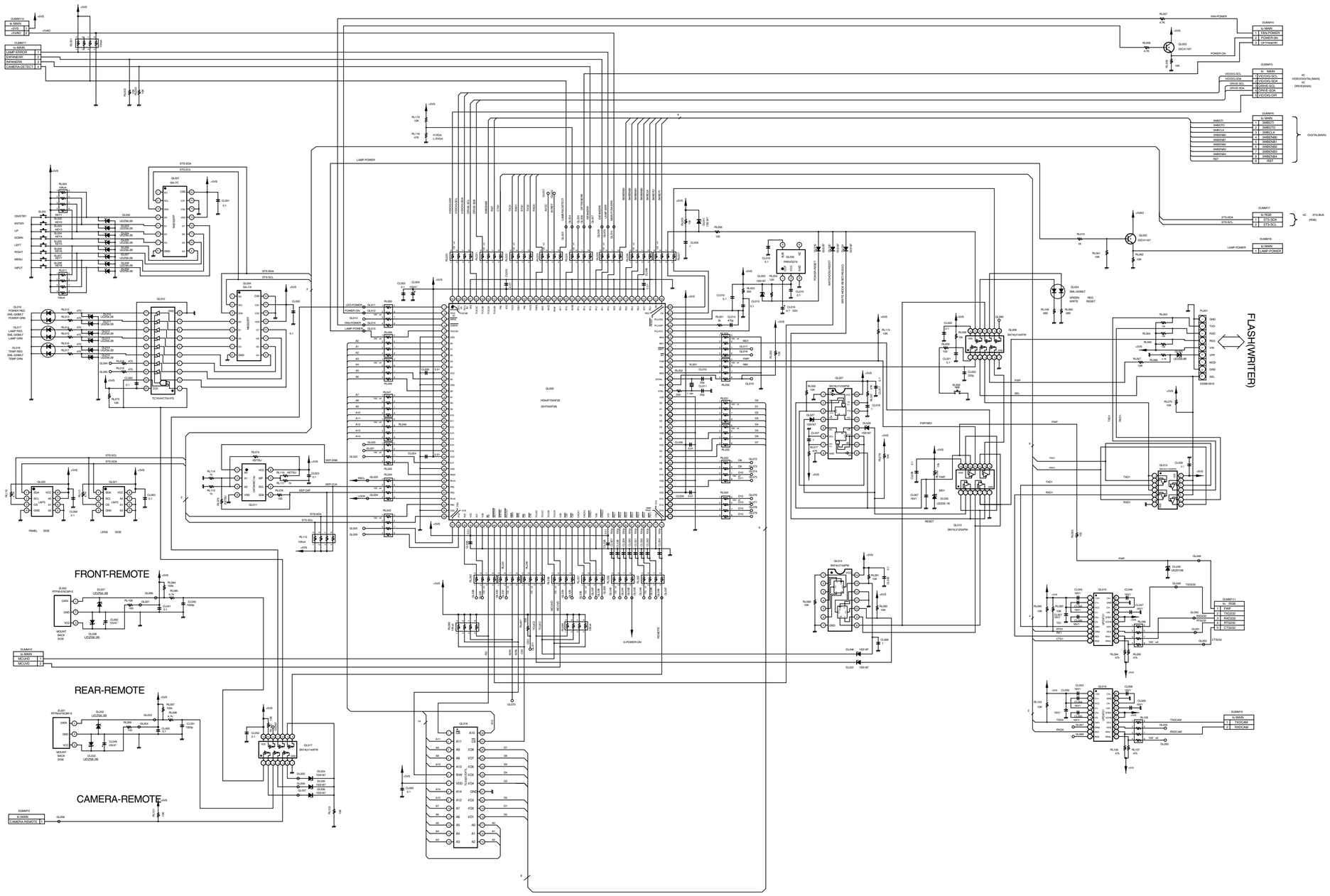

Fig. 2-5-5

5-6. RGB Circuit Diagram

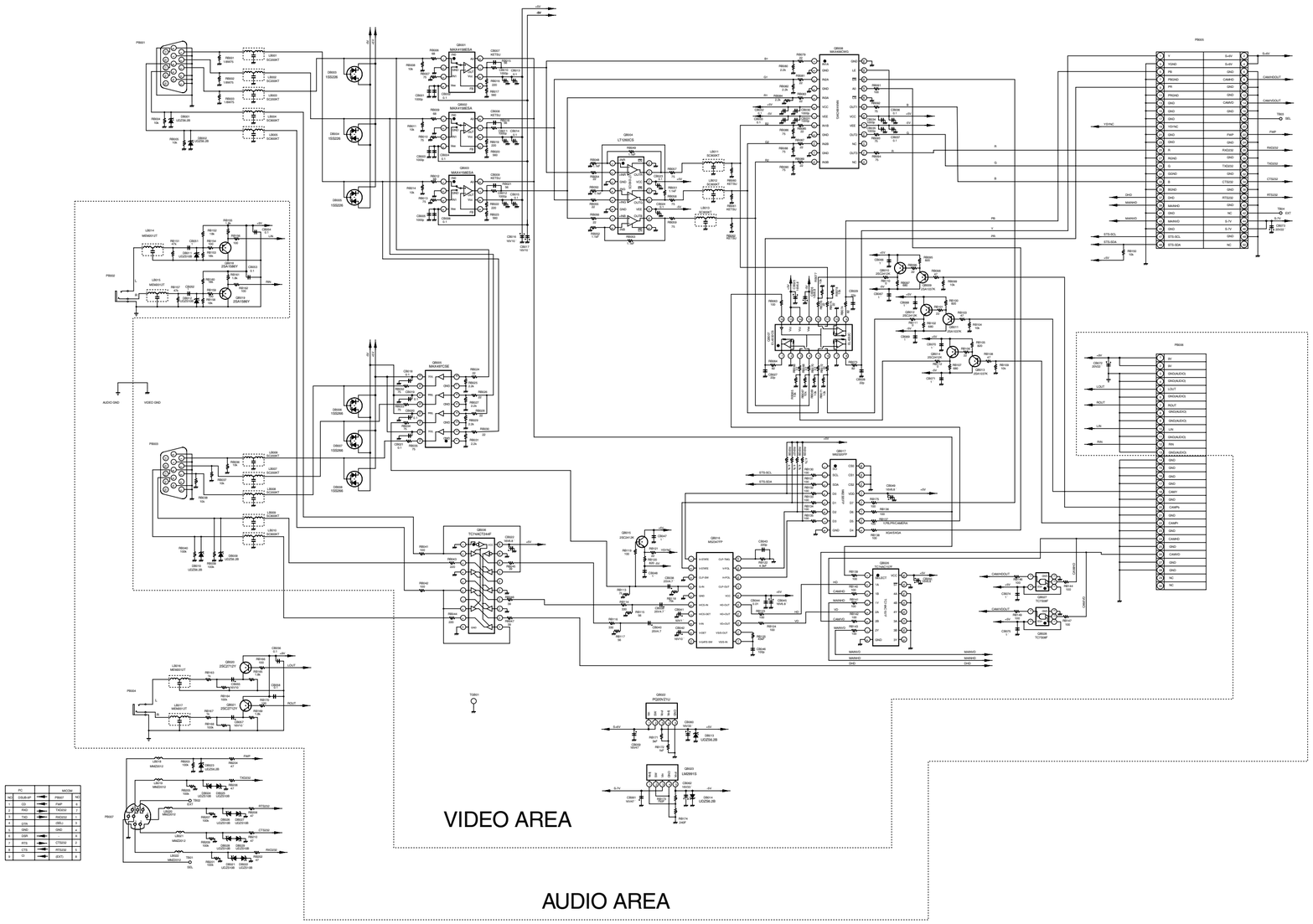

Fig. 2-5-6

5-7. Input Circuit Diagram

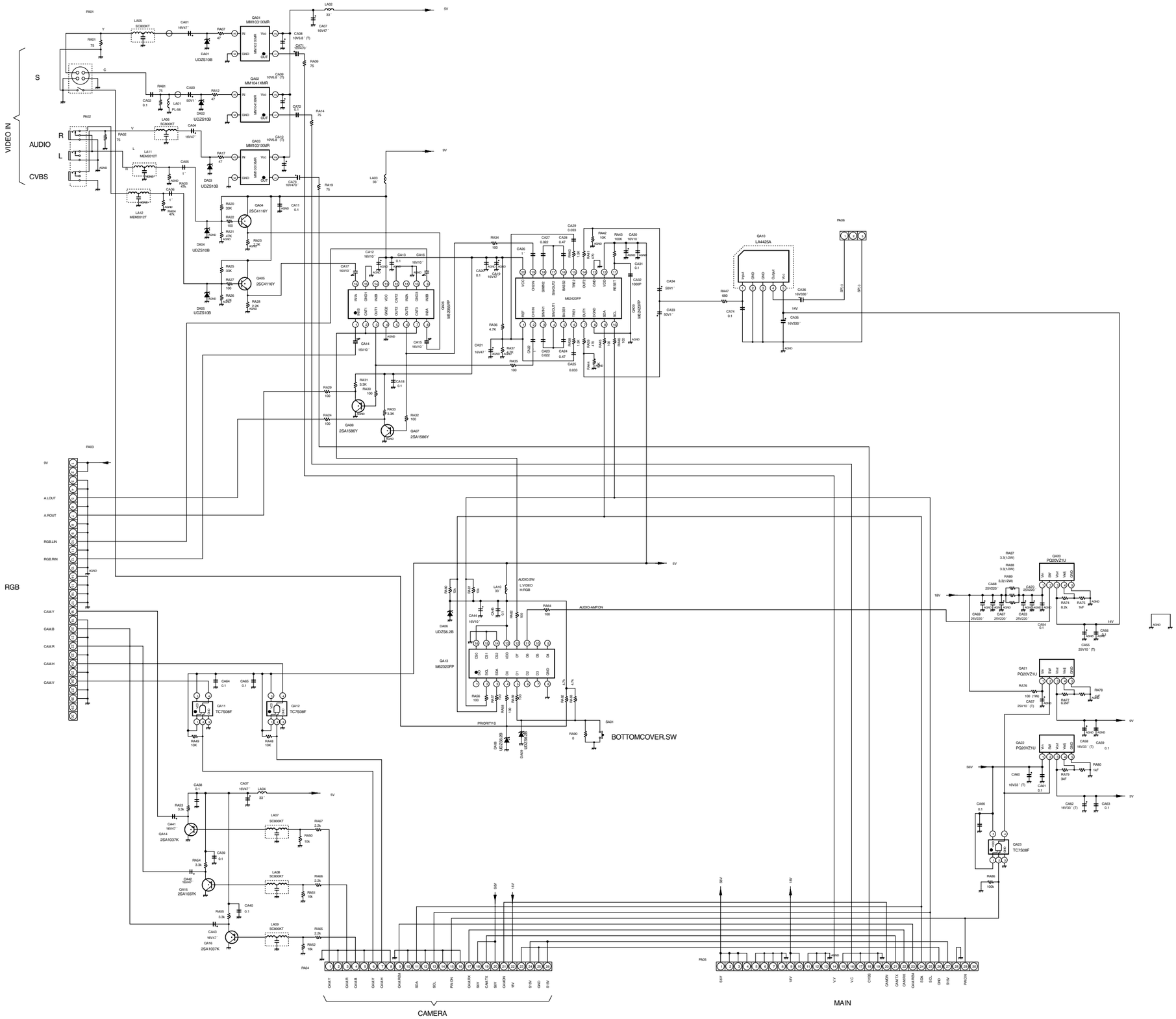

Fig. 2-5-7

5-9. Camera Interface Circuit Diagram

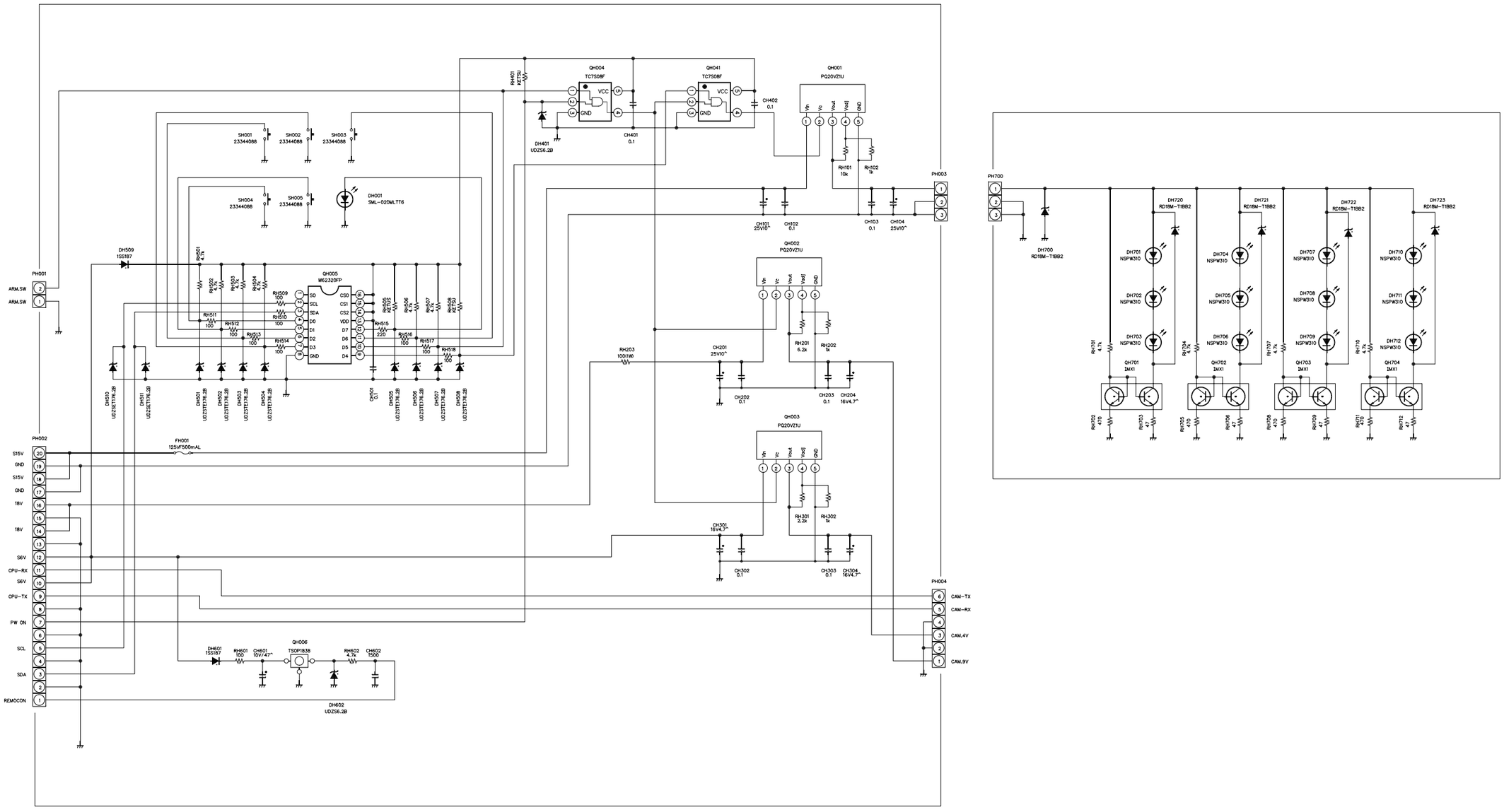

Fig. 2-5-9

5-10. FAN Control Circuit Diagram

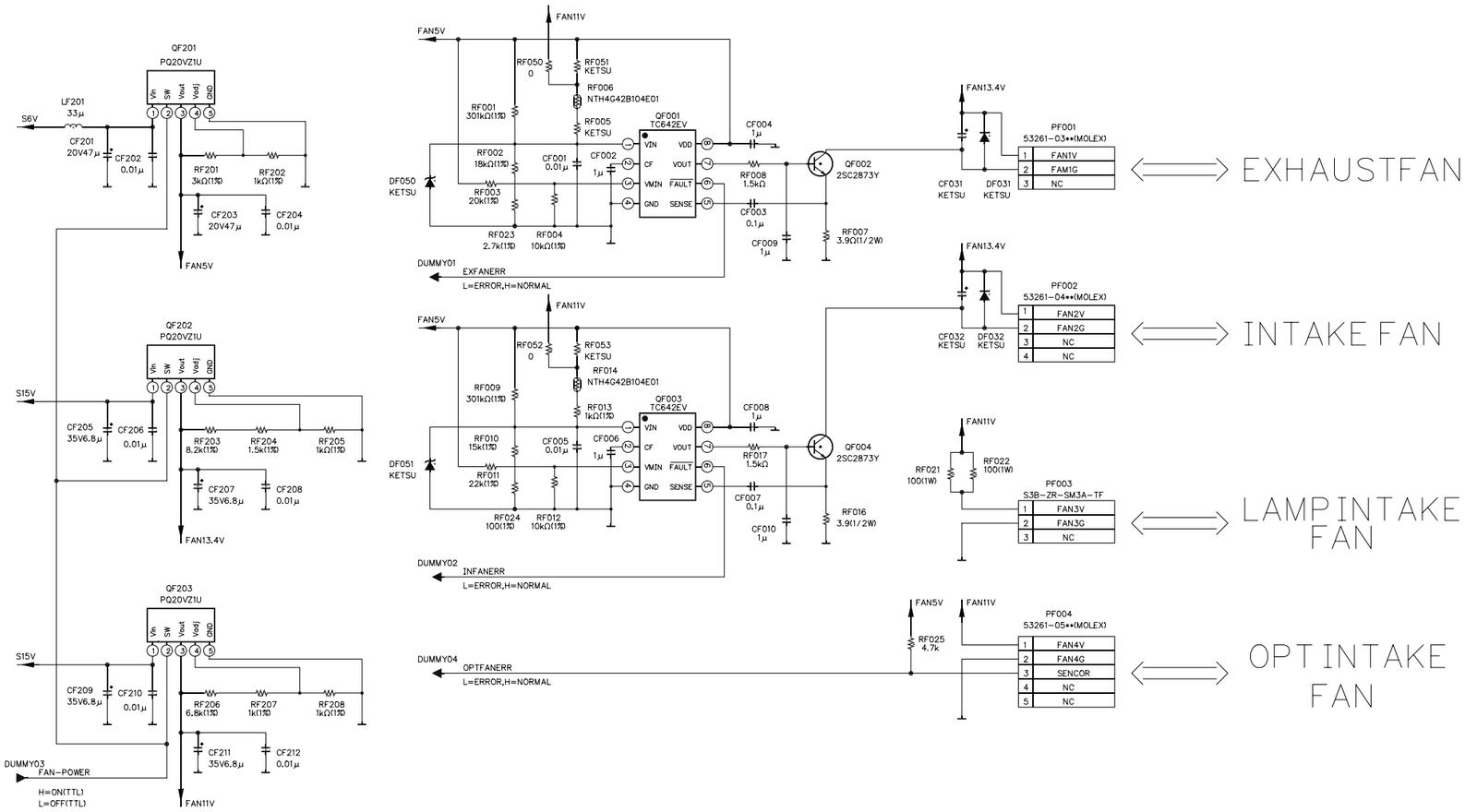

Fig. 2-5-10

6. PC BOARDS

6-1. Input PC Board

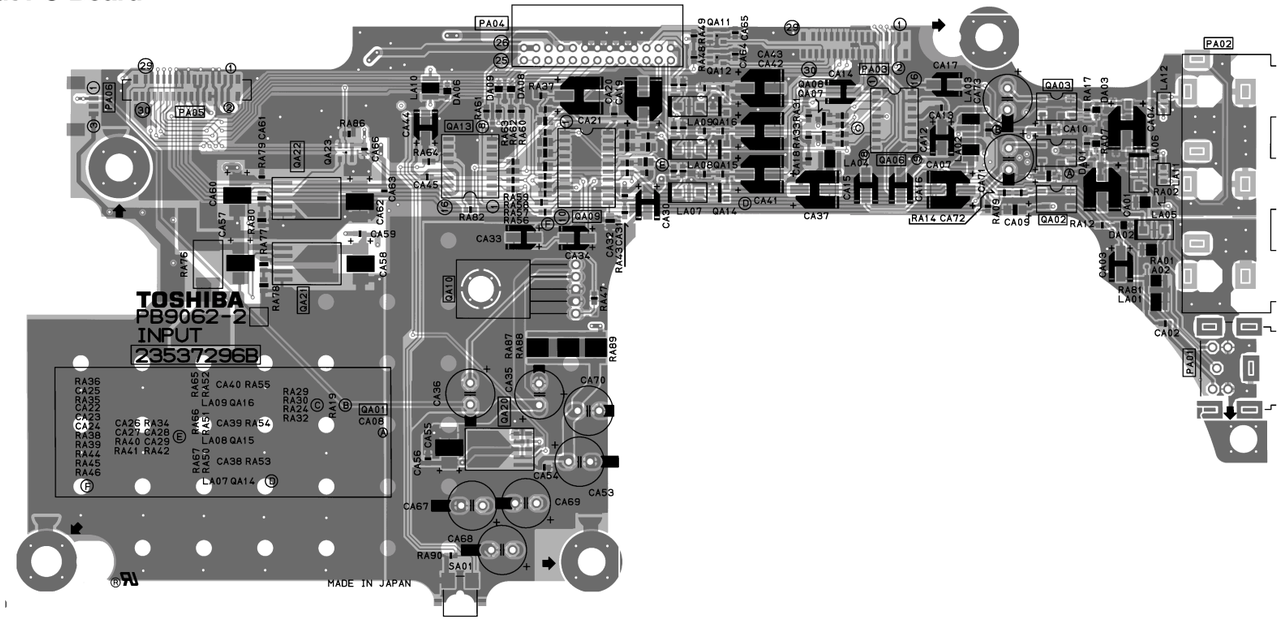

Fig. 2-6-1 U0022 Input PC Board (Top Side)

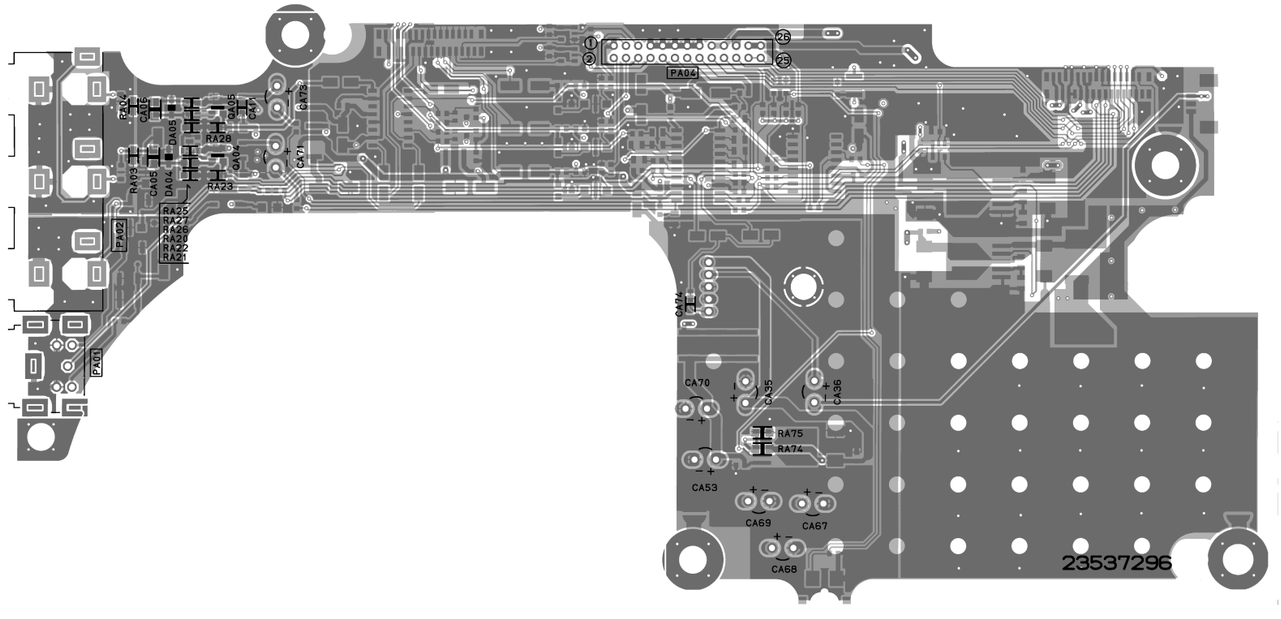

Fig. 2-6-2 U0022 Input PC Board (Bottom Side)

6-2. CAM Switch PC Board

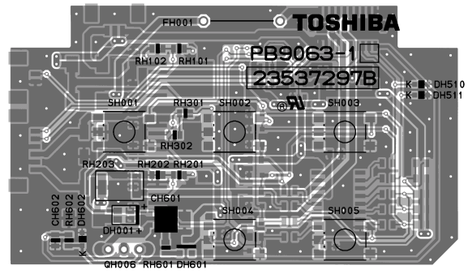

Fig. 2-6-3 U0031
CAM Switch PC Board (Top Side)

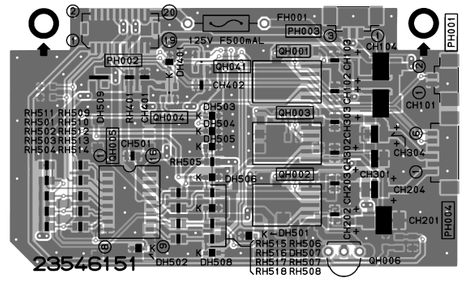

Fig. 2-6-4 U0031
CAM Switch PC Board (Bottom Side)

6-3. Main PC Board

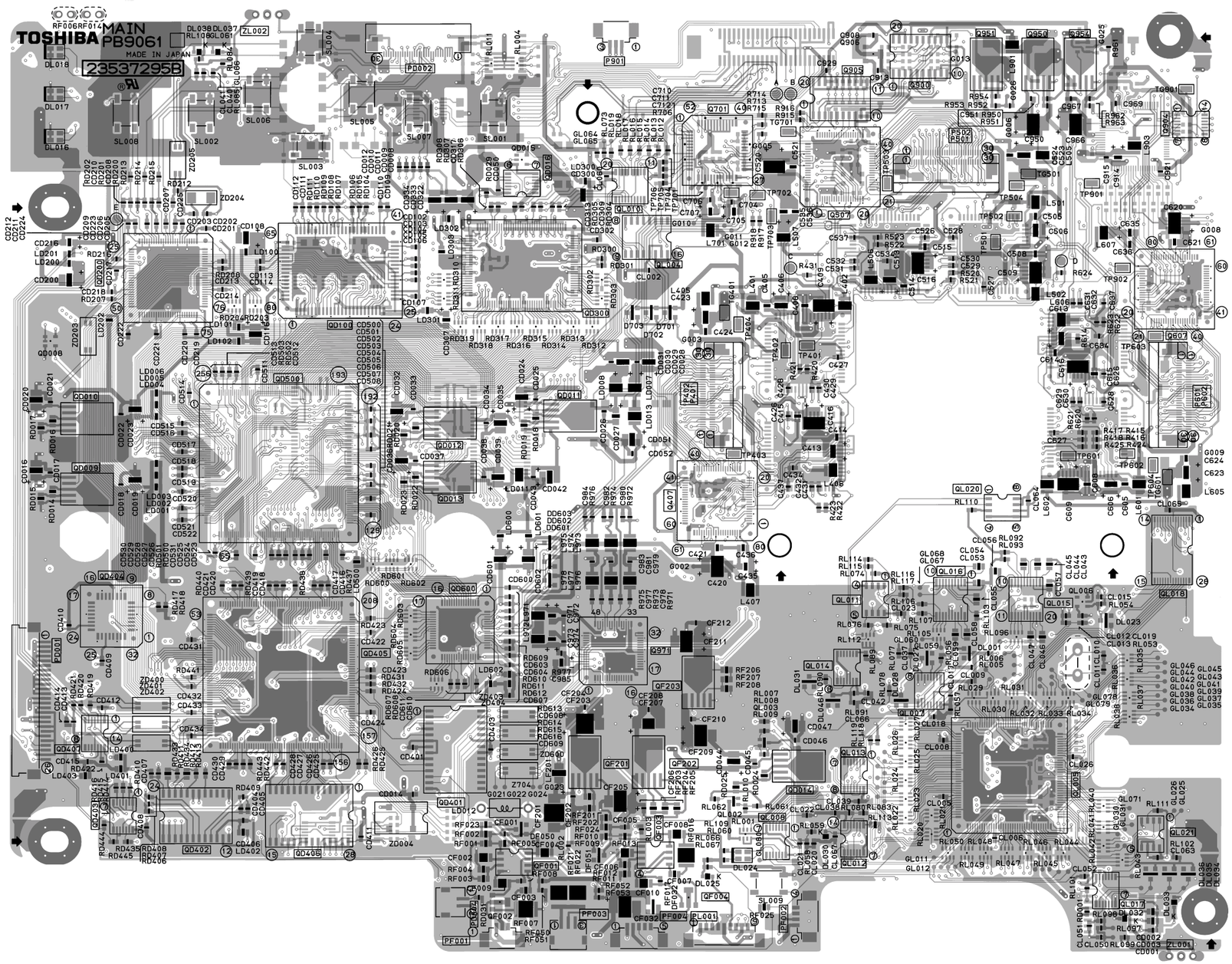

Fig. 2-6-5 U001 Main PC Board (Top Side)

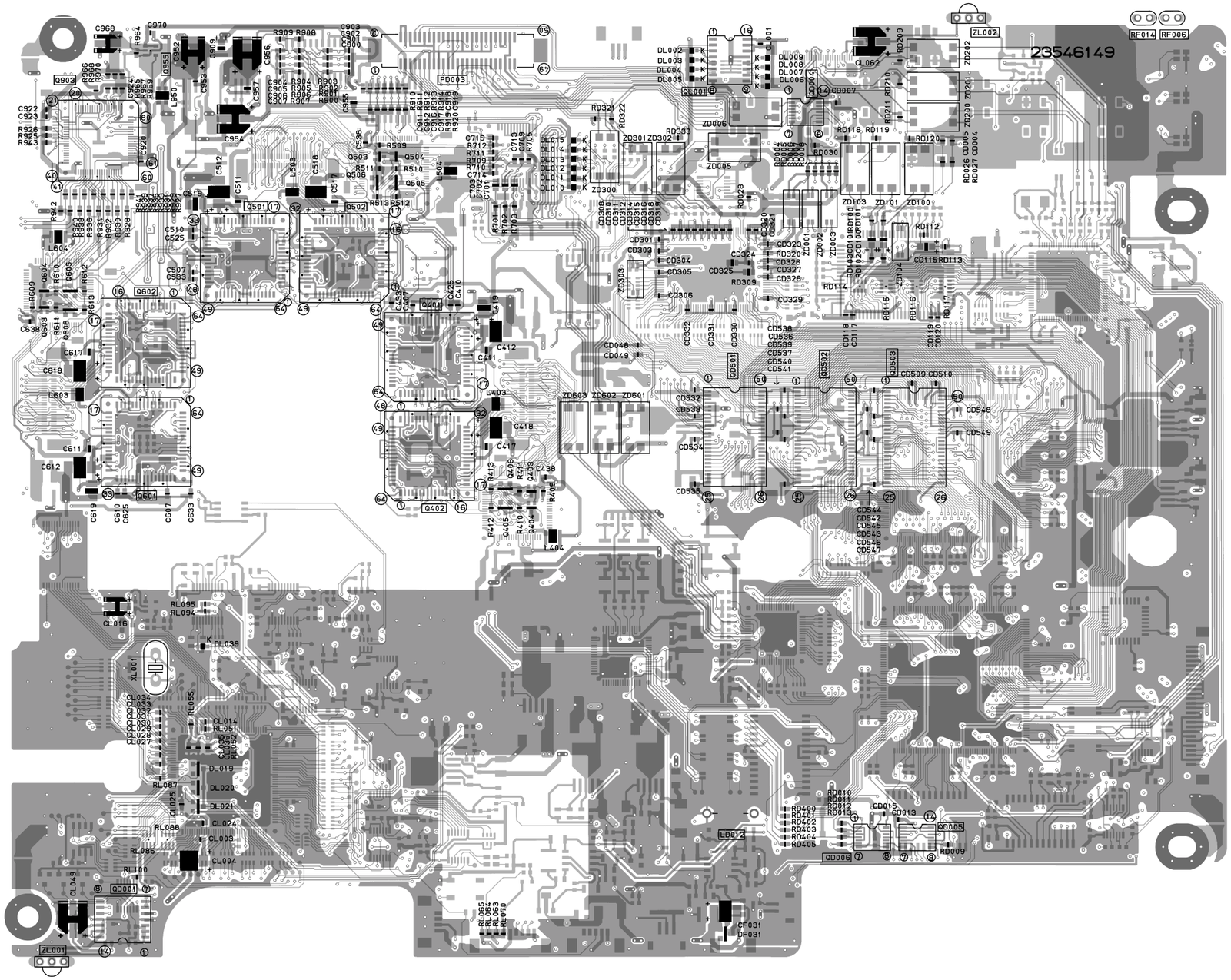
23546149
Q903
Q501
Q502
Q602
Q601
Q402
Q403
Q404
Q405
Q503
Q504
Q505
Q506
PD003
QL001
QD001
QD002
QD003
QD004
QD005
QD006
ZL001
ZL002
RF014
RF006
L604
L603
L403
L404
L501
L502
L503
L504
L505
L506
L507
L508
L509
L510
L511
L512
L513
L514
L515
L516
L517
L518
L519
L520
L521
L522
L523
L524
L525
L526
L527
L528
L529
L530
L531
L532
L533
L534
L535
L536
L537
L538
L539
L540

6-4. RGB PC Board

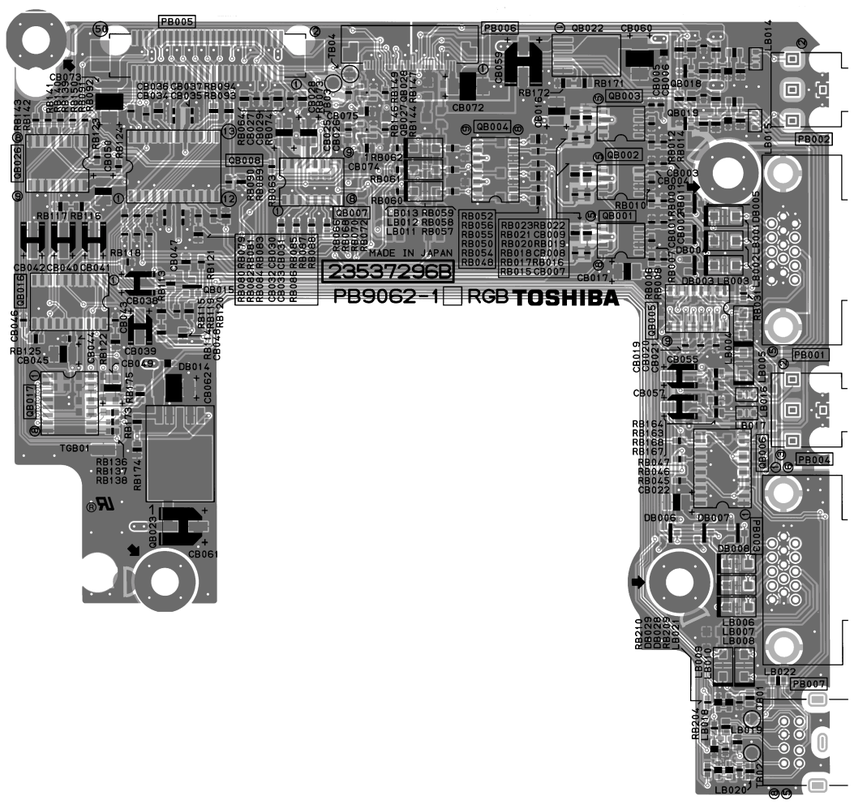

Fig. 2-6-7 U0021 RGB PC Board (Top Side)

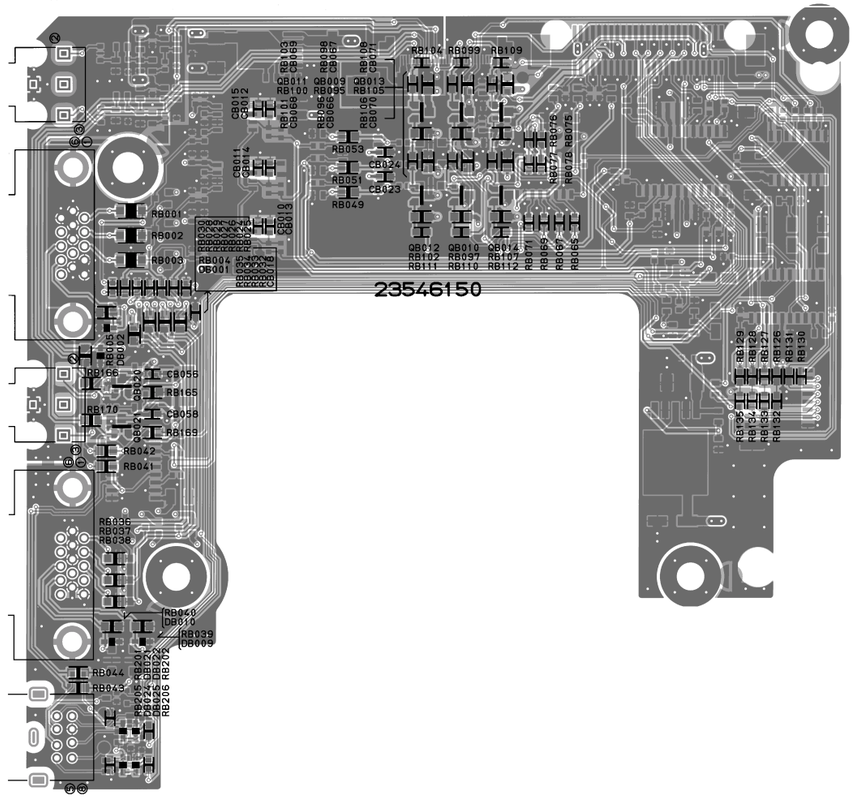

Fig. 2-6-8 U0021 RGB PC Board (Bottom Side)

6-5. LED PC Board

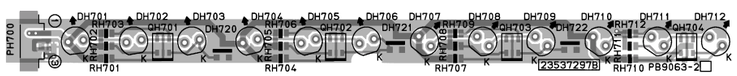

Fig. 2-6-9 U0032 LED PC Board (Top Side)

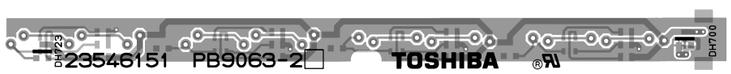

Fig. 2-6-10 U0032 LED PC Board (Bottom Side)

6-6. Sub Digital PC Board

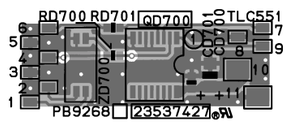

Fig. 2-6-11 U007
Sub Digital PC Board (Top Side)

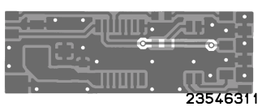

Fig. 2-6-12 U007
Sub Digital PC Board (Bottom Side)

SECTION 3
PARTS LIST

SAFETY PRECAUTION

The parts identified by ⚠ mark are critical for safety. Replace only with part number specified.

The mounting position of replacement is to be identical with originals.

The substitute replacement parts which do not have the same safety characteristics as specified in the parts list may create shock, fire or other hazards.

NOTICE

The part number must be used when ordering parts in order to assist in processing, be sure to include the model number and description.

Parts marked # are of chip type and mounted on original PC boards.

However, when they are placed for servicing works, use discrete parts listed on the parts list.

ABBREVIATIONS

1. **Integrated circuit (IC)**
2. **Capacitor (Cap)**
   - **Capacitance Tolerance (for Nominal Capacitance more than 10pF)**

Table 3-2-1

Symbol	B	C	D	F	G	J	K	M	N
Tolerance %	± 0.1	± 0.25	± 0.5	± 1	± 2	± 5	± 10	± 20	± 30

Symbol	P	Q	T	U	V	W	X	Y	Z
Tolerance %	+ 100 0	+ 30 – 10	+ 50 – 10	+ 75 – 10	+ 20 – 10	+ 100 – 10	+ 40 – 20	+ 150 – 10	+ 80 – 20

Ex. 10µF J = 10µF ± 5%

   - **Capacitance Tolerance (for Nominal Capacitance 10pF or less)**

Table 3-2-2

Symbol	B	C	D	F	G
Tolerance pF	± 0.1	± 0.25	± 0.5	± 1	± 2

Ex. 10pF G = 10pF ± 2pF

3. **Resistor (Res)**
   - **Resistance tolerance**

Table 3-3-1

Symbol	B	C	D	F	G	J	K	M
Tolerance %	± 0.1	± 0.25	± 0.5	± 1	± 2	± 5	± 10	± 20

Ex. 470 Ω J = 470Ω ± 5%

4. EXPLODED VIEWS

4-1. Packing Assembly

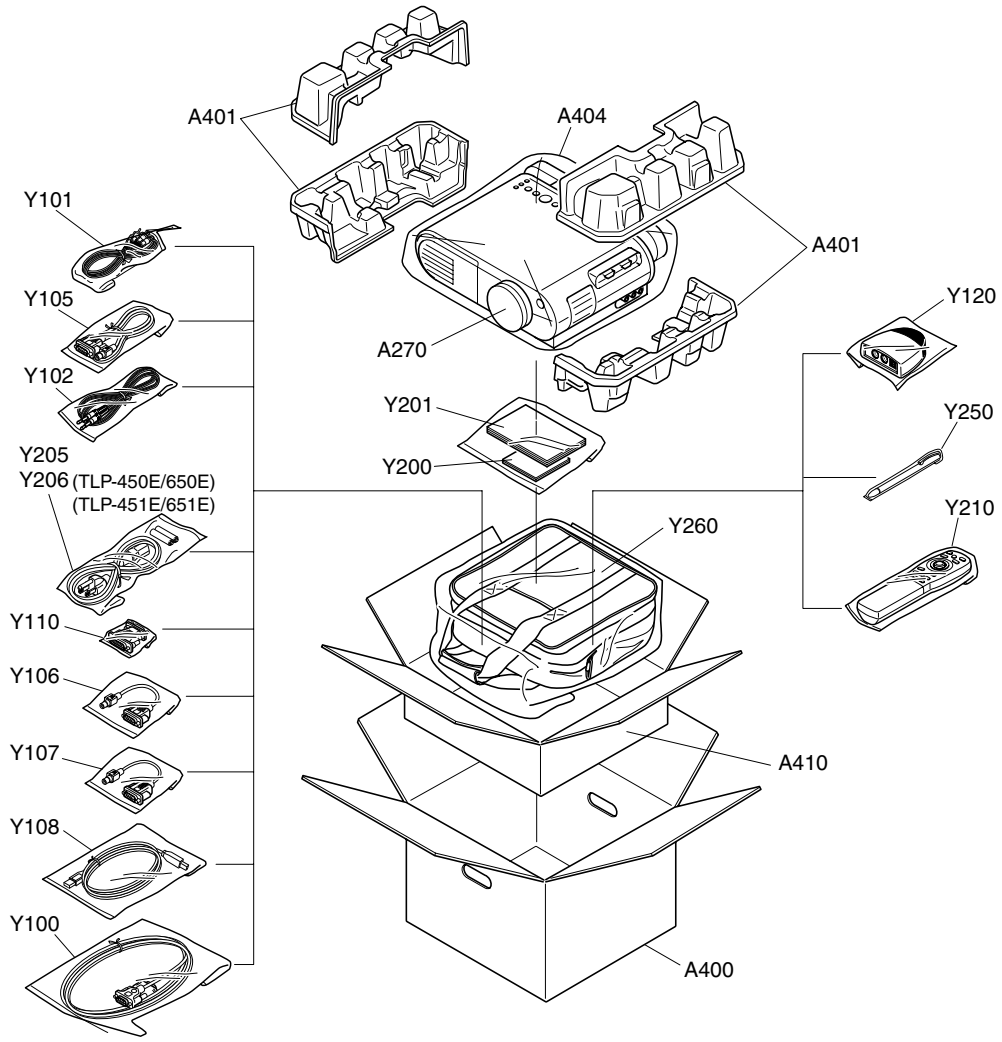

Fig. 3-4-1

4-2. Remote Control Unit

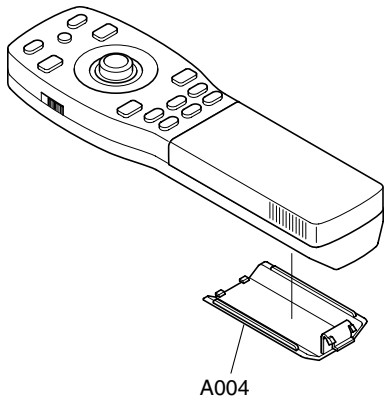

Fig. 3-4-2

4-3. Chassis Assembly

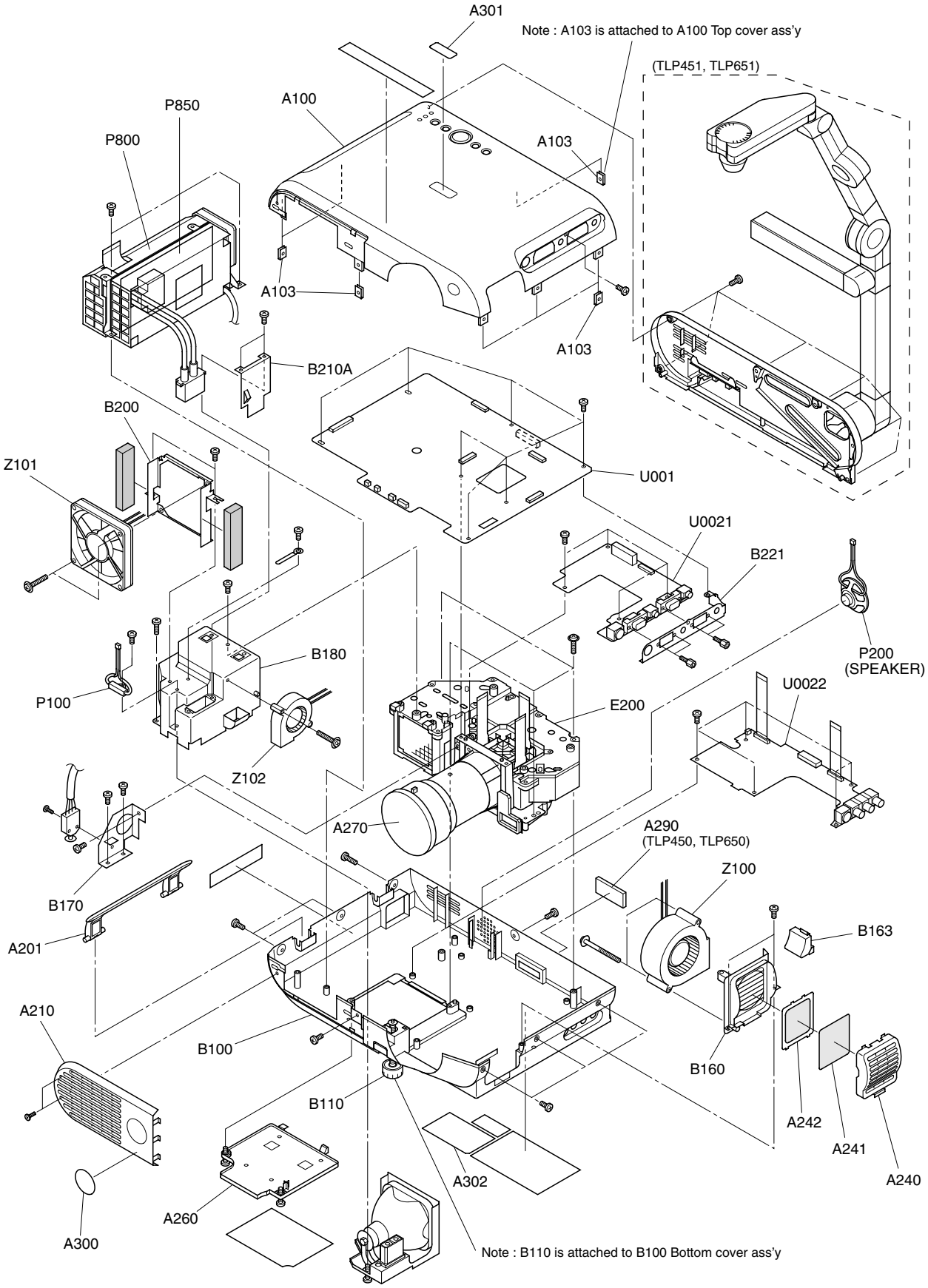

Fig. 3-4-3

4-4. Arm Assembly (TLP451, TLP651)

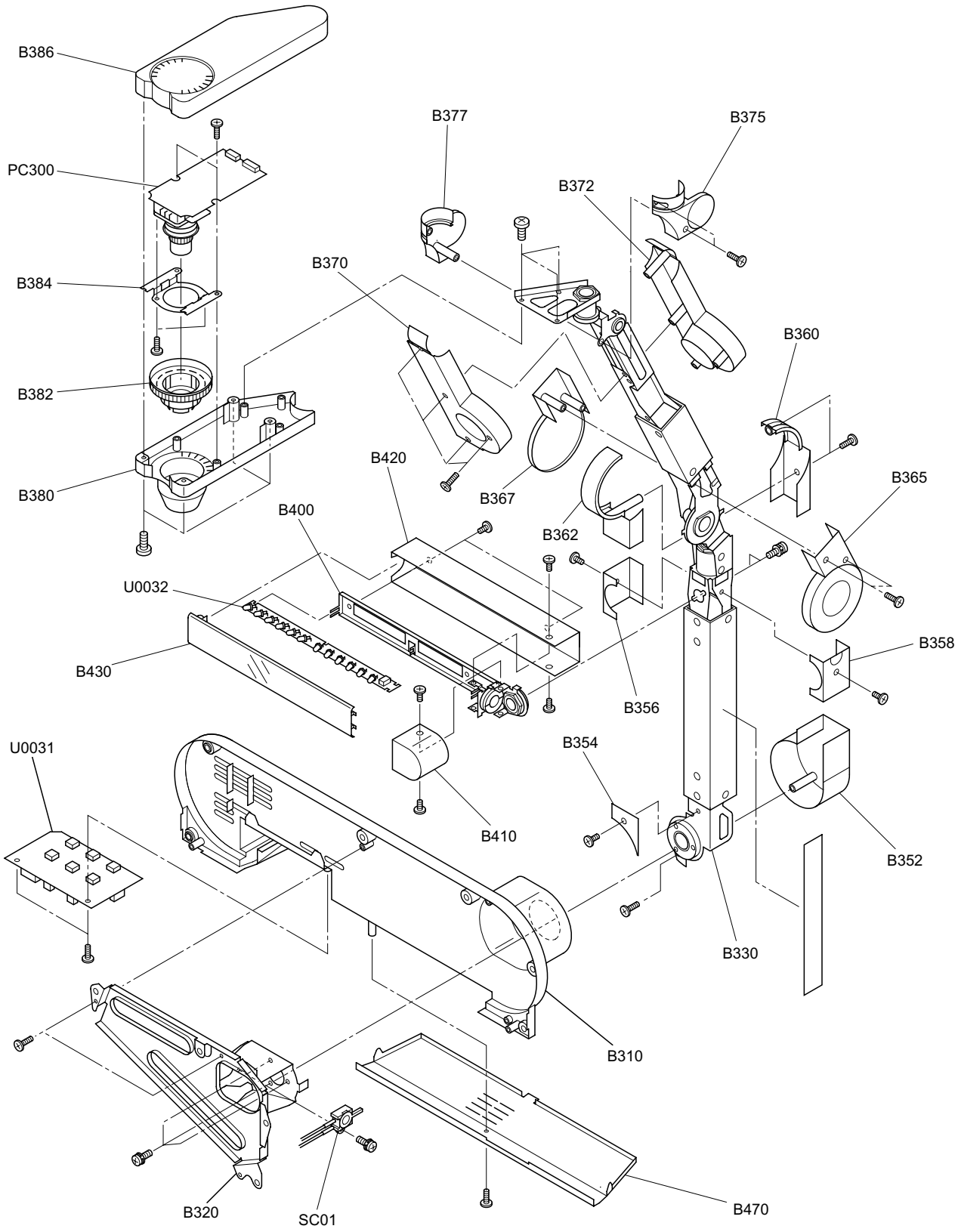

Fig. 3-4-4

5. PARTS LIST

LOCATION NUMBER	PART NUMBER	DESCRIPTION	
		- MECHANICAL PARTS -	
A004	23588495	Case(Battery)	
⚠A100	23549588	Top Cover Assy	
A103	23747007	Nut	
*b⚠A201	23436730	Handle	
*a⚠A201	23436737	Handle	
⚠A210	23549571	Cover	
⚠A240	23549572	Filter Cover	
⚠A241	23466873	Air Filter	
⚠A242	23466874	Air Filter	
⚠A260	23549589	Lamp Cover Assy	
⚠A270	23549574	Lens Cap	
*d A290	23550810	Mask Sheet	
*e⚠A300	23550689	Front Tag	
*f⚠A300	23550690	Front Tag	
*g⚠A300	23550793	Front Tag	
*h⚠A300	23550794	Front Tag	
⚠A301	23550693	Top Tag	
⚠A302	23550796	Label	Rating(TLP450U)
⚠A302	23550804	Label	Rating(TLP450E)
⚠A302	23550795	Label	Rating(TLP451U)
⚠A302	23550803	Label	Rating(TLP451E)
⚠A302	23550692	Label	Rating(TLP650U)
⚠A302	23550802	Label	Rating(TLP650E)
⚠A302	23550691	Label	Rating(TLP651U)
⚠A302	23550801	Label	Rating(TLP651E)
A400	23064004	Case(TLP450U)	
A400	23064006	Case(TLP450E)	
A400	23064001	Case(TLP451U)	
A400	23064003	Case(TLP451E)	
A400	23525996	Case(TLP650U)	
A400	23525998	Case(TLP650E)	
A400	23525966	Case(TLP651U)	
A400	23525995	Case(TLP651E)	
A401	23935919	Packing	
*c A404	23945084	Cover	
*d A404	23945088	Cover	
A410	23918274	Accessory Box	
⚠B100	23411238	Chassis Bottom Assy	
B110	23436731	Foot	
B160	23528039	Holder	
⚠B163	23421992	Fan Mouth Piece	
B170	23841490	Bracket	
⚠B180	23448560	Lamp House Assy	
B200	23841491	Bracket	
B210A	23936010	Plate	
B221	23841493	Bracket	
*c⚠B310	23549570	Cover Assy	
*c⚠B320	23890831	Base Assy	
*c B330	23890832	Arm Assy	
*c⚠B352	23549566	Cover	
*c⚠B354	23549567	Cover	
*c⚠B356	23549564	Cover	
*c⚠B358	23549565	Cover	
*c⚠B360	23549522	Cover	
*c⚠B362	23549523	Cover	
*c⚠B365	23549524	Cover	
*c B367	23549525	Cover	
*c⚠B370	23549520	Cover	
*c⚠B372	23549521	Cover	
*c⚠B375	23549518	Cover	
*c⚠B377	23549519	Cover	
*c⚠B380	23549517	Cover	
*c B382	23549515	Focus Ring Cover	
*c⚠B384	23890821	Base	
*c⚠B386	23549516	Top Cover	
*c B400	23890837	Base	
*c B410	23549575	Cover	
*c⚠B420	23549576	Cover	
*c⚠B430	23549577	Cover	
*c B470	23421989	Plate	
*b⚠E200	23430655	Optical Engine	CJ325TA
*a⚠E200	23430673	Optical Engine	CJ326TA

LOCATION NUMBER	PART NUMBER	DESCRIPTION	
⚠P100	23144598	Thermal Lead SW	OHD3-105B
P200	23351150	Speaker	
⚠P800	23122374	Power Unit	
⚠P850	23122369	Lamp Power Unit	
*c⚠PC300	23771010	Camera Block	IKK81LC
*c SC01	23344401	Switch, Detect	
⚠Y100	23368734	RGB Cable	
⚠Y101	23368732	A/V Cable	
⚠Y102	23368733	Stereo Mini-cable	
⚠Y105	23368676	Cable	DSUB, 9P
⚠Y106	23368677	Cable	DIN4P-DSUB9P
⚠Y107	23368718	Cable	D-Sub, 9P
⚠Y108	23368731	USB Cable	
Y110	23368679	MAC Adaptor	
Y120	23306333	Remote Control Receiver	
⚠Y200	23563715	Owner's Manual(CD-ROM)*1	
*i⚠Y201	23563712	Owner's Manual, English	
*j⚠Y201	23563713	Owner's Manual, English	
*j⚠Y202	23563714	Owner's Manual, French/German	
*i⚠Y205	23176937	Power Cord	125V, 13A
*j⚠Y205	23176002	Power Cord	250V
*j⚠Y206	23372019	Power Cord	250V
⚠Y210	23306332	Remote Control Unit	
Y250	23104032	Pointor	
Y260	23448559	Soft Case	
⚠Z100	23125487	Fan	
⚠Z101	23125873	Fan	
⚠Z102	23125874	Fan	

(Note)
*1: English, French, German, Cantonese, Mandarin, Korean
*a: TLP450, TLP451
*b: TLP650, TLP651
*c: TLP451, TLP651
*d: TLP450, TLP650
*e: TLP651
*f: TLP650
*g: TLP451
*h: TLP450
*i: TLP450U, TLP451U, TLP650U, TLP651U
*j: TLP450E, TLP451E, TLP650E, TLP651E

	LOCATION NUMBER	PART NUMBER	DESCRIPTION	
			- ELECTRICAL PARTS -	
	■U001	23783702	P C Board Assy	Main(TLP650, TLP651)
	■U001	23783974	P C Board Assy	Main(TLP450, TLP451)
			- INTEGRATED CIRCUITS -	
	Q401	23000101	IC	ET6050S0B
*b	Q402	23000101	IC	ET6050S0B
	Q407	23000102	IC	ET1021F0A
	Q501	23000101	IC	ET6050S0B
*b	Q502	23000101	IC	ET6050S0B
	Q507	23000102	IC	ET1021F0A
	Q601	23000101	IC	ET6050S0B
*b	Q602	23000101	IC	ET6050S0B
	Q607	23000102	IC	ET1021F0A
	Q701	23906361	IC	CXA2111R
	Q900	23906224	IC	M62399FP
	Q903	23000964	IC	ET2081F0A
	Q904	20510122	IC	TC74ACT04FT
	Q905	23906661	IC	M62393FP
	Q906	B0370180	IC	TA78L12F
	Q950	70129738	IC	PQ20VZ1U
	Q951	70129738	IC	PQ20VZ1U
	Q954	70129738	IC	PQ20VZ1U
	Q955	A6030630	IC	TC7S08F
	Q971	23000100	IC	CXD3503R
	QD001	23900974	IC	ADXL202JQC
	QD005	23906605	IC	SN74LVC74APW
	QD004	23000069	IC	SN74LVC14APW
	QD006	23906604	IC	SN74LVC04APW
	QD008	A6030640	IC	TC7S32F
	QD009	70129738	IC	PQ20VZ1U
	QD010	70129738	IC	PQ20VZ1U
	QD011	70129738	IC	PQ20VZ1U
	QD012	70129738	IC	PQ20VZ1U
	QD013	70129738	IC	PQ20VZ1U
	QD014	70129738	IC	PQ20VZ1U
	QD015	A6030620	IC	TC7S04F
	QD016	23000955	IC	74LVC125APWR
	QD100	23906983	IC	CXD2303AQ
	QD200	23000959	IC	SAA7114
	QD300	23000068	IC	AD9884KS-140
	QD401	23000107	IC	MB90098-101
	QD402	23906942	IC	ICS1523M
	QD403	23906604	IC	SN74LVC04APW
	QD404	23000120	IC	SYG5X
	QD405	23906667	IC	EPF6024AQ208-2
	QD406	23906473	IC	M51V8221A-30
	QD407	23905013	IC	TLC2932
	QD500	23906982	IC	IP00C711
	QD501	23000112	IC	161610DTC-10
	QD502	23000112	IC	161610DTC-10
	QD503	23000112	IC	161610DTC-10
	QD600	23906984	IC	MB40C950VPFV
	QF001	23000976	IC	TC642V0A
	QF003	23000976	IC	TC642V0A
	QF201	70129738	IC	PQ20VZ1U
	QF202	70129738	IC	PQ20VZ1U
	QF203	70129738	IC	PQ20VZ1U
	QL001	23906234	IC	M62320FP
	QL004	23906234	IC	M62320FP
	QL005	23000104	IC	HD64F7045F28
	QL006	70200430	IC	RN5VD27A
	QL007	23000072	IC	SN74LV123APW
	QL008	23906850	IC	SN74LV14APWR
	QL010	70200250	IC	74VHC541MTCX
	QL011	23906999	IC	CAT24WC16J
	QL012	23000073	IC	SN74LV125APW
	QL013	23000073	IC	SN74LV125APW
	QL014	23906611	IC	SN74LV74APWR
	QL015	70200127	IC	UPD4721GS
	QL016	70200127	IC	UPD4721GS
	QL017	23906850	IC	SN74LV14APWR
	QL018	B0483329	IC	TC55257DFTL-85L
	QL020	23900971	IC	LM75CIMX-5
	QL021	23900971	IC	LM75CIMX-5
	ZL001	23906782	IC	TSOP1838
	ZL002	23906782	IC	TSOP1838
			- TRANSISTORS -	
	Q403	A6365620	Transistor, Chip	2SC4116-Y
	Q404	A6549570	Transistor, Chip	2SA1586-Y
	Q405	A6358620	Transistor, Chip	2SC3265-Y
	Q406	A6546370	Transistor, Chip	2SA1298-Y
	Q503	A6365620	Transistor, Chip	2SC4116-Y
	Q504	A6549570	Transistor, Chip	2SA1586-Y
	Q505	A6358620	Transistor, Chip	2SC3265-Y
	Q506	A6546370	Transistor, Chip	2SA1298-Y
	Q603	A6365620	Transistor, Chip	2SC4116-Y
	Q604	A6549570	Transistor, Chip	2SA1586-Y
	Q605	A6358620	Transistor, Chip	2SC3265-Y
	Q606	A6546370	Transistor, Chip	2SA1298-Y
	QF002	A6341974	Transistor, Chip	2SC2873-Y
	QF004	A6341974	Transistor, Chip	2SC2873-Y
	QL002	A6365620	Transistor, Chip	2SC4116-Y
	QL003	A6365620	Transistor, Chip	2SC4116-Y
			- DIODES -	
	D701	A7152750	Diode, Chip	1SS226
	D702	A7152750	Diode, Chip	1SS226
	D703	A7152750	Diode, Chip	1SS226
	DD601	A7152750	Diode, Chip	1SS226
	DD602	A7152750	Diode, Chip	1SS226
	DD603	A7152750	Diode, Chip	1SS226
	DL001	A7150800	Diode, Chip	1SS187
	DL002	23357168	Diode, Zener	UDZSTE176.2B
	DL003	23357168	Diode, Zener	UDZSTE176.2B
	DL004	23357168	Diode, Zener	UDZSTE176.2B
	DL005	23357168	Diode, Zener	UDZSTE176.2B
	DL006	23357168	Diode, Zener	UDZSTE176.2B
	DL007	23357168	Diode, Zener	UDZSTE176.2B
	DL008	23357168	Diode, Zener	UDZSTE176.2B
	DL009	23357168	Diode, Zener	UDZSTE176.2B
	DL010	23357168	Diode, Zener	UDZSTE176.2B
	DL011	23357168	Diode, Zener	UDZSTE176.2B
	DL012	23357168	Diode, Zener	UDZSTE176.2B
	DL013	23357168	Diode, Zener	UDZSTE176.2B
	DL014	23357168	Diode, Zener	UDZSTE176.2B
	DL015	23357168	Diode, Zener	UDZSTE176.2B
	DL016	23358539	Diode, LED	SML-020MLTT6
	DL017	23358539	Diode, LED	SML-020MLTT6
	DL018	23358539	Diode, LED	SML-020MLTT6
	DL019	A7150800	Diode, Chip	1SS187
	DL020	A7150800	Diode, Chip	1SS187
	DL021	A7150800	Diode, Chip	1SS187
	DL023	A7150800	Diode, Chip	1SS187
	DL024	23358539	Diode, LED	SML-020MLTT6
	DL025	23357169	Diode, Zener	UDZSTE176.8B
	DL027	A7150800	Diode, Chip	1SS187
	DL028	A7150800	Diode, Chip	1SS187
	DL030	23357167	Diode, Zener	UDZS5.1B
	DL031	A7150800	Diode, Chip	1SS187
	DL032	23357168	Diode, Zener	UDZSTE176.2B
	DL033	23357168	Diode, Zener	UDZSTE176.2B
	DL034	A7150800	Diode, Chip	1SS187
	DL035	A7150800	Diode, Chip	1SS187
	DL036	A7150800	Diode, Chip	1SS187
	DL037	23357168	Diode, Zener	UDZSTE176.2B
	DL038	23357168	Diode, Zener	UDZSTE176.2B
	DL039	23357172	Diode, Zener	UDZSTE1710B
			- COILS -	
	L401	23245847	Coil, Chip	TRF4330CC
	L402	23245847	Coil, Chip	TRF4330CC
*b	L403	23245847	Coil, Chip	TRF4330CC
	L404	23245847	Coil, Chip	TRF4330CC
	L405	23245847	Coil, Chip	TRF4330CC
*b	L406	23245847	Coil, Chip	TRF4330CC
	L407	23245847	Coil, Chip	TRF4330CC
	L501	23245847	Coil, Chip	TRF4330CC
	L502	23245847	Coil, Chip	TRF4330CC
*b	L503	23245847	Coil, Chip	TRF4330CC

(Note)
*a: TLP450, TLP451
*b: TLP650, TLP651

	LOCATION NUMBER	PART NUMBER	DESCRIPTION		
	L504	23245847	Coil, Chip	TRF4330CC	
	L505	23245847	Coil, Chip	TRF4330CC	
*b	L506	23245847	Coil, Chip	TRF4330CC	
	L507	23245847	Coil, Chip	TRF4330CC	
	L601	23245847	Coil, Chip	TRF4330CC	
	L602	23245847	Coil, Chip	TRF4330CC	
*b	L603	23245847	Coil, Chip	TRF4330CC	
	L604	23245847	Coil, Chip	TRF4330CC	
	L605	23245847	Coil, Chip	TRF4330CC	
*b	L606	23245847	Coil, Chip	TRF4330CC	
	L607	23245847	Coil, Chip	TRF4330CC	
	L701	23245847	Coil, Chip	TRF4330CC	
	L901	23245847	Coil, Chip	TRF4330CC	
	L903	23245847	Coil, Chip	TRF4330CC	
	L950	23245847	Coil, Chip	TRF4330CC	
	L971	23245847	Coil, Chip	TRF4330CC	
	L972	23245847	Coil, Chip	TRF4330CC	
	L973	23245863	Coil	TRF4331CC	
	L974	23245863	Coil	TRF4331CC	
	L975	23245863	Coil	TRF4331CC	
	L976	23245861	Coil, Chip	TRF4151CC	
	L977	23245861	Coil, Chip	TRF4151CC	
	L978	23245861	Coil, Chip	TRF4151CC	
	LD001	23103793	Coil, Chip	MMZ2012S121A	
	LD002	23103793	Coil, Chip	MMZ2012S121A	
	LD003	23103793	Coil, Chip	MMZ2012S121A	
	LD004	23103793	Coil, Chip	MMZ2012S121A	
	LD005	23103793	Coil, Chip	MMZ2012S121A	
	LD006	23103793	Coil, Chip	MMZ2012S121A	
	LD007	23245851	Coil, Chip	TRF4220CC	
	LD008	23245851	Coil, Chip	TRF4220CC	
	LD011	23245851	Coil, Chip	TRF4220CC	
	LD012	23103880	Coil, Choke	TEM2011Y	
	LD013	23245849	Coil, Chip	TRF4101CC	
	LD100	23103793	Coil, Chip	MMZ2012S121A	
	LD101	23103793	Coil, Chip	MMZ2012S121A	
	LD102	23103793	Coil, Chip	MMZ2012S121A	
	LD200	23103793	Coil, Chip	MMZ2012S121A	
	LD201	23103793	Coil, Chip	MMZ2012S121A	
	LD202	23103793	Coil, Chip	MMZ2012S121A	
	LD300	23103793	Coil, Chip	MMZ2012S121A	
	LD301	23103793	Coil, Chip	MMZ2012S121A	
	LD302	23103793	Coil, Chip	MMZ2012S121A	
	LD303	23103793	Coil, Chip	MMZ2012S121A	
	LD400	23103793	Coil, Chip	MMZ2012S121A	
	LD401	23103793	Coil, Chip	MMZ2012S121A	
	LD402	23103793	Coil, Chip	MMZ2012S121A	
	LD403	23103793	Coil, Chip	MMZ2012S121A	
	LD500	23103793	Coil, Chip	MMZ2012S121A	
	LD600	23103793	Coil, Chip	MMZ2012S121A	
	LD601	23103793	Coil, Chip	MMZ2012S121A	
	LD602	23103793	Coil, Chip	MMZ2012S121A	
	LF201	23245847	Coil, Chip	TRF4330CC	
			- CAPACITORS -		
	C405	24092538	Cap, Chip	1μF	Z 10V
	C406	24088085	Cap, Chip	22μF	M 10V
	C407	24100103	Cap, Chip	0.01μF	Z 50V
	C408	24092294	Cap, Chip	0.33μF	Z 16V
	C409	24295106	Cap, Chip	10μF	M 25V
	C410	24100104	Cap, Chip	0.1μF	Z 25V
	C411	24092294	Cap, Chip	0.33μF	Z 16V
	C412	24295106	Cap, Chip	10μF	M 25V
*b	C413	24088085	Cap, Chip	22μF	M 10V
*b	C414	24092538	Cap, Chip	1μF	Z 10V
*b	C415	24092294	Cap, Chip	0.33μF	Z 16V
*b	C416	24295106	Cap, Chip	10μF	M 25V
*b	C417	24092294	Cap, Chip	0.33μF	Z 16V
*b	C418	24295106	Cap, Chip	10μF	M 25V
	C419	24088093	Cap, Chip	15μF	M 16V
	C420	24295106	Cap, Chip	10μF	M 25V
	C421	24092294	Cap, Chip	0.33μF	Z 16V
	C423	24088096	Cap, Chip	4.7μF	M 25V
	C424	24092294	Cap, Chip	0.33μF	Z 16V
	C425	24100104	Cap, Chip	0.1μF	Z 25V
	C426	24100104	Cap, Chip	0.1μF	Z 25V

	LOCATION NUMBER	PART NUMBER	DESCRIPTION		
	C427	24100104	Cap, Chip	0.1μF	Z 25V
	C428	24100104	Cap, Chip	0.1μF	Z 25V
	C429	24100104	Cap, Chip	0.1μF	Z 25V
	C430	24100104	Cap, Chip	0.1μF	Z 25V
	C431	24100104	Cap, Chip	0.1μF	Z 25V
	C432	24100104	Cap, Chip	0.1μF	Z 25V
	C433	24100104	Cap, Chip	0.1μF	Z 25V
	C434	24100104	Cap, Chip	0.1μF	Z 25V
	C435	24088079	Cap, Chip	10μF	M 10V
	C436	24092294	Cap, Chip	0.33μF	Z 16V
	C437	24100104	Cap, Chip	0.1μF	Z 25V
	C438	24100104	Cap, Chip	0.1μF	Z 25V
	C439	24436330	Cap, Ceramic	33pF	J 50V
	C505	24092538	Cap, Chip	1μF	Z 10V
	C506	24088085	Cap, Chip	22μF	M 10V
	C507	24100103	Cap, Chip	0.01μF	Z 50V
	C508	24092294	Cap, Chip	0.33μF	Z 16V
	C509	24295106	Cap, Chip	10μF	M 25V
	C510	24100104	Cap, Chip	0.1μF	Z 25V
	C511	24092294	Cap, Chip	0.33μF	Z 16V
	C512	24295106	Cap, Chip	10μF	M 25V
*b	C513	24088085	Cap, Chip	22μF	M 10V
*b	C514	24092538	Cap, Chip	1μF	Z 10V
*b	C515	24092294	Cap, Chip	0.33μF	Z 16V
*b	C516	24295106	Cap, Chip	10μF	M 25V
*b	C517	24092294	Cap, Chip	0.33μF	Z 16V
*b	C518	24295106	Cap, Chip	10μF	M 25V
	C519	24088093	Cap, Chip	15μF	M 16V
	C520	24295106	Cap, Chip	10μF	M 25V
	C521	24092294	Cap, Chip	0.33μF	Z 16V
	C523	24088096	Cap, Chip	4.7μF	M 25V
	C524	24092294	Cap, Chip	0.33μF	Z 16V
	C525	24100104	Cap, Chip	0.1μF	Z 25V
	C526	24100104	Cap, Chip	0.1μF	Z 25V
	C527	24100104	Cap, Chip	0.1μF	Z 25V
	C528	24100104	Cap, Chip	0.1μF	Z 25V
	C529	24100104	Cap, Chip	0.1μF	Z 25V
	C530	24100104	Cap, Chip	0.1μF	Z 25V
	C531	24100104	Cap, Chip	0.1μF	Z 25V
	C532	24100104	Cap, Chip	0.1μF	Z 25V
	C533	24100104	Cap, Chip	0.1μF	Z 25V
	C534	24100104	Cap, Chip	0.1μF	Z 25V
	C535	24088079	Cap, Chip	10μF	M 10V
	C536	24092294	Cap, Chip	0.33μF	Z 16V
	C537	24100104	Cap, Chip	0.1μF	Z 25V
	C538	24100104	Cap, Chip	0.1μF	Z 25V
	C539	24436330	Cap, Ceramic	33pF	J 50V
	C605	24092538	Cap, Chip	1μF	Z 10V
	C606	24088085	Cap, Chip	22μF	M 10V
	C607	24100103	Cap, Chip	0.01μF	Z 50V
	C608	24092294	Cap, Chip	0.33μF	Z 16V
	C609	24295106	Cap, Chip	10μF	M 25V
	C610	24100104	Cap, Chip	0.1μF	Z 25V
	C611	24092294	Cap, Chip	0.33μF	Z 16V
	C612	24295106	Cap, Chip	10μF	M 25V
*b	C613	24088085	Cap, Chip	22μF	M 10V
*b	C614	24092538	Cap, Chip	1μF	Z 10V
*b	C615	24092294	Cap, Chip	0.33μF	Z 16V
*b	C616	24295106	Cap, Chip	10μF	M 25V
*b	C617	24092294	Cap, Chip	0.33μF	Z 16V
*b	C618	24295106	Cap, Chip	10μF	M 25V
	C619	24088093	Cap, Chip	15μF	M 16V
	C620	24295106	Cap, Chip	10μF	M 25V
	C621	24092294	Cap, Chip	0.33μF	Z 16V
	C623	24088096	Cap, Chip	4.7μF	M 25V
	C624	24092294	Cap, Chip	0.33μF	Z 16V
	C625	24100104	Cap, Chip	0.1μF	Z 25V
	C626	24100104	Cap, Chip	0.1μF	Z 25V
	C627	24100104	Cap, Chip	0.1μF	Z 25V
	C628	24100104	Cap, Chip	0.1μF	Z 25V
	C629	24100104	Cap, Chip	0.1μF	Z 25V
	C630	24100104	Cap, Chip	0.1μF	Z 25V
	C631	24100104	Cap, Chip	0.1μF	Z 25V
	C632	24100104	Cap, Chip	0.1μF	Z 25V
	C633	24100104	Cap, Chip	0.1μF	Z 25V

(Note)
*a: TLP450, TLP451
*b: TLP650, TLP651

LOCATION NUMBER	PART NUMBER	DESCRIPTION		
C634	24100104	Cap, Chip	0.1μF	Z 25V
C635	24088079	Cap, Chip	10μF	M 10V
C636	24092294	Cap, Chip	0.33μF	Z 16V
C637	24100104	Cap, Chip	0.1μF	Z 25V
C638	24100104	Cap, Chip	0.1μF	Z 25V
C639	24436330	Cap, Ceramic	33pF	J 50V
C701	24092441	Cap, Chip	1μF	Z 16V
C702	24092441	Cap, Chip	1μF	Z 16V
C703	24092441	Cap, Chip	1μF	Z 16V
C704	24092538	Cap, Chip	1μF	Z 10V
C705	24088079	Cap, Chip	10μF	M 10V
C706	24092538	Cap, Chip	1μF	Z 10V
C707	24088079	Cap, Chip	10μF	M 10V
C709	24100104	Cap, Chip	0.1μF	Z 25V
C710	24100104	Cap, Chip	0.1μF	Z 25V
C711	24100104	Cap, Chip	0.1μF	Z 25V
C712	24100104	Cap, Chip	0.1μF	Z 25V
C713	24100104	Cap, Chip	0.1μF	Z 25V
C714	24100104	Cap, Chip	0.1μF	Z 25V
C715	24100104	Cap, Chip	0.1μF	Z 25V
C900	24100104	Cap, Chip	0.1μF	Z 25V
C901	24100104	Cap, Chip	0.1μF	Z 25V
C902	24100104	Cap, Chip	0.1μF	Z 25V
C903	24100104	Cap, Chip	0.1μF	Z 25V
C904	24100104	Cap, Chip	0.1μF	Z 25V
C905	24100104	Cap, Chip	0.1μF	Z 25V
C906	24100104	Cap, Chip	0.1μF	Z 25V
C907	24100104	Cap, Chip	0.1μF	Z 25V
C908	24092538	Cap, Chip	1μF	Z 10V
C909	24088079	Cap, Chip	10μF	M 10V
C911	24092538	Cap, Chip	1μF	Z 10V
C912	24092538	Cap, Chip	1μF	Z 10V
C913	24092538	Cap, Chip	1μF	Z 10V
C914	24088079	Cap, Chip	10μF	M 10V
C915	24092538	Cap, Chip	1μF	Z 10V
C916	24100104	Cap, Chip	0.1μF	Z 25V
C917	24100104	Cap, Chip	0.1μF	Z 25V
C918	24100104	Cap, Chip	0.1μF	Z 25V
C919	24100104	Cap, Chip	0.1μF	Z 25V
C920	24092538	Cap, Chip	1μF	Z 10V
C921	24092538	Cap, Chip	1μF	Z 10V
C922	24092538	Cap, Chip	1μF	Z 10V
C923	24092538	Cap, Chip	1μF	Z 10V
C924	24092538	Cap, Chip	1μF	Z 10V
C929	24092538	Cap, Chip	1μF	Z 10V
C950	24295106	Cap, Chip	10μF	M 25V
C951	24092538	Cap, Chip	1μF	Z 10V
C952	24619099	Cap, Chip	33μF	M 10V
C953	24092538	Cap, Chip	1μF	Z 10V
C954	24619106	Cap, Chip	33μF	M 25V
C955	24092293	Cap, Chip	0.1μF	Z 25V
C956	24619106	Cap, Chip	33μF	M 25V
C957	24092441	Cap, Chip	1μF	Z 16V
C966	24295106	Cap, Chip	10μF	M 25V
C967	24092538	Cap, Chip	1μF	Z 10V
C968	24619096	Cap, Chip	22μF	M 6.3V
C969	24092538	Cap, Chip	1μF	Z 10V
C970	24092538	Cap, Chip	1μF	Z 10V
C971	24088079	Cap, Chip	10μF	M 10V
C972	24092538	Cap, Chip	1μF	Z 10V
C973	24088079	Cap, Chip	10μF	M 10V
C974	24092538	Cap, Chip	1μF	Z 10V
C977	24100104	Cap, Chip	0.1μF	Z 25V
C978	24100104	Cap, Chip	0.1μF	Z 25V
C979	24109331	Cap, Chip	330pF	K 50V
C980	24109681	Cap, Chip	680pF	K 50V
C981	24109331	Cap, Chip	330pF	K 50V
C982	24109681	Cap, Chip	680pF	K 50V
C983	24109331	Cap, Chip	330pF	K 50V
C984	24109681	Cap, Chip	680pF	K 50V
C985	24088079	Cap, Chip	10μF	M 10V
CD001	24092538	Cap, Chip	1μF	Z 10V
CD002	24092573	Cap, Chip	0.47μF	K 16V
CD003	24092573	Cap, Chip	0.47μF	K 16V
CD004	24109103	Cap, Chip	0.01μF	K 25V

LOCATION NUMBER	PART NUMBER	DESCRIPTION		
CD005	24109103	Cap, Chip	0.01μF	K 25V
CD007	24092538	Cap, Chip	1μF	Z 10V
CD008	24105101	Cap, Chip	100pF	J 50V
CD009	24105101	Cap, Chip	100pF	J 50V
CD010	24105101	Cap, Chip	100pF	J 50V
CD011	24105101	Cap, Chip	100pF	J 50V
CD012	24105101	Cap, Chip	100pF	J 50V
CD013	24092538	Cap, Chip	1μF	Z 10V
CD014	24092538	Cap, Chip	1μF	Z 10V
CD015	24092538	Cap, Chip	1μF	Z 10V
CD016	24088951	Cap, Chip	6.8μF	M 16V
CD017	24092538	Cap, Chip	1μF	Z 10V
CD018	24092538	Cap, Chip	1μF	Z 10V
CD019	24088951	Cap, Chip	6.8μF	M 16V
CD020	24088951	Cap, Chip	6.8μF	M 16V
CD021	24092538	Cap, Chip	1μF	Z 10V
CD022	24092538	Cap, Chip	1μF	Z 10V
CD023	24088951	Cap, Chip	6.8μF	M 16V
CD024	24088951	Cap, Chip	6.8μF	M 16V
CD025	24092538	Cap, Chip	1μF	Z 10V
CD026	24092538	Cap, Chip	1μF	Z 10V
CD027	24088079	Cap, Chip	10μF	M 10V
CD028	24088080	Cap, Chip	33μF	M 10V
CD029	24092538	Cap, Chip	1μF	Z 10V
CD030	24088080	Cap, Chip	33μF	M 10V
CD031	24092538	Cap, Chip	1μF	Z 10V
CD032	24088951	Cap, Chip	6.8μF	M 16V
CD033	24092538	Cap, Chip	1μF	Z 10V
CD034	24092538	Cap, Chip	1μF	Z 10V
CD035	24088951	Cap, Chip	6.8μF	M 16V
CD036	24088951	Cap, Chip	6.8μF	M 16V
CD037	24092538	Cap, Chip	1μF	Z 10V
CD038	24092538	Cap, Chip	1μF	Z 10V
CD039	24088951	Cap, Chip	6.8μF	M 16V
CD042	24088951	Cap, Chip	6.8μF	M 16V
CD043	24092538	Cap, Chip	1μF	Z 10V
CD044	24088951	Cap, Chip	6.8μF	M 16V
CD045	24092538	Cap, Chip	1μF	Z 10V
CD046	24092538	Cap, Chip	1μF	Z 10V
CD047	24088951	Cap, Chip	6.8μF	M 16V
CD050	24092538	Cap, Chip	1μF	Z 10V
CD052	24092538	Cap, Chip	1μF	Z 10V
CD100	24088079	Cap, Chip	10μF	M 10V
CD101	24088079	Cap, Chip	10μF	M 10V
CD102	24092538	Cap, Chip	1μF	Z 10V
CD103	24092538	Cap, Chip	1μF	Z 10V
CD104	24092538	Cap, Chip	1μF	Z 10V
CD105	24092538	Cap, Chip	1μF	Z 10V
CD106	24092538	Cap, Chip	1μF	Z 10V
CD107	24092538	Cap, Chip	1μF	Z 10V
CD108	24088951	Cap, Chip	6.8μF	M 16V
CD109	24092538	Cap, Chip	1μF	Z 10V
CD110	24092538	Cap, Chip	1μF	Z 10V
CD111	24092538	Cap, Chip	1μF	Z 10V
CD112	24092538	Cap, Chip	1μF	Z 10V
CD113	24092538	Cap, Chip	1μF	Z 10V
CD114	24092538	Cap, Chip	1μF	Z 10V
CD115	24088079	Cap, Chip	10μF	M 10V
CD116	24088951	Cap, Chip	6.8μF	M 16V
CD117	24092538	Cap, Chip	1μF	Z 10V
CD118	24092538	Cap, Chip	1μF	Z 10V
CD119	24092538	Cap, Chip	1μF	Z 10V
CD120	24092538	Cap, Chip	1μF	Z 10V
CD200	24088079	Cap, Chip	10μF	M 10V
CD201	24092538	Cap, Chip	1μF	Z 10V
CD202	24105090	Cap, Chip	9pF	J 50V
CD203	24105090	Cap, Chip	9pF	J 50V
CD205	24092538	Cap, Chip	1μF	Z 10V
CD206	24092538	Cap, Chip	1μF	Z 10V
CD207	24109473	Cap, Chip	0.047μF	K 25V
CD208	24109473	Cap, Chip	0.047μF	K 25V
CD209	24092538	Cap, Chip	1μF	Z 10V
CD210	24109473	Cap, Chip	0.047μF	K 25V
CD211	24092538	Cap, Chip	1μF	Z 10V
CD212	24092538	Cap, Chip	1μF	Z 10V

LOCATION NUMBER	PART NUMBER	DESCRIPTION		
CD213	24092538	Cap, Chip	1μF	Z 10V
CD214	24092538	Cap, Chip	1μF	Z 10V
CD216	24088079	Cap, Chip	10μF	M 10V
CD217	24092538	Cap, Chip	1μF	Z 10V
CD218	24092538	Cap, Chip	1μF	Z 10V
CD219	24092538	Cap, Chip	1μF	Z 10V
CD220	24092538	Cap, Chip	1μF	Z 10V
CD221	24092538	Cap, Chip	1μF	Z 10V
CD222	24092538	Cap, Chip	1μF	Z 10V
CD223	24092538	Cap, Chip	1μF	Z 10V
CD224	24092538	Cap, Chip	1μF	Z 10V
CD225	24109473	Cap, Chip	0.047μF	K 25V
CD300	24088080	Cap, Chip	33μF	M 10V
CD301	24092538	Cap, Chip	1μF	Z 10V
CD302	24092538	Cap, Chip	1μF	Z 10V
CD303	24092538	Cap, Chip	1μF	Z 10V
CD304	24092538	Cap, Chip	1μF	Z 10V
CD305	24092538	Cap, Chip	1μF	Z 10V
CD306	24092538	Cap, Chip	1μF	Z 10V
CD307	24088079	Cap, Chip	10μF	M 10V
CD308	24092538	Cap, Chip	1μF	Z 10V
CD309	24109473	Cap, Chip	0.047μF	K 25V
CD310	24092538	Cap, Chip	1μF	Z 10V
CD311	24092538	Cap, Chip	1μF	Z 10V
CD312	24092538	Cap, Chip	1μF	Z 10V
CD313	24109473	Cap, Chip	0.047μF	K 25V
CD314	24092538	Cap, Chip	1μF	Z 10V
CD315	24092538	Cap, Chip	1μF	Z 10V
CD316	24092538	Cap, Chip	1μF	Z 10V
CD317	24109473	Cap, Chip	0.047μF	K 25V
CD318	24092538	Cap, Chip	1μF	Z 10V
CD319	24092538	Cap, Chip	1μF	Z 10V
CD320	24092538	Cap, Chip	1μF	Z 10V
CD321	24092538	Cap, Chip	1μF	Z 10V
CD322	24088080	Cap, Chip	33μF	M 10V
CD323	24092538	Cap, Chip	1μF	Z 10V
CD324	24109103	Cap, Chip	0.01μF	K 25V
CD325	24092543	Cap, Chip	0.18μF	Z 125V
CD326	24092538	Cap, Chip	1μF	Z 10V
CD327	24092538	Cap, Chip	1μF	Z 10V
CD328	24092538	Cap, Chip	1μF	Z 10V
CD329	24092538	Cap, Chip	1μF	Z 10V
CD330	24092538	Cap, Chip	1μF	Z 10V
CD331	24092538	Cap, Chip	1μF	Z 10V
CD332	24092538	Cap, Chip	1μF	Z 10V
CD333	24088080	Cap, Chip	33μF	M 10V
CD334	24088080	Cap, Chip	33μF	M 10V
CD401	24092538	Cap, Chip	1μF	Z 10V
CD403	24100104	Cap, Chip	0.1μF	Z 25V
CD404	24109332	Cap, Chip	3300pF	K 50V
CD405	24105151	Cap, Chip	150pF	J 50V
CD406	24092538	Cap, Chip	1μF	Z 10V
CD407	24100104	Cap, Chip	0.1μF	Z 25V
CD408	24092538	Cap, Chip	1μF	Z 10V
CD409	24092538	Cap, Chip	1μF	Z 10V
CD410	24092538	Cap, Chip	1μF	Z 10V
CD411	24092538	Cap, Chip	1μF	Z 10V
CD412	24092538	Cap, Chip	1μF	Z 10V
CD413	24092730	Cap, Chip	0.1μP	K 16V
CD415	24092538	Cap, Chip	1μF	Z 10V
CD416	24092538	Cap, Chip	1μF	Z 10V
CD417	24092538	Cap, Chip	1μF	Z 10V
CD418	24092538	Cap, Chip	1μF	Z 10V
CD419	24092538	Cap, Chip	1μF	Z 10V
CD420	24092538	Cap, Chip	1μF	Z 10V
CD421	24092538	Cap, Chip	1μF	Z 10V
CD422	24092538	Cap, Chip	1μF	Z 10V
CD423	24092538	Cap, Chip	1μF	Z 10V
CD424	24092538	Cap, Chip	1μF	Z 10V
CD425	24092538	Cap, Chip	1μF	Z 10V
CD426	24092538	Cap, Chip	1μF	Z 10V
CD427	24092538	Cap, Chip	1μF	Z 10V
CD428	24092538	Cap, Chip	1μF	Z 10V
CD429	24092538	Cap, Chip	1μF	Z 10V
CD430	24092538	Cap, Chip	1μF	Z 10V

LOCATION NUMBER	PART NUMBER	DESCRIPTION		
CD431	24092538	Cap, Chip	1μF	Z 10V
CD432	24092538	Cap, Chip	1μF	Z 10V
CD433	24092538	Cap, Chip	1μF	Z 10V
CD434	24092538	Cap, Chip	1μF	Z 10V
CD500	24092538	Cap, Chip	1μF	Z 10V
CD501	24092538	Cap, Chip	1μF	Z 10V
CD502	24092538	Cap, Chip	1μF	Z 10V
CD503	24092538	Cap, Chip	1μF	Z 10V
CD504	24092538	Cap, Chip	1μF	Z 10V
CD505	24092538	Cap, Chip	1μF	Z 10V
CD506	24092538	Cap, Chip	1μF	Z 10V
CD507	24092538	Cap, Chip	1μF	Z 10V
CD508	24092538	Cap, Chip	1μF	Z 10V
CD509	24092538	Cap, Chip	1μF	Z 10V
CD510	24092538	Cap, Chip	1μF	Z 10V
CD511	24092538	Cap, Chip	1μF	Z 10V
CD512	24092538	Cap, Chip	1μF	Z 10V
CD513	24092538	Cap, Chip	1μF	Z 10V
CD514	24092538	Cap, Chip	1μF	Z 10V
CD515	24092538	Cap, Chip	1μF	Z 10V
CD516	24092538	Cap, Chip	1μF	Z 10V
CD517	24092538	Cap, Chip	1μF	Z 10V
CD518	24092538	Cap, Chip	1μF	Z 10V
CD519	24092538	Cap, Chip	1μF	Z 10V
CD520	24092538	Cap, Chip	1μF	Z 10V
CD521	24092538	Cap, Chip	1μF	Z 10V
CD522	24092538	Cap, Chip	1μF	Z 10V
CD523	24092538	Cap, Chip	1μF	Z 10V
CD524	24092538	Cap, Chip	1μF	Z 10V
CD525	24092538	Cap, Chip	1μF	Z 10V
CD526	24092538	Cap, Chip	1μF	Z 10V
CD527	24092538	Cap, Chip	1μF	Z 10V
CD528	24092538	Cap, Chip	1μF	Z 10V
CD529	24092538	Cap, Chip	1μF	Z 10V
CD530	24092538	Cap, Chip	1μF	Z 10V
CD531	24092538	Cap, Chip	1μF	Z 10V
CD532	24092538	Cap, Chip	1μF	Z 10V
CD533	24092538	Cap, Chip	1μF	Z 10V
CD534	24092538	Cap, Chip	1μF	Z 10V
CD535	24092538	Cap, Chip	1μF	Z 10V
CD536	24092538	Cap, Chip	1μF	Z 10V
CD537	24092538	Cap, Chip	1μF	Z 10V
CD538	24092538	Cap, Chip	1μF	Z 10V
CD539	24092538	Cap, Chip	1μF	Z 10V
CD540	24092538	Cap, Chip	1μF	Z 10V
CD541	24092538	Cap, Chip	1μF	Z 10V
CD542	24092538	Cap, Chip	1μF	Z 10V
CD543	24092538	Cap, Chip	1μF	Z 10V
CD544	24092538	Cap, Chip	1μF	Z 10V
CD545	24092538	Cap, Chip	1μF	Z 10V
CD546	24092538	Cap, Chip	1μF	Z 10V
CD547	24092538	Cap, Chip	1μF	Z 10V
CD548	24092538	Cap, Chip	1μF	Z 10V
CD549	24092538	Cap, Chip	1μF	Z 10V
CD600	24100104	Cap, Chip	0.1μF	Z 25V
CD601	24088951	Cap, Chip	6.8μF	M 16V
CD602	24088951	Cap, Chip	6.8μF	M 16V
CD603	24092538	Cap, Chip	1μF	Z 10V
CD604	24092538	Cap, Chip	1μF	Z 10V
CD607	24092538	Cap, Chip	1μF	Z 10V
CD608	24100104	Cap, Chip	0.1μF	Z 25V
CD609	24092538	Cap, Chip	1μF	Z 10V
CD610	24100104	Cap, Chip	0.1μF	Z 25V
CD611	24100104	Cap, Chip	0.1μF	Z 25V
CF001	24109103	Cap, Chip	0.01μF	K 25V
CF002	24092291	Cap, Chip	1μF	Z 16V
CF003	24092178	Cap, Chip	0.1μF	K 25V
CF004	24092291	Cap, Chip	1μF	Z 16V
CF005	24109103	Cap, Chip	0.01μF	K 25V
CF006	24092291	Cap, Chip	1μF	Z 16V
CF007	24092178	Cap, Chip	0.1μF	K 25V
CF008	24092291	Cap, Chip	1μF	Z 16V
CF009	24092291	Cap, Chip	1μF	Z 16V
CF010	24092291	Cap, Chip	1μF	Z 16V
CF201	24088088	Cap, Tantalum	47μF	M 20V

LOCATION NUMBER	PART NUMBER	DESCRIPTION		
CF202	24109103	Cap, Chip	0.01μF	K 25V
CF203	24088088	Cap, Tantalum	47μF	M 20V
CF204	24109103	Cap, Chip	0.01μF	K 25V
CF205	24296685	Cap, Tantalum, Chip	6.8μF	M 35V
CF206	24109103	Cap, Chip	0.01μF	K 25V
CF207	24296685	Cap, Tantalum, Chip	6.8μF	M 35V
CF208	24109103	Cap, Chip	0.01μF	K 25V
CF209	24296685	Cap, Tantalum, Chip	6.8μF	M 35V
CF210	24109103	Cap, Chip	0.01μF	K 25V
CF211	24296685	Cap, Tantalum, Chip	6.8μF	M 35V
CF212	24109103	Cap, Chip	0.01μF	K 25V
CL001	24100104	Cap, Chip	0.1μF	Z 25V
CL002	24100104	Cap, Chip	0.1μF	Z 25V
CL003	24100104	Cap, Chip	0.1μF	Z 25V
CL004	24088088	Cap, Tantalum	47μF	M 20V
CL005	24100103	Cap, Chip	0.01μF	Z 50V
CL006	24100103	Cap, Chip	0.01μF	Z 50V
CL008	24100103	Cap, Chip	0.01μF	Z 50V
CL009	24100104	Cap, Chip	0.1μF	Z 25V
CL010	24105200	Cap, Chip	20pF	J 50V
CL011	24105200	Cap, Chip	20pF	J 50V
CL012	24100103	Cap, Chip	0.01μF	Z 50V
CL013	24100103	Cap, Chip	0.01μF	Z 50V
CL014	24105471	Cap, Chip	470pF	J 50V
CL015	24100104	Cap, Chip	0.1μF	Z 25V
CL016	24619103	Cap, Chip	4.7μF	M 25V
CL017	24100104	Cap, Chip	0.1μF	Z 25V
CL018	24100104	Cap, Chip	0.1μF	Z 25V
CL019	24100103	Cap, Chip	0.01μF	Z 50V
CL020	24100104	Cap, Chip	0.1μF	Z 25V
CL021	24100104	Cap, Chip	0.1μF	Z 25V
CL022	24105221	Cap, Chip	220pF	J 50V
CL023	24100104	Cap, Chip	0.1μF	Z 25V
CL024	24100103	Cap, Chip	0.01μF	Z 50V
CL025	24100103	Cap, Chip	0.01μF	Z 50V
CL026	24100103	Cap, Chip	0.01μF	Z 50V
CL027	24105101	Cap, Chip	100pF	J 50V
CL028	24105101	Cap, Chip	100pF	J 50V
CL029	24105101	Cap, Chip	100pF	J 50V
CL030	24105101	Cap, Chip	100pF	J 50V
CL031	24105101	Cap, Chip	100pF	J 50V
CL032	24105101	Cap, Chip	100pF	J 50V
CL033	24105101	Cap, Chip	100pF	J 50V
CL034	24105101	Cap, Chip	100pF	J 50V
CL035	24100103	Cap, Chip	0.01μF	Z 50V
CL036	24100103	Cap, Chip	0.01μF	Z 50V
CL037	24100104	Cap, Chip	0.1μF	Z 25V
CL038	24100103	Cap, Chip	0.01μF	Z 50V
CL039	24100104	Cap, Chip	0.1μF	Z 25V
CL040	24109152	Cap, Chip	1500pF	K 50V
CL041	24100104	Cap, Chip	0.1μF	Z 25V
CL042	24100103	Cap, Chip	0.01μF	Z 50V
CL043	24092441	Cap, Chip	1μF	Z 16V
CL044	24092441	Cap, Chip	1μF	Z 16V
CL045	24092441	Cap, Chip	1μF	Z 16V
CL046	24092441	Cap, Chip	1μF	Z 16V
CL047	24092441	Cap, Chip	1μF	Z 16V
CL049	24619102	Cap, Chip	47μF	M 16V
CL050	24100104	Cap, Chip	0.1μF	Z 25V
CL051	24109152	Cap, Chip	1500pF	K 50V
CL052	24100104	Cap, Chip	0.1μF	Z 25V
CL053	24092441	Cap, Chip	1μF	Z 16V
CL054	24092441	Cap, Chip	1μF	Z 16V
CL055	24092441	Cap, Chip	1μF	Z 16V
CL056	24092441	Cap, Chip	1μF	Z 16V
CL057	24092441	Cap, Chip	1μF	Z 16V
CL058	24092441	Cap, Chip	1μF	Z 16V
CL059	24092441	Cap, Chip	1μF	Z 16V
CL060	24100104	Cap, Chip	0.1μF	Z 25V
CL062	24619102	Cap, Chip	47μF	M 16V
CL063	24100104	Cap, Chip	0.1μF	Z 25V
CL064	24100104	Cap, Chip	0.1μF	Z 25V
CL065	24100104	Cap, Chip	0.1μF	Z 25V
CL066	24100104	Cap, Chip	0.1μF	Z 25V
CL067	24092538	Cap, Chip	1μF	Z 10V

LOCATION NUMBER	PART NUMBER	DESCRIPTION		
		- RESISTORS -		
R409	24011101	Res, Chip	100Ω	J 1/20W
R410	24011332	Res, Chip	3.3kΩ	J 1/20W
R411	24011332	Res, Chip	3.3kΩ	J 1/20W
R412	24011339	Res, Chip	3.3Ω	J 1/20W
R413	24011339	Res, Chip	3.3Ω	J 1/20W
R415	24011101	Res, Chip	100Ω	J 1/20W
R416	24011681	Res, Chip	680Ω	J 1/20W
R417	24011101	Res, Chip	100Ω	J 1/20W
R418	24011681	Res, Chip	680Ω	J 1/20W
R421	24000445	Res, Chip Jumper	0Ω	
R423	24000445	Res, Chip Jumper	0Ω	
R424	24011100	Res, Chip	10Ω	J 1/20W
R425	24011100	Res, Chip	10Ω	J 1/20W
R431	24000445	Res, Chip Jumper	0Ω	
R509	24011101	Res, Chip	100Ω	J 1/20W
R510	24011332	Res, Chip	3.3kΩ	J 1/20W
R511	24011332	Res, Chip	3.3kΩ	J 1/20W
R512	24011339	Res, Chip	3.3Ω	J 1/20W
R513	24011339	Res, Chip	3.3Ω	J 1/20W
R521	24000445	Res, Chip Jumper	0Ω	
R523	24000445	Res, Chip Jumper	0Ω	
R609	24011101	Res, Chip	100Ω	J 1/20W
R610	24011332	Res, Chip	3.3kΩ	J 1/20W
R611	24011332	Res, Chip	3.3kΩ	J 1/20W
R612	24011339	Res, Chip	3.3Ω	J 1/20W
R613	24011339	Res, Chip	3.3Ω	J 1/20W
R621	24000445	Res, Chip Jumper	0Ω	
R623	24000445	Res, Chip Jumper	0Ω	
R624	24000445	Res, Chip Jumper	0Ω	
R705	24011103	Res, Chip	10kΩ	J 1/20W
R706	24011103	Res, Chip	10kΩ	J 1/20W
R709	24011332	Res, Chip	3.3kΩ	J 1/20W
R710	24011152	Res, Chip	1.5kΩ	J 1/20W
R711	24011152	Res, Chip	1.5kΩ	J 1/20W
R712	24011332	Res, Chip	3.3kΩ	J 1/20W
R900	24011101	Res, Chip	100Ω	J 1/20W
R901	24011101	Res, Chip	100Ω	J 1/20W
R902	24011101	Res, Chip	100Ω	J 1/20W
R903	24011101	Res, Chip	100Ω	J 1/20W
R904	24011101	Res, Chip	100Ω	J 1/20W
R905	24011101	Res, Chip	100Ω	J 1/20W
R906	24011101	Res, Chip	100Ω	J 1/20W
R907	24011101	Res, Chip	100Ω	J 1/20W
R908	24011103	Res, Chip	10kΩ	J 1/20W
R909	24011472	Res, Chip	4.7kΩ	J 1/20W
R911	24011472	Res, Chip	4.7kΩ	J 1/20W
R912	24011101	Res, Chip	100Ω	J 1/20W
R913	24011101	Res, Chip	100Ω	J 1/20W
R914	24011101	Res, Chip	100Ω	J 1/20W
R915	24011103	Res, Chip	10kΩ	J 1/20W
R916	24011103	Res, Chip	10kΩ	J 1/20W
R917	24011101	Res, Chip	100Ω	J 1/20W
R918	24011101	Res, Chip	100Ω	J 1/20W
R919	24011101	Res, Chip	100Ω	J 1/20W
R920	24011101	Res, Chip	100Ω	J 1/20W
R925	24011330	Res, Chip	33Ω	J 1/20W
R926	24011330	Res, Chip	33Ω	J 1/20W
R927	24011330	Res, Chip	33Ω	J 1/20W
R928	24011330	Res, Chip	33Ω	J 1/20W
R929	24011330	Res, Chip	33Ω	J 1/20W
R930	24011330	Res, Chip	33Ω	J 1/20W
R931	24011330	Res, Chip	33Ω	J 1/20W
R932	24011330	Res, Chip	33Ω	J 1/20W
R933	24011330	Res, Chip	33Ω	J 1/20W
R934	24011330	Res, Chip	33Ω	J 1/20W
R935	24011330	Res, Chip	33Ω	J 1/20W
R936	24011330	Res, Chip	33Ω	J 1/20W
R937	24011330	Res, Chip	33Ω	J 1/20W
R938	24011330	Res, Chip	33Ω	J 1/20W
R939	24011330	Res, Chip	33Ω	J 1/20W
R940	24011330	Res, Chip	33Ω	J 1/20W
R941	24011330	Res, Chip	33Ω	J 1/20W
R942	24011330	Res, Chip	33Ω	J 1/20W
R943	24011330	Res, Chip	33Ω	J 1/20W

LOCATION NUMBER	PART NUMBER	DESCRIPTION		
R950	24011302	Res, Chip	3kΩ	J 1/20W
R951	24011102	Res, Chip	1kΩ	J 1/20W
R952	24011103	Res, Chip	10kΩ	J 1/20W
R953	24011152	Res, Chip	1.5kΩ	J 1/20W
R954	24011102	Res, Chip	1kΩ	J 1/20W
R961	24011152	Res, Chip	1.5kΩ	J 1/20W
R962	24011151	Res, Chip	150Ω	J 1/20W
R963	24011102	Res, Chip	1kΩ	J 1/20W
R964	24011104	Res, Chip	100kΩ	J 1/20W
*b R965	24000445	Res, Chip Jumper	0Ω	
*a R966	24000445	Res, Chip Jumper	0Ω	
*b R967	24000445	Res, Chip Jumper	0Ω	
*a R968	24000445	Res, Chip Jumper	0Ω	
*a R969	24000445	Res, Chip Jumper	0Ω	
*b R970	24000445	Res, Chip Jumper	0Ω	
R971	24011102	Res, Chip	1kΩ	J 1/20W
R972	24011103	Res, Chip	10kΩ	J 1/20W
R973	24011102	Res, Chip	1kΩ	J 1/20W
R974	24011103	Res, Chip	10kΩ	J 1/20W
R975	24011102	Res, Chip	1kΩ	J 1/20W
R976	24011103	Res, Chip	10kΩ	J 1/20W
R977	24011103	Res, Chip	10kΩ	J 1/20W
RD001	24011125	Res, Chip	1.2MΩ	J 1/20W
RD004	24011101	Res, Chip	100Ω	J 1/20W
RD005	24011101	Res, Chip	100Ω	J 1/20W
RD006	24011101	Res, Chip	100Ω	J 1/20W
RD007	24011101	Res, Chip	100Ω	J 1/20W
RD008	24011101	Res, Chip	100Ω	J 1/20W
RD009	24011470	Res, Chip	47Ω	J 1/20W
RD010	24011470	Res, Chip	47Ω	J 1/20W
RD011	24011470	Res, Chip	47Ω	J 1/20W
RD012	24011470	Res, Chip	47Ω	J 1/20W
RD013	24011470	Res, Chip	47Ω	J 1/20W
RD014	24000571	Res, Chip	1.5kΩ	F 1/16W
RD015	24000560	Res, Chip	910Ω	F 1/16W
RD016	24000571	Res, Chip	1.5kΩ	F 1/16W
RD017	24000560	Res, Chip	910Ω	F 1/16W
RD018	24000571	Res, Chip	1.5kΩ	F 1/16W
RD019	24000573	Res, Chip	1kΩ	F 1/16W
RD020	24000590	Res, Chip	3kΩ	F 1/16W
RD021	24000573	Res, Chip	1kΩ	F 1/16W
RD022	24000590	Res, Chip	3kΩ	F 1/16W
RD023	24000573	Res, Chip	1kΩ	F 1/16W
RD024	24000590	Res, Chip	3kΩ	F 1/16W
RD025	24000573	Res, Chip	1kΩ	F 1/16W
RD026	24011102	Res, Chip	1kΩ	J 1/20W
RD027	24011102	Res, Chip	1kΩ	J 1/20W
RD028	24011103	Res, Chip	10kΩ	J 1/20W
RD029	24011103	Res, Chip	10kΩ	J 1/20W
RD030	24011101	Res, Chip	100Ω	J 1/20W
RD031	24011103	Res, Chip	10kΩ	J 1/20W
RD102	24011330	Res, Chip	33Ω	J 1/20W
RD103	24011330	Res, Chip	33Ω	J 1/20W
RD105	24011102	Res, Chip	1kΩ	J 1/20W
RD111	24011102	Res, Chip	1kΩ	J 1/20W
RD113	24011330	Res, Chip	33Ω	J 1/20W
RD114	24019346	Res, Block	100Ωx4	J 1/16W
RD115	24019346	Res, Block	100Ωx4	J 1/16W
RD116	24019346	Res, Block	100Ωx4	J 1/16W
RD117	24019346	Res, Block	100Ωx4	J 1/16W
RD200	24011560	Res, Chip	56Ω	J 1/20W
RD201	24011560	Res, Chip	56Ω	J 1/20W
RD202	24011560	Res, Chip	56Ω	J 1/20W
RD203	24019346	Res, Block	100Ωx4	J 1/16W
RD204	24019346	Res, Block	100Ωx4	J 1/16W
RD208	24011470	Res, Chip	47Ω	J 1/20W
RD213	24011180	Res, Chip	18Ω	J 1/20W
RD214	24011180	Res, Chip	18Ω	J 1/20W
RD215	24011180	Res, Chip	18Ω	J 1/20W
RD216	24011472	Res, Chip	4.7kΩ	J 1/20W
RD301	24011470	Res, Chip	47Ω	J 1/20W
RD302	24019346	Res, Block	100Ωx4	J 1/16W
RD303	24019346	Res, Block	100Ωx4	J 1/16W
RD304	24011750	Res, Chip	75Ω	J 1/20W
RD305	24011750	Res, Chip	75Ω	J 1/20W

LOCATION NUMBER	PART NUMBER	DESCRIPTION		
RD306	24011750	Res, Chip	75Ω	J 1/20W
RD307	24011102	Res, Chip	1kΩ	J 1/20W
RD308	24011102	Res, Chip	1kΩ	J 1/20W
RD309	24000571	Res, Chip	1.5kΩ	F 1/16W
RD310	24019346	Res, Block	100Ωx4	J 1/16W
RD311	24019346	Res, Block	100Ωx4	J 1/16W
RD312	24019346	Res, Block	100Ωx4	J 1/16W
RD313	24019346	Res, Block	100Ωx4	J 1/16W
RD314	24019346	Res, Block	100Ωx4	J 1/16W
RD315	24019346	Res, Block	100Ωx4	J 1/16W
RD316	24019346	Res, Block	100Ωx4	J 1/16W
RD317	24019346	Res, Block	100Ωx4	J 1/16W
RD318	24019346	Res, Block	100Ωx4	J 1/16W
RD319	24019346	Res, Block	100Ωx4	J 1/16W
RD320	24011105	Res, Chip	1MΩ	J 1/20W
RD400	24011101	Res, Chip	100Ω	J 1/20W
RD401	24011101	Res, Chip	100Ω	J 1/20W
RD402	24011101	Res, Chip	100Ω	J 1/20W
RD403	24011101	Res, Chip	100Ω	J 1/20W
RD404	24011101	Res, Chip	100Ω	J 1/20W
RD405	24011101	Res, Chip	100Ω	J 1/20W
RD406	24011103	Res, Chip	10kΩ	J 1/20W
RD407	24011103	Res, Chip	10kΩ	J 1/20W
RD408	24011103	Res, Chip	10kΩ	J 1/20W
RD409	24011682	Res, Chip	6.8kΩ	J 1/20W
RD410	24011222	Res, Chip	2.2kΩ	J 1/20W
*a RD411	24011100	Res, Chip	10Ω	J 1/20W
*a RD412	24011100	Res, Chip	10Ω	J 1/20W
RD413	24011470	Res, Chip	47Ω	J 1/20W
RD414	24011470	Res, Chip	47Ω	J 1/20W
RD415	24011470	Res, Chip	47Ω	J 1/20W
RD416	24011470	Res, Chip	47Ω	J 1/20W
RD417	24011102	Res, Chip	1kΩ	J 1/20W
RD418	24011102	Res, Chip	1kΩ	J 1/20W
RD419	24011470	Res, Chip	47Ω	J 1/20W
RD420	24011331	Res, Chip	330Ω	J 1/20W
RD421	24011102	Res, Chip	1kΩ	J 1/20W
RD422	24011392	Res, Chip	3.9kΩ	J 1/20W
RD423	24011105	Res, Chip	1MΩ	J 1/20W
RD424	24011470	Res, Chip	47Ω	J 1/20W
RD425	24011470	Res, Chip	47Ω	J 1/20W
RD426	24011470	Res, Chip	47Ω	J 1/20W
RD431	24011101	Res, Chip	100Ω	J 1/20W
RD432	24011101	Res, Chip	100Ω	J 1/20W
*b RD433	24872100	Res, Chip	10Ω	J 1/16W
*b RD434	24872100	Res, Chip	10Ω	J 1/16W
RD435	24011470	Res, Chip	47Ω	J 1/20W
RD437	24011102	Res, Chip	1kΩ	J 1/20W
RD439	24011102	Res, Chip	1kΩ	J 1/20W
RD440	24011102	Res, Chip	1kΩ	J 1/20W
RD441	24011102	Res, Chip	1kΩ	J 1/20W
RD442	24011102	Res, Chip	1kΩ	J 1/20W
RD443	24011102	Res, Chip	1kΩ	J 1/20W
RD444	24011470	Res, Chip	47Ω	J 1/20W
RD500	24011103	Res, Chip	10kΩ	J 1/20W
RD501	24011103	Res, Chip	10kΩ	J 1/20W
RD502	24011102	Res, Chip	1kΩ	J 1/20W
RD503	24011101	Res, Chip	100Ω	J 1/20W
RD600	24019346	Res, Block	100Ωx4	J 1/16W
RD601	24019346	Res, Block	100Ωx4	J 1/16W
RD602	24019346	Res, Block	100Ωx4	J 1/16W
RD603	24019346	Res, Block	100Ωx4	J 1/16W
RD604	24019346	Res, Block	100Ωx4	J 1/16W
RD605	24019346	Res, Block	100Ωx4	J 1/16W
RD606	24019346	Res, Block	100Ωx4	J 1/16W
RD607	24011101	Res, Chip	100Ω	J 1/20W
RD608	24011101	Res, Chip	100Ω	J 1/20W
RD609	24011242	Res, Chip	2.4kΩ	J 1/20W
RD610	24011101	Res, Chip	100Ω	J 1/20W
RD611	24011101	Res, Chip	100Ω	J 1/20W
RD612	24011101	Res, Chip	100Ω	J 1/20W
RD613	24011242	Res, Chip	2.4kΩ	J 1/20W
RD614	24011242	Res, Chip	2.4kΩ	J 1/20W
RD615	24000572	Res, Chip	3.3Ω	F 1/16W
RD616	24000422	Res, Chip	2.2kΩ	F 1/16W

(Note)
*a: TLP450, TLP451
*b: TLP650, TLP651

LOCATION NUMBER	PART NUMBER	DESCRIPTION		
RF001	24872335	Res, Chip	3.3MΩ	J 1/16W
RF002	24000597	Res, Chip	20kΩ	F 1/16W
RF003	24000597	Res, Chip	20kΩ	F 1/16W
RF004	24000594	Res, Chip	12kΩ	F 1/16W
RF005	24000605	Res, Chip	6.8kΩ	F 1/16W
RF006	24019427	Thermister	NTH4G42B104E01	
RF007	24000488	Res, Chip	3.9Ω	J 1/2W
RF008	24011152	Res, Chip	1.5kΩ	J 1/20W
RF009	24872335	Res, Chip	3.3MΩ	J 1/16W
RF010	24000595	Res, Chip	15kΩ	F 1/16W
RF011	24000596	Res, Chip	18kΩ	F 1/16W
RF012	24000593	Res, Chip	10kΩ	F 1/16W
RF013	24872101	Res, Chip	100Ω	J 1/16W
RF014	24019427	Thermister	NTH4G42B104E01	
RF016	24000488	Res, Chip	3.9Ω	J 1/2W
RF017	24011152	Res, Chip	1.5kΩ	J 1/20W
RF021	24019007	Res, Chip	100Ω	J 1W
RF022	24019007	Res, Chip	100Ω	J 1W
RF023	24000570	Res, Chip	470Ω	F 1/16W
RF024	24000573	Res, Chip	1kΩ	F 1/16W
RF025	24872472	Res, Chip	4.7kΩ	J 1/16W
RF050	24000445	Res, Chip Jumper	0Ω	
RF052	24000445	Res, Chip Jumper	0Ω	
RF201	24000590	Res, Chip	3kΩ	F 1/16W
RF202	24000573	Res, Chip	1kΩ	F 1/16W
RF203	24000606	Res, Chip	8.2kΩ	F 1/16W
RF204	24000571	Res, Chip	1.5kΩ	F 1/16W
RF205	24000573	Res, Chip	1kΩ	F 1/16W
RF206	24000605	Res, Chip	6.8kΩ	F 1/16W
RF207	24000573	Res, Chip	1kΩ	F 1/16W
RF208	24000573	Res, Chip	1kΩ	F 1/16W
RL001	24000564	Res, Block	10kΩx4	J 1/16W
RL002	24011103	Res, Chip	10kΩ	J 1/20W
RL003	24011103	Res, Chip	10kΩ	J 1/20W
RL004	24000564	Res, Block	10kΩx4	J 1/16W
RL005	24011103	Res, Chip	10kΩ	J 1/20W
RL006	24011101	Res, Chip	100Ω	J 1/20W
RL007	24011472	Res, Chip	4.7kΩ	J 1/20W
RL008	24011472	Res, Chip	4.7kΩ	J 1/20W
RL009	24011103	Res, Chip	10kΩ	J 1/20W
RL010	24011102	Res, Chip	1kΩ	J 1/20W
RL011	24000564	Res, Block	10kΩx4	J 1/16W
RL012	24011471	Res, Chip	470Ω	J 1/20W
RL013	24011471	Res, Chip	470Ω	J 1/20W
RL014	24011471	Res, Chip	470Ω	J 1/20W
RL015	24011471	Res, Chip	470Ω	J 1/20W
RL016	24011471	Res, Chip	470Ω	J 1/20W
RL017	24011471	Res, Chip	470Ω	J 1/20W
RL018	24011471	Res, Chip	470Ω	J 1/20W
RL019	24011471	Res, Chip	470Ω	J 1/20W
RL020	24019346	Res, Block	100Ωx4	J 1/16W
RL021	24019346	Res, Block	100Ωx4	J 1/16W
RL022	24019346	Res, Block	100Ωx4	J 1/16W
RL023	24019346	Res, Block	100Ωx4	J 1/16W
RL024	24019346	Res, Block	100Ωx4	J 1/16W
RL025	24019346	Res, Block	100Ωx4	J 1/16W
RL026	24019346	Res, Block	100Ωx4	J 1/16W
RL027	24019346	Res, Block	100Ωx4	J 1/16W
RL029	24019346	Res, Block	100Ωx4	J 1/16W
RL030	24019346	Res, Block	100Ωx4	J 1/16W
RL031	24019346	Res, Block	100Ωx4	J 1/16W
RL032	24019346	Res, Block	100Ωx4	J 1/16W
RL033	24019346	Res, Block	100Ωx4	J 1/16W
RL034	24019346	Res, Block	100Ωx4	J 1/16W
RL035	24019346	Res, Block	100Ωx4	J 1/16W
RL036	24019346	Res, Block	100Ωx4	J 1/16W
RL037	24019346	Res, Block	100Ωx4	J 1/16W
RL038	24019346	Res, Block	100Ωx4	J 1/16W
RL040	24019346	Res, Block	100Ωx4	J 1/16W
RL041	24019346	Res, Block	100Ωx4	J 1/16W
RL042	24019346	Res, Block	100Ωx4	J 1/16W
RL043	24019346	Res, Block	100Ωx4	J 1/16W
RL044	24019346	Res, Block	100Ωx4	J 1/16W
RL045	24019346	Res, Block	100Ωx4	J 1/16W
RL046	24019346	Res, Block	100Ωx4	J 1/16W
RL047	24019346	Res, Block	100Ωx4	J 1/16W
RL048	24019346	Res, Block	100Ωx4	J 1/16W
RL049	24019346	Res, Block	100Ωx4	J 1/16W
RL050	24019346	Res, Block	100Ωx4	J 1/16W
RL051	24011302	Res, Chip	3kΩ	J 1/20W
RL052	24011201	Res, Chip	200Ω	J 1/20W
RL053	24011201	Res, Chip	200Ω	J 1/20W
RL054	24011123	Res, Chip	12kΩ	J 1/20W
RL055	24011103	Res, Chip	10kΩ	J 1/20W
RL056	24011103	Res, Chip	10kΩ	J 1/20W
RL057	24011473	Res, Chip	47kΩ	J 1/20W
RL058	24011103	Res, Chip	10kΩ	J 1/20W
RL059	24011101	Res, Chip	100Ω	J 1/20W
RL060	24011681	Res, Chip	680Ω	J 1/20W
RL061	24011103	Res, Chip	10kΩ	J 1/20W
RL062	24011103	Res, Chip	10kΩ	J 1/20W
RL063	24011123	Res, Chip	12kΩ	J 1/20W
RL064	24011123	Res, Chip	12kΩ	J 1/20W
RL065	24011123	Res, Chip	12kΩ	J 1/20W
RL066	24011472	Res, Chip	4.7kΩ	J 1/20W
RL067	24011103	Res, Chip	10kΩ	J 1/20W
RL070	24011103	Res, Chip	10kΩ	J 1/20W
RL073	24011103	Res, Chip	10kΩ	J 1/20W
RL076	24011101	Res, Chip	100Ω	J 1/20W
RL077	24011473	Res, Chip	47kΩ	J 1/20W
RL078	24011103	Res, Chip	10kΩ	J 1/20W
RL080	24011103	Res, Chip	10kΩ	J 1/20W
RL084	24011104	Res, Chip	100kΩ	J 1/20W
RL085	24011472	Res, Chip	4.7kΩ	J 1/20W
RL086	24000564	Res, Block	10kΩx4	J 1/16W
RL087	24011103	Res, Chip	10kΩ	J 1/20W
RL088	24000564	Res, Block	10kΩx4	J 1/16W
RL090	24011103	Res, Chip	10kΩ	J 1/20W
RL091	24011103	Res, Chip	10kΩ	J 1/20W
RL092	24011103	Res, Chip	10kΩ	J 1/20W
RL093	24011103	Res, Chip	10kΩ	J 1/20W
RL094	24011473	Res, Chip	47kΩ	J 1/20W
RL095	24011473	Res, Chip	47kΩ	J 1/20W
RL096	24019346	Res, Block	100Ωx4	J 1/16W
RL097	24011104	Res, Chip	100kΩ	J 1/20W
RL098	24011472	Res, Chip	4.7kΩ	J 1/20W
RL099	24011101	Res, Chip	100Ω	J 1/20W
RL100	24011103	Res, Chip	10kΩ	J 1/20W
RL101	24011104	Res, Chip	100kΩ	J 1/20W
RL102	24011103	Res, Chip	10kΩ	J 1/20W
RL103	24011103	Res, Chip	10kΩ	J 1/20W
RL105	24019346	Res, Block	100Ωx4	J 1/16W
RL106	24011473	Res, Chip	47kΩ	J 1/20W
RL107	24011473	Res, Chip	47kΩ	J 1/20W
RL108	24011101	Res, Chip	100Ω	J 1/20W
RL109	24011681	Res, Chip	680Ω	J 1/20W
RL110	24011472	Res, Chip	4.7kΩ	J 1/20W
RL111	24011472	Res, Chip	4.7kΩ	J 1/20W
RL112	24000564	Res, Block	10kΩx4	J 1/16W
RL113	24872103	Res, Chip	10kΩ	J 1/16W
RL114	24011102	Res, Chip	1kΩ	J 1/20W
RL115	24011102	Res, Chip	1kΩ	J 1/20W
RL117	24011102	Res, Chip	1kΩ	J 1/20W
RL118	24011473	Res, Chip	47kΩ	J 1/20W
*b RL119	24011103	Res, Chip	10kΩ	J 1/20W
		- MISCELLANEOUS -		
*b P401	23903049	Socket	FPC/FFC	
*a P402	23903049	Socket	FPC/FFC	
*b P501	23903049	Socket	FPC/FFC	
*a P502	23903049	Socket	FPC/FFC	
*b P601	23903049	Socket	FPC/FFC	
*a P602	23903049	Socket	FPC/FFC	
P901	70164729	Plug	3P, 1.25mm	
PD001	23713065	Connector	26P	
PD002	23903049	Socket	FPC/FFC	
PD003	23713068	Connector	50P	
PD004	23713066	Connector	2P	
PF001	70164729	Plug	3P, 1.25mm	
PF003	23713067	Connector	3P	
PL001	23368303	Plug	9P	

(Note)
*a: TLP450, TLP451
*b: TLP650, TLP651

LOCATION NUMBER	PART NUMBER	DESCRIPTION	
RF06B	23960136	Bond	
SL001	70145452	Switch	Tact
SL002	70145452	Switch	Tact
SL003	70145452	Switch	Tact
SL004	70145452	Switch	Tact
SL005	70145452	Switch	Tact
SL006	70145452	Switch	Tact
SL007	70145452	Switch	Tact
SL008	70145452	Switch	Tact
SL009	70145452	Switch	Tact
XL001	23153776	Crystal	
Z704	23103823	Filter	TEM2027D
ZD001	23103823	Filter	TEM2027D
ZD002	23103823	Filter	TEM2027D
ZD003	23103823	Filter	TEM2027D
ZD004	23355936	Oscillator	SG82C80M
ZD005	23103013	Filter	TEM2020T
ZD006	23103013	Filter	TEM2020T
ZD100	23103013	Filter	TEM2020T
ZD101	23103013	Filter	TEM2020T
ZD103	23103013	Filter	TEM2020T
ZD104	23103823	Filter	TEM2027D
ZD200	23103013	Filter	TEM2020T
ZD201	23103013	Filter	TEM2020T
ZD202	23103013	Filter	TEM2020T
ZD203	23103823	Filter	TEM2027D
ZD204	23153517	Crystal	CX-51F
ZD205	23103823	Filter	TEM2027D
ZD300	23103013	Filter	TEM2020T
ZD301	23103013	Filter	TEM2020T
ZD302	23103013	Filter	TEM2020T
ZD303	23103823	Filter	TEM2027D
ZD400	23103823	Filter	TEM2027D
ZD401	23103823	Filter	TEM2027D
ZD402	23103823	Filter	TEM2027D
ZD403	23103823	Filter	TEM2027D
ZD404	23103823	Filter	TEM2027D
ZD600	23103823	Filter	TEM2027D
ZD601	23103013	Filter	TEM2020T
ZD602	23103013	Filter	TEM2020T
ZD603	23103013	Filter	TEM2020T
■U0021	23783704	P C Board Assy	RGB
		- INTEGRATED CIRCUITS -	
QB001	23906662	IC	MAX4158ESA
QB002	23906662	IC	MAX4158ESA
QB003	23906662	IC	MAX4158ESA
QB004	23906663	IC	LT1260CS
QB005	23906216	IC	MAX497CSE
QB006	B0489227	IC	TC74ACT244F
QB007	23000957	IC	EL4332CS-ET
QB008	23906665	IC	MAX499CWG
QB016	23906214	IC	M52347FP
QB017	23906234	IC	M62320FP
QB022	70129738	IC	PQ20VZ1U
QB023	23906212	IC	LM2991SX
QB026	B0488995	IC	TC74AC157F
QB027	A6030630	IC	TC7S08F
QB028	A6030630	IC	TC7S08F
		- TRANSISTORS -	
QB009	23314202	Transistor, Chip	2SA1037K
QB010	23314204	Transistor, Chip	2SC2412K
QB011	23314202	Transistor, Chip	2SA1037K
QB012	23314204	Transistor, Chip	2SC2412K
QB013	23314202	Transistor, Chip	2SA1037K
QB014	23314204	Transistor, Chip	2SC2412K
QB015	23314204	Transistor, Chip	2SC2412K
QB018	A6549570	Transistor, Chip	2SA1586-Y
QB019	A6549570	Transistor, Chip	2SA1586-Y
QB020	A6335470	Transistor, Chip	2SC2712-Y
QB021	A6335470	Transistor, Chip	2SC2712-Y
		- DIODES -	
DB001	23357168	Diode, Zener	UDZSTE176.2B
DB002	23357168	Diode, Zener	UDZSTE176.2B
DB003	A7152750	Diode, Chip	1SS226
DB004	A7152750	Diode, Chip	1SS226
DB005	A7152750	Diode, Chip	1SS226
DB006	A7152750	Diode, Chip	1SS226
DB007	A7152750	Diode, Chip	1SS226
DB008	A7152750	Diode, Chip	1SS226
DB009	23357168	Diode, Zener	UDZSTE176.2B
DB010	23357168	Diode, Zener	UDZSTE176.2B
DB011	23357172	Diode, Zener	UDZSTE1710B
DB012	23357172	Diode, Zener	UDZSTE1710B
DB013	23357168	Diode, Zener	UDZSTE176.2B
DB014	23357168	Diode, Zener	UDZSTE176.2B
DB021	23357172	Diode, Zener	UDZSTE1710B
DB022	23357172	Diode, Zener	UDZSTE1710B
DB023	23357172	Diode, Zener	UDZSTE1710B
DB024	23357172	Diode, Zener	UDZSTE1710B
DB025	23357172	Diode, Zener	UDZSTE1710B
DB026	23357172	Diode, Zener	UDZSTE1710B
DB027	23357172	Diode, Zener	UDZSTE1710B
DB028	23357172	Diode, Zener	UDZSTE1710B
DB029	23357172	Diode, Zener	UDZSTE1710B
		- COILS -	
LB001	70132467	Filter	SC200KT
LB002	70132467	Filter	SC200KT
LB003	70132467	Filter	SC200KT
LB004	70132468	Filter	SC800KT
LB005	70132468	Filter	SC800KT
LB006	70132467	Filter	SC200KT
LB007	70132467	Filter	SC200KT
LB008	70132467	Filter	SC200KT
LB009	70132468	Filter	SC800KT
LB010	70132468	Filter	SC800KT
LB011	70132468	Filter	SC800KT
LB012	70132468	Filter	SC800KT
LB013	70132468	Filter	SC800KT
LB014	23303119	Filter	TEM1043
LB015	23303119	Filter	TEM1043
LB016	23303119	Filter	TEM1043
LB017	23303119	Filter	TEM1043
LB018	23103795	Coil, Chip	MMZ2012S301A
LB019	23103795	Coil, Chip	MMZ2012S301A
LB020	23103795	Coil, Chip	MMZ2012S301A
LB021	23103795	Coil, Chip	MMZ2012S301A
LB022	23103795	Coil, Chip	MMZ2012S301A
		- CAPACITORS -	
CB001	24109102	Cap, Chip	1000pF K 50V
CB002	24100104	Cap, Chip	0.1μF Z 25V
CB003	24109102	Cap, Chip	1000pF K 50V
CB004	24100104	Cap, Chip	0.1μF Z 25V
CB005	24109102	Cap, Chip	1000pF K 50V
CB006	24100104	Cap, Chip	0.1μF Z 25V
CB010	24109102	Cap, Chip	1000pF K 50V
CB011	24109102	Cap, Chip	1000pF K 50V
CB012	24109102	Cap, Chip	1000pF K 50V
CB013	24100104	Cap, Chip	0.1μF Z 25V
CB014	24100104	Cap, Chip	0.1μF Z 25V
CB015	24100104	Cap, Chip	0.1μF Z 25V
CB016	24088951	Cap, Chip	6.8μF M 16V
CB017	24088951	Cap, Chip	6.8μF M 16V
CB018	24100104	Cap, Chip	0.1μF Z 25V
CB019	24100104	Cap, Chip	0.1μF Z 25V
CB020	24100104	Cap, Chip	0.1μF Z 25V
CB021	24100104	Cap, Chip	0.1μF Z 25V
CB022	24088951	Cap, Chip	6.8μF M 16V
CB023	24100104	Cap, Chip	0.1μF Z 25V
CB024	24100104	Cap, Chip	0.1μF Z 25V
CB025	24088951	Cap, Chip	6.8μF M 16V
CB026	24088951	Cap, Chip	6.8μF M 16V
CB027	24105220	Cap, Chip	22μF J 50V
CB028	24105220	Cap, Chip	22μF J 50V
CB029	24105220	Cap, Chip	22μF J 50V
CB030	24109102	Cap, Chip	1000pF K 50V
CB031	24109102	Cap, Chip	1000pF K 50V
CB032	24100104	Cap, Chip	0.1μF Z 25V
CB033	24100104	Cap, Chip	0.1μF Z 25V
CB034	24109102	Cap, Chip	1000pF K 50V

LOCATION NUMBER	PART NUMBER	DESCRIPTION		
CB035	24109102	Cap, Chip	1000pF	K 50V
CB036	24100104	Cap, Chip	0.1μF	Z 25V
CB037	24100104	Cap, Chip	0.1μF	Z 25V
CB038	24619103	Cap, Chip	4.7μF	M 25V
CB039	24619103	Cap, Chip	4.7μF	M 25V
CB040	24619103	Cap, Chip	4.7μF	M 25V
CB041	24619113	Cap, Chip	1μF	M 50V
CB042	24619100	Cap, Chip	10μF	M 16V
CB043	24105221	Cap, Chip	220pF	J 50V
CB044	24109103	Cap, Chip	0.01μF	K 25V
CB045	24088951	Cap, Chip	6.8μF	M 16V
CB046	24105101	Cap, Chip	100pF	J 50V
CB047	24092441	Cap, Chip	1μF	Z 16V
CB048	24092441	Cap, Chip	1μF	Z 16V
CB049	24088951	Cap, Chip	6.8μF	M 16V
CB050	24088951	Cap, Chip	6.8μF	M 16V
CB051	24092441	Cap, Chip	1μF	Z 16V
CB052	24092441	Cap, Chip	1μF	Z 16V
CB053	24100104	Cap, Chip	0.1μF	Z 25V
CB054	24100104	Cap, Chip	0.1μF	Z 25V
CB055	24619100	Cap, Chip	10μF	M 16V
CB056	24100104	Cap, Chip	0.1μF	Z 25V
CB057	24619100	Cap, Chip	10μF	M 16V
CB058	24100104	Cap, Chip	0.1μF	Z 25V
CB059	24619102	Cap, Chip	47μF	M 16V
CB060	24088953	Cap, Chip	33μF	M 16V
CB061	24619102	Cap, Chip	47μF	M 16V
CB062	24088953	Cap, Chip	33μF	M 16V
CB066	24092441	Cap, Chip	1μF	Z 16V
CB067	24092441	Cap, Chip	1μF	Z 16V
CB068	24092441	Cap, Chip	1μF	Z 16V
CB069	24092441	Cap, Chip	1μF	Z 16V
CB070	24092441	Cap, Chip	1μF	Z 16V
CB071	24092441	Cap, Chip	1μF	Z 16V
CB072	24088978	Cap, Chip	22μF	M 20V
CB073	24088978	Cap, Chip	22μF	M 20V
CB074	24092441	Cap, Chip	1μF	Z 16V
CB075	24092441	Cap, Chip	1μF	Z 16V
		- RESISTORS -		
RB001	24871750	Res, Chip	75Ω	J 1/8W
RB002	24871750	Res, Chip	75Ω	J 1/8W
RB003	24871750	Res, Chip	75Ω	J 1/8W
RB004	24872103	Res, Chip	10kΩ	J 1/16W
RB005	24872103	Res, Chip	10kΩ	J 1/16W
RB006	24011680	Res, Chip	68Ω	J 1/20W
RB007	24011750	Res, Chip	75Ω	J 1/20W
RB008	24011103	Res, Chip	10kΩ	J 1/20W
RB009	24011680	Res, Chip	68Ω	J 1/20W
RB010	24011750	Res, Chip	75Ω	J 1/20W
RB011	24011103	Res, Chip	10kΩ	J 1/20W
RB012	24011680	Res, Chip	68Ω	J 1/20W
RB013	24011750	Res, Chip	75Ω	J 1/20W
RB014	24011103	Res, Chip	10kΩ	J 1/20W
RB015	24011560	Res, Chip	56Ω	J 1/20W
RB016	24000450	Res, Chip	100Ω	F 1/16W
RB017	24000461	Res, Chip	330Ω	F 1/16W
RB018	24011560	Res, Chip	56Ω	J 1/20W
RB019	24000450	Res, Chip	100Ω	F 1/16W
RB020	24000461	Res, Chip	330Ω	F 1/16W
RB021	24011560	Res, Chip	56Ω	J 1/20W
RB022	24000450	Res, Chip	100Ω	F 1/16W
RB023	24000461	Res, Chip	330Ω	F 1/16W
RB024	24011220	Res, Chip	22Ω	J 1/20W
RB025	24011222	Res, Chip	2.2kΩ	J 1/20W
RB026	24011220	Res, Chip	22Ω	J 1/20W
RB027	24011222	Res, Chip	2.2kΩ	J 1/20W
RB028	24011220	Res, Chip	22Ω	J 1/20W
RB029	24011222	Res, Chip	2.2kΩ	J 1/20W
RB030	24011220	Res, Chip	22Ω	J 1/20W
RB031	24011222	Res, Chip	2.2kΩ	J 1/20W
RB032	24872750	Res, Chip	75Ω	J 1/16W
RB033	24872750	Res, Chip	75Ω	J 1/16W
RB034	24872750	Res, Chip	75Ω	J 1/16W
RB035	24872750	Res, Chip	75Ω	J 1/16W
RB036	24872103	Res, Chip	10kΩ	J 1/16W

LOCATION NUMBER	PART NUMBER	DESCRIPTION		
RB037	24872103	Res, Chip	10kΩ	J 1/16W
RB038	24872103	Res, Chip	10kΩ	J 1/16W
RB039	24872104	Res, Chip	100kΩ	J 1/16W
RB040	24872104	Res, Chip	100kΩ	J 1/16W
RB041	24872101	Res, Chip	100Ω	J 1/16W
RB042	24872101	Res, Chip	100Ω	J 1/16W
RB043	24872221	Res, Chip	220Ω	J 1/16W
RB044	24872221	Res, Chip	220Ω	J 1/16W
RB045	24011390	Res, Chip	39Ω	J 1/20W
RB046	24011390	Res, Chip	39Ω	J 1/20W
RB047	24011390	Res, Chip	39Ω	J 1/20W
RB048	24000426	Res, Chip	1.1Ω	F 1/16W
RB049	24000426	Res, Chip	1.1Ω	F 1/16W
RB050	24000426	Res, Chip	1.1Ω	F 1/16W
RB051	24000426	Res, Chip	1.1Ω	F 1/16W
RB052	24000426	Res, Chip	1.1Ω	F 1/16W
RB053	24000426	Res, Chip	1.1Ω	F 1/16W
RB054	24011220	Res, Chip	22Ω	J 1/20W
RB055	24011220	Res, Chip	22Ω	J 1/20W
RB056	24011220	Res, Chip	22Ω	J 1/20W
RB057	24011750	Res, Chip	75Ω	J 1/20W
RB058	24011750	Res, Chip	75Ω	J 1/20W
RB059	24011750	Res, Chip	75Ω	J 1/20W
RB063	24011101	Res, Chip	100Ω	J 1/20W
RB064	24872820	Res, Chip	82Ω	J 1/16W
RB065	24011103	Res, Chip	10kΩ	J 1/20W
RB066	24011220	Res, Chip	22Ω	J 1/20W
RB067	24011103	Res, Chip	10kΩ	J 1/20W
RB068	24011220	Res, Chip	22Ω	J 1/20W
RB069	24011103	Res, Chip	10kΩ	J 1/20W
RB070	24011220	Res, Chip	22Ω	J 1/20W
RB071	24011103	Res, Chip	10kΩ	J 1/20W
RB072	24011220	Res, Chip	22Ω	J 1/20W
RB073	24872820	Res, Chip	82Ω	J 1/16W
RB074	24872820	Res, Chip	82Ω	J 1/16W
RB075	24011220	Res, Chip	22Ω	J 1/20W
RB076	24011220	Res, Chip	22Ω	J 1/20W
RB077	24011103	Res, Chip	10kΩ	J 1/20W
RB078	24011103	Res, Chip	10kΩ	J 1/20W
RB079	24011220	Res, Chip	22Ω	J 1/20W
RB080	24011222	Res, Chip	2.2kΩ	J 1/20W
RB081	24011220	Res, Chip	22Ω	J 1/20W
RB082	24011222	Res, Chip	2.2kΩ	J 1/20W
RB083	24011820	Res, Chip	82Ω	J 1/20W
RB084	24011222	Res, Chip	2.2kΩ	J 1/20W
RB085	24011220	Res, Chip	22Ω	J 1/20W
RB086	24872750	Res, Chip	75Ω	J 1/16W
RB087	24011220	Res, Chip	22Ω	J 1/20W
RB088	24872750	Res, Chip	75Ω	J 1/16W
RB089	24011220	Res, Chip	22Ω	J 1/20W
RB090	24872750	Res, Chip	75Ω	J 1/16W
RB091	24011101	Res, Chip	100Ω	J 1/20W
RB092	24872750	Res, Chip	75Ω	J 1/16W
RB093	24872750	Res, Chip	75Ω	J 1/16W
RB094	24872750	Res, Chip	75Ω	J 1/16W
RB095	24872821	Res, Chip	820Ω	J 1/16W
RB096	24011220	Res, Chip	22Ω	J 1/20W
RB097	24872681	Res, Chip	680Ω	J 1/16W
RB098	24011470	Res, Chip	47Ω	J 1/20W
RB099	24011103	Res, Chip	10kΩ	J 1/20W
RB100	24872821	Res, Chip	820Ω	J 1/16W
RB101	24011220	Res, Chip	22Ω	J 1/20W
RB102	24872681	Res, Chip	680Ω	J 1/16W
RB103	24011470	Res, Chip	47Ω	J 1/20W
RB104	24011103	Res, Chip	10kΩ	J 1/20W
RB105	24872821	Res, Chip	820Ω	J 1/16W
RB106	24011220	Res, Chip	22Ω	J 1/20W
RB107	24872681	Res, Chip	680Ω	J 1/16W
RB108	24011470	Res, Chip	47Ω	J 1/20W
RB109	24011103	Res, Chip	10kΩ	J 1/20W
RB110	24011100	Res, Chip	10Ω	J 1/20W
RB111	24011100	Res, Chip	10Ω	J 1/20W
RB112	24011100	Res, Chip	10Ω	J 1/20W
RB113	24872750	Res, Chip	75Ω	J 1/16W
RB114	24011331	Res, Chip	330Ω	J 1/20W

LOCATION NUMBER	PART NUMBER	DESCRIPTION		
RB115	24872560	Res, Chip	56Ω	J 1/16W
RB116	24872331	Res, Chip	330Ω	J 1/16W
RB117	24872560	Res, Chip	56Ω	J 1/16W
RB118	24011104	Res, Chip	100kΩ	J 1/20W
RB119	24011101	Res, Chip	100Ω	J 1/20W
RB120	24872821	Res, Chip	820Ω	J 1/16W
RB121	24011220	Res, Chip	22Ω	J 1/20W
RB122	24000419	Res, Chip	4.3kΩ	F 1/16W
RB123	24011101	Res, Chip	100Ω	J 1/20W
RB124	24011101	Res, Chip	100Ω	J 1/20W
RB125	24000405	Res, Chip	62kΩ	F 1/16W
RB126	24011472	Res, Chip	4.7kΩ	J 1/20W
RB127	24011472	Res, Chip	4.7kΩ	J 1/20W
RB128	24011472	Res, Chip	4.7kΩ	J 1/20W
RB129	24011472	Res, Chip	4.7kΩ	J 1/20W
RB130	24011101	Res, Chip	100Ω	J 1/20W
RB131	24011101	Res, Chip	100Ω	J 1/20W
RB132	24011101	Res, Chip	100Ω	J 1/20W
RB133	24011101	Res, Chip	100Ω	J 1/20W
RB134	24011101	Res, Chip	100Ω	J 1/20W
RB135	24011101	Res, Chip	100Ω	J 1/20W
RB136	24011101	Res, Chip	100Ω	J 1/20W
RB137	24011101	Res, Chip	100Ω	J 1/20W
RB138	24011101	Res, Chip	100Ω	J 1/20W
RB139	24011101	Res, Chip	100Ω	J 1/20W
RB140	24011101	Res, Chip	100Ω	J 1/20W
RB141	24011101	Res, Chip	100Ω	J 1/20W
RB142	24011101	Res, Chip	100Ω	J 1/20W
RB143	24011101	Res, Chip	100Ω	J 1/20W
RB144	24011101	Res, Chip	100Ω	J 1/20W
RB146	24011101	Res, Chip	100Ω	J 1/20W
RB147	24011101	Res, Chip	100Ω	J 1/20W
RB149	24011101	Res, Chip	100Ω	J 1/20W
RB150	24011103	Res, Chip	10kΩ	J 1/20W
RB151	24872473	Res, Chip	47kΩ	J 1/16W
RB152	24872223	Res, Chip	22kΩ	J 1/16W
RB153	24872223	Res, Chip	22kΩ	J 1/16W
RB154	24872101	Res, Chip	100Ω	J 1/16W
RB155	24872182	Res, Chip	1.8kΩ	J 1/16W
RB156	24872101	Res, Chip	100Ω	J 1/16W
RB157	24872473	Res, Chip	47kΩ	J 1/16W
RB158	24872223	Res, Chip	22kΩ	J 1/16W
RB159	24872101	Res, Chip	100Ω	J 1/16W
RB160	24872223	Res, Chip	22kΩ	J 1/16W
RB161	24872182	Res, Chip	1.8kΩ	J 1/16W
RB162	24872101	Res, Chip	100Ω	J 1/16W
RB163	24872102	Res, Chip	1kΩ	J 1/16W
RB164	24872104	Res, Chip	100kΩ	J 1/16W
RB165	24872182	Res, Chip	1.8kΩ	J 1/16W
RB166	24872101	Res, Chip	100Ω	J 1/16W
RB167	24872102	Res, Chip	1kΩ	J 1/16W
RB168	24872104	Res, Chip	100kΩ	J 1/16W
RB169	24872182	Res, Chip	1.8kΩ	J 1/16W
RB170	24872101	Res, Chip	100Ω	J 1/16W
RB171	24000590	Res, Chip	3kΩ	F 1/16W
RB172	24000573	Res, Chip	1kΩ	F 1/16W
RB173	24000558	Res, Chip	750Ω	F 1/16W
RB174	24000458	Res, Chip	240Ω	F 1/16W
RB175	24011101	Res, Chip	100Ω	J 1/20W
RB201	24011104	Res, Chip	100kΩ	J 1/20W
RB202	24011470	Res, Chip	47Ω	J 1/20W
RB203	24011104	Res, Chip	100kΩ	J 1/20W
RB204	24011470	Res, Chip	47Ω	J 1/20W
RB205	24011104	Res, Chip	100kΩ	J 1/20W
RB206	24011470	Res, Chip	47Ω	J 1/20W
RB207	24011104	Res, Chip	100kΩ	J 1/20W
RB208	24011470	Res, Chip	47Ω	J 1/20W
RB209	24011104	Res, Chip	100kΩ	J 1/20W
RB210	24011470	Res, Chip	47Ω	J 1/20W
		- MISCELLANEOUS -		
PB001	23903047	Socket	DSUB	
PB002	23365971	Earphono Jack		
PB003	23903047	Socket	DSUB	
PB004	23365971	Earphono Jack		
PB005	23713069	Connector	50P	
PB006	23903049	Socket	FPC/FFC	
■U0022	23783705	P C Board Assy	Input	
		- INTEGRATED CIRCUITS -		
QA01	70128490	IC	MM1031M	
QA02	70128503	IC	MM1041XMR	
QA03	70128490	IC	MM1031M	
QA06	23905590	IC	M52055FP	
QA09	23000958	IC	M62420FP-T	
QA10	23906399	IC	LA4425A	
QA11	A6030630	IC	TC7S08F	
QA12	A6030630	IC	TC7S08F	
QA13	23906234	IC	M62320FP	
QA20	70129738	IC	PQ20VZ1U	
QA21	70129738	IC	PQ20VZ1U	
QA22	70129738	IC	PQ20VZ1U	
QA23	A6030630	IC	TC7S08F	
		- TRANSISTORS -		
QA04	A6365620	Transistor, Chip	2SC4116-Y	
QA05	A6365620	Transistor, Chip	2SC4116-Y	
QA07	A6549570	Transistor, Chip	2SA1586-Y	
QA08	A6549570	Transistor, Chip	2SA1586-Y	
QA14	23314202	Transistor, Chip	2SA1037K	
QA15	23314202	Transistor, Chip	2SA1037K	
QA16	23314202	Transistor, Chip	2SA1037K	
		- DIODES -		
DA01	23357172	Diode, Zener	UDZSTE1710B	
DA02	23357172	Diode, Zener	UDZSTE1710B	
DA03	23357172	Diode, Zener	UDZSTE1710B	
DA04	23357172	Diode, Zener	UDZSTE1710B	
DA05	23357172	Diode, Zener	UDZSTE1710B	
DA06	23357168	Diode, Zener	UDZSTE176.2B	
DA08	23357168	Diode, Zener	UDZSTE176.2B	
DA09	23357168	Diode, Zener	UDZSTE176.2B	
		- COILS -		
LA01	23245839	Coil, Chip	TRF4560CB	
LA02	23245847	Coil, Chip	TRF4330CC	
LA03	23245847	Coil, Chip	TRF4330CC	
LA04	23245847	Coil, Chip	TRF4330CC	
LA05	70132468	Filter	SC800KT	
LA06	70132468	Filter	SC800KT	
LA07	70132468	Filter	SC800KT	
LA08	70132468	Filter	SC800KT	
LA09	70132468	Filter	SC800KT	
LA10	23245847	Coil, Chip	TRF4330CC	
LA11	23303119	Filter	TEM1043	
LA12	23303119	Filter	TEM1043	
		- CAPACITORS -		
CA01	24619102	Cap, Chip	47μF	M 16V
CA02	24100104	Cap, Chip	0.1μF	Z 25V
CA03	24619113	Cap, Chip	1μF	M 50V
CA04	24619102	Cap, Chip	47μF	M 16V
CA05	24092441	Cap, Chip	1μF	Z 16V
CA06	24092441	Cap, Chip	1μF	Z 16V
CA07	24619102	Cap, Chip	47μF	M 16V
CA08	24088079	Cap, Chip	10μF	M 10V
CA09	24088079	Cap, Chip	10μF	M 10V
CA10	24088079	Cap, Chip	10μF	M 10V
CA11	24100104	Cap, Chip	0.1μF	Z 25V
CA12	24619100	Cap, Chip	10μF	M 16V
CA13	24100104	Cap, Chip	0.1μF	Z 25V
CA14	24619100	Cap, Chip	10μF	M 16V
CA15	24619100	Cap, Chip	10μF	M 16V
CA16	24619100	Cap, Chip	10μF	M 16V
CA17	24619100	Cap, Chip	10μF	M 16V
CA18	24100104	Cap, Chip	0.1μF	Z 25V
CA19	24619102	Cap, Chip	47μF	M 16V
CA20	24100104	Cap, Chip	0.1μF	Z 25V
CA21	24619102	Cap, Chip	47μF	M 16V
CA22	24092538	Cap, Chip	1μF	Z 10V
CA23	24815223	Cap, Chip	0.022μF	K 50V
CA24	24815473	Cap, Chip	0.047μF	K 50V
CA25	24815333	Cap, Chip	0.033μF	K 50V
CA26	24092538	Cap, Chip	1μF	Z 10V
CA27	24815223	Cap, Chip	0.022μF	K 50V

LOCATION NUMBER	PART NUMBER	DESCRIPTION		
CA28	24815473	Cap, Chip	0.047μF	K 50V
CA29	24815333	Cap, Chip	0.033μF	K 50V
CA30	24619100	Cap, Chip	10μF	M 16V
CA31	24100104	Cap, Chip	0.1μF	Z 25V
CA32	24815102	Cap, Chip	1000pF	K 50V
CA33	24619113	Cap, Chip	1μF	M 50V
CA34	24619113	Cap, Chip	1μF	M 50V
CA35	24666331	Cap, Electrolytic	330μF	M 16V
CA36	24666331	Cap, Electrolytic	330μF	M 16V
CA37	24619102	Cap, Chip	47μF	M 16V
CA38	24100104	Cap, Chip	0.1μF	Z 25V
CA39	24100104	Cap, Chip	0.1μF	Z 25V
CA40	24100104	Cap, Chip	0.1μF	Z 25V
CA41	24619102	Cap, Chip	47μF	M 16V
CA42	24619102	Cap, Chip	47μF	M 16V
CA43	24619102	Cap, Chip	47μF	M 16V
CA44	24619100	Cap, Chip	10μF	M 16V
CA45	24100104	Cap, Chip	0.1μF	Z 25V
CA53	24667221	Cap, Electrolytic	220μF	M 25V
CA54	24100104	Cap, Chip	0.1μF	Z 25V
CA55	24295106	Cap, Chip	10μF	M 25V
CA56	24100104	Cap, Chip	0.1μF	Z 25V
CA57	24295106	Cap, Chip	10μF	M 25V
CA58	24088953	Cap, Chip	33μF	M 16V
CA59	24100104	Cap, Chip	0.1μF	Z 25V
CA60	24088953	Cap, Chip	33μF	M 16V
CA61	24100104	Cap, Chip	0.1μF	Z 25V
CA62	24088953	Cap, Chip	33μF	M 16V
CA63	24100104	Cap, Chip	0.1μF	Z 25V
CA64	24100104	Cap, Chip	0.1μF	Z 25V
CA65	24100104	Cap, Chip	0.1μF	Z 25V
CA66	24100104	Cap, Chip	0.1μF	Z 25V
CA67	24667221	Cap, Electrolytic	220μF	M 25V
CA68	24667221	Cap, Electrolytic	220μF	M 25V
CA69	24667221	Cap, Electrolytic	220μF	M 25V
CA70	24667221	Cap, Electrolytic	220μF	M 25V
CA71	24665471	Cap, Electrolytic	470μF	M 10V
CA72	24100104	Cap, Chip	0.1μF	Z 25V
CA73	24665471	Cap, Electrolytic	470μF	M 10V
CA74	24100104	Cap, Chip	0.1μF	Z 25V
		- RESISTORS -		
RA01	24871750	Res, Chip	75Ω	J 1/8W
RA02	24871750	Res, Chip	75Ω	J 1/8W
RA03	24011473	Res, Chip	47kΩ	J 1/20W
RA04	24011473	Res, Chip	47kΩ	J 1/20W
RA07	24011470	Res, Chip	47Ω	J 1/20W
RA09	24011101	Res, Chip	100Ω	J 1/20W
RA12	24011470	Res, Chip	47Ω	J 1/20W
RA14	24011101	Res, Chip	100Ω	J 1/20W
RA17	24011470	Res, Chip	47Ω	J 1/20W
RA19	24011101	Res, Chip	100Ω	J 1/20W
RA20	24011333	Res, Chip	33kΩ	J 1/20W
RA21	24011473	Res, Chip	47kΩ	J 1/20W
RA22	24011101	Res, Chip	100Ω	J 1/20W
RA23	24011222	Res, Chip	2.2kΩ	J 1/20W
RA24	24011101	Res, Chip	100Ω	J 1/20W
RA25	24011333	Res, Chip	33kΩ	J 1/20W
RA26	24011473	Res, Chip	47kΩ	J 1/20W
RA27	24011101	Res, Chip	100Ω	J 1/20W
RA28	24011222	Res, Chip	2.2kΩ	J 1/20W
RA29	24011101	Res, Chip	100Ω	J 1/20W
RA30	24011101	Res, Chip	100Ω	J 1/20W
RA31	24011332	Res, Chip	3.3kΩ	J 1/20W
RA32	24011101	Res, Chip	100Ω	J 1/20W
RA33	24011332	Res, Chip	3.3kΩ	J 1/20W
RA34	24011101	Res, Chip	100Ω	J 1/20W
RA35	24011101	Res, Chip	100Ω	J 1/20W
RA36	24011472	Res, Chip	4.7kΩ	J 1/20W
RA37	24011472	Res, Chip	4.7kΩ	J 1/20W
RA38	24011152	Res, Chip	1.5kΩ	J 1/20W
RA39	24011471	Res, Chip	470Ω	J 1/20W
RA40	24011152	Res, Chip	1.5kΩ	J 1/20W
RA41	24011471	Res, Chip	470Ω	J 1/20W
RA42	24011103	Res, Chip	10kΩ	J 1/20W
RA43	24011104	Res, Chip	100kΩ	J 1/20W
RA44	24011103	Res, Chip	10kΩ	J 1/20W
RA45	24011101	Res, Chip	100Ω	J 1/20W
RA46	24011101	Res, Chip	100Ω	J 1/20W
RA47	24011681	Res, Chip	680Ω	J 1/20W
RA48	24011103	Res, Chip	10kΩ	J 1/20W
RA49	24011103	Res, Chip	10kΩ	J 1/20W
RA50	24011103	Res, Chip	10kΩ	J 1/20W
RA51	24011103	Res, Chip	10kΩ	J 1/20W
RA52	24011103	Res, Chip	10kΩ	J 1/20W
RA53	24011332	Res, Chip	3.3kΩ	J 1/20W
RA54	24011332	Res, Chip	3.3kΩ	J 1/20W
RA55	24011332	Res, Chip	3.3kΩ	J 1/20W
RA56	24011101	Res, Chip	100Ω	J 1/20W
RA57	24011101	Res, Chip	100Ω	J 1/20W
RA58	24011101	Res, Chip	100Ω	J 1/20W
RA59	24011101	Res, Chip	100Ω	J 1/20W
RA60	24011103	Res, Chip	10kΩ	J 1/20W
RA61	24011103	Res, Chip	10kΩ	J 1/20W
RA62	24011472	Res, Chip	4.7kΩ	J 1/20W
RA63	24011472	Res, Chip	4.7kΩ	J 1/20W
RA64	24011101	Res, Chip	100Ω	J 1/20W
RA65	24011222	Res, Chip	2.2kΩ	J 1/20W
RA66	24011222	Res, Chip	2.2kΩ	J 1/20W
RA67	24011222	Res, Chip	2.2kΩ	J 1/20W
RA74	24000606	Res, Chip	8.2kΩ	F 1/16W
RA75	24000573	Res, Chip	1kΩ	F 1/16W
RA76	24019007	Res, Chip	100Ω	J 1W
RA77	24000449	Res, Chip	6.2kΩ	F 1/16W
RA78	24000573	Res, Chip	1kΩ	F 1/16W
RA79	24000590	Res, Chip	3kΩ	F 1/16W
RA80	24000573	Res, Chip	1kΩ	F 1/16W
RA81	24871750	Res, Chip	75Ω	J 1/8W
RA82	24011101	Res, Chip	100Ω	J 1/20W
RA86	24011103	Res, Chip	10kΩ	J 1/20W
RA87	24000488	Res, Chip	3.9Ω	J 1/2W
RA88	24000488	Res, Chip	3.9Ω	J 1/2W
RA89	24000488	Res, Chip	3.9Ω	J 1/2W
RA90	24000445	Res, Chip Jumper	0Ω	
		- MISCELLANEOUS -		
PA01	23365684	Phono Jack	S-VHS, 4P	
PA02	23365275	Phono Jack		
PA03	23903048	Socket	FPC/FFC	
PA04	23368672	Plug	26P	
PA05	23903048	Socket	FPC/FFC	
■U007	23784175	P C Board Assy	Sub Digital	
		- INTEGRATED CIRCUITS -		
QD700	23906863	IC	SN74LVC157AP	
QF503	B0488399	IC	TC74HC123AF	
		- TRANSISTORS -		
QF501	A6549570	Transistor, Chip	2SA1586-Y	
QF502	A6549570	Transistor, Chip	2SA1586-Y	
		- DIODES -		
DF530	23118041	Diode, Chip	MA111	
DF531	23118041	Diode, Chip	MA111	
		- CAPACITORS -		
CD700	24088079	Cap, Chip	10μF	M 10V
CD701	24100104	Cap, Chip	0.1μF	Z 25V
CF510	24092441	Cap, Chip	1μF	Z 16V
CF520	24092441	Cap, Chip	1μF	Z 16V
CF530	24092178	Cap, Chip	0.1μF	K 25V
CF531	24092441	Cap, Chip	1μF	Z 16V
CF532	24092441	Cap, Chip	1μF	Z 16V
		- RESISTORS -		
RD700	24011470	Res, Chip	47Ω	J 1/20W
RD701	24011101	Res, Chip	100Ω	J 1/20W
RF510	24011103	Res, Chip	10kΩ	J 1/20W
RF511	24011104	Res, Chip	100kΩ	J 1/20W
RF513	24011223	Res, Chip	22kΩ	J 1/20W
RF520	24011103	Res, Chip	10kΩ	J 1/20W
RF521	24011104	Res, Chip	100kΩ	J 1/20W
RF523	24011223	Res, Chip	22kΩ	J 1/20W
RF530	24011823	Res, Chip	82kΩ	J 1/20W
RF531	24011823	Res, Chip	82kΩ	J 1/20W
		- MISCELLANEOUS -		

LOCATION NUMBER	PART NUMBER	DESCRIPTION		
ND710	23969797	Tape		
ND711	23969797	Tape		
ZD700	23103823	Filter	TEM2027D	
■U0031	23783706	P C Board Assy	CAMSW(TLP451, TLP651)	
		- INTEGRATED CIRCUITS -		
QH001	70129738	IC	PQ20VZ1U	
QH002	70129738	IC	PQ20VZ1U	
QH003	70129738	IC	PQ20VZ1U	
QH004	A6030630	IC	TC7S08F	
QH005	23906234	IC	M62320FP	
QH006	23906782	IC	TSOP1838	
QH041	A6030630	IC	TC7S08F	
		- DIODES -		
DH001	23358539	Diode, LED	SML-020MLTT6	
DH401	23357168	Diode, Zener	UDZSTE176.2B	
DH501	23357168	Diode, Zener	UDZSTE176.2B	
DH502	23357168	Diode, Zener	UDZSTE176.2B	
DH503	23357168	Diode, Zener	UDZSTE176.2B	
DH504	23357168	Diode, Zener	UDZSTE176.2B	
DH505	23357168	Diode, Zener	UDZSTE176.2B	
DH506	23357168	Diode, Zener	UDZSTE176.2B	
DH507	23357168	Diode, Zener	UDZSTE176.2B	
DH508	23357168	Diode, Zener	UDZSTE176.2B	
DH509	A7150800	Diode, Chip	1SS187	
DH510	23357168	Diode, Zener	UDZSTE176.2B	
DH511	23357168	Diode, Zener	UDZSTE176.2B	
DH601	A7150800	Diode, Chip	1SS187	
DH602	23357168	Diode, Zener	UDZSTE176.2B	
		- CAPACITORS -		
CH101	24295106	Cap, Chip	10μF	M 25V
CH102	24092178	Cap, Chip	0.1μF	K 25V
CH103	24092178	Cap, Chip	0.1μF	K 25V
CH104	24295106	Cap, Chip	10μF	M 25V
CH201	24295106	Cap, Chip	10μF	M 25V
CH202	24092178	Cap, Chip	0.1μF	K 25V
CH203	24092178	Cap, Chip	0.1μF	K 25V
CH204	24088951	Cap, Chip	6.8μF	M 16V
CH301	24088951	Cap, Chip	6.8μF	M 16V
CH302	24092178	Cap, Chip	0.1μF	K 25V
CH303	24092178	Cap, Chip	0.1μF	K 25V
CH304	24088951	Cap, Chip	6.8μF	M 16V
CH401	24092178	Cap, Chip	0.1μF	K 25V
CH402	24092178	Cap, Chip	0.1μF	K 25V
CH501	24092178	Cap, Chip	0.1μF	K 25V
CH601	24088948	Cap, Chip, Tantalum	47μF	M 10V
CH602	24781152	Cap, Chip	1500pF	J 50V
		- RESISTORS -		
RH101	24000593	Res, Chip	10kΩ	F 1/16W
RH102	24000573	Res, Chip	1kΩ	F 1/16W
RH201	24000449	Res, Chip	6.2kΩ	F 1/16W
RH202	24000573	Res, Chip	1kΩ	F 1/16W
RH203	24019007	Res, Chip	100Ω	J 1W
RH301	24000422	Res, Chip	2.2kΩ	F 1/16W
RH302	24000573	Res, Chip	1kΩ	F 1/16W
RH501	24872472	Res, Chip	4.7kΩ	J 1/16W
RH502	24872472	Res, Chip	4.7kΩ	J 1/16W
RH503	24872472	Res, Chip	4.7kΩ	J 1/16W
RH504	24872472	Res, Chip	4.7kΩ	J 1/16W
RH506	24872472	Res, Chip	4.7kΩ	J 1/16W
RH507	24872472	Res, Chip	4.7kΩ	J 1/16W
RH508	24872472	Res, Chip	4.7kΩ	J 1/16W
RH509	24872101	Res, Chip	100Ω	J 1/16W
RH510	24872101	Res, Chip	100Ω	J 1/16W
RH511	24872101	Res, Chip	100Ω	J 1/16W
RH512	24872101	Res, Chip	100Ω	J 1/16W
RH513	24872101	Res, Chip	100Ω	J 1/16W
RH514	24872101	Res, Chip	100Ω	J 1/16W
RH515	24872221	Res, Chip	220Ω	J 1/16W
RH516	24872101	Res, Chip	100Ω	J 1/16W
RH517	24872101	Res, Chip	100Ω	J 1/16W
RH518	24872101	Res, Chip	100Ω	J 1/16W
RH601	24872101	Res, Chip	100Ω	J 1/16W
RH602	24872472	Res, Chip	4.7kΩ	J 1/16W
		- MISCELLANEOUS -		

LOCATION NUMBER	PART NUMBER	DESCRIPTION		
FH001	23144614	Fuse	125V, 0.5A	
PH002	23368708	Plug	20P, 1mm	
SH001	23344088	Push Switch		
SH002	23344088	Push Switch		
SH003	23344088	Push Switch		
SH004	23344088	Push Switch		
SH005	23344088	Push Switch		
■U0032	23783707	P C Board Assy	LED(TLP451, TLP651)	
		- TRANSISTORS -		
QH701	23314344	Transistor, Chip	IMX1	
QH702	23314344	Transistor, Chip	IMX1	
QH703	23314344	Transistor, Chip	IMX1	
QH704	23314344	Transistor, Chip	IMX1	
		- DIODES -		
DH700	23118275	Diode, Zener	RD18M-T1BB2	
DH701	23358546	Diode, LED	NSPW310BS	
DH702	23358546	Diode, LED	NSPW310BS	
DH703	23358546	Diode, LED	NSPW310BS	
DH704	23358546	Diode, LED	NSPW310BS	
DH705	23358546	Diode, LED	NSPW310BS	
DH706	23358546	Diode, LED	NSPW310BS	
DH707	23358546	Diode, LED	NSPW310BS	
DH708	23358546	Diode, LED	NSPW310BS	
DH709	23358546	Diode, LED	NSPW310BS	
DH710	23358546	Diode, LED	NSPW310BS	
DH711	23358546	Diode, LED	NSPW310BS	
DH712	23358546	Diode, LED	NSPW310BS	
DH720	23118275	Diode, Zener	RD18M-T1BB2	
DH721	23118275	Diode, Zener	RD18M-T1BB2	
DH722	23118275	Diode, Zener	RD18M-T1BB2	
DH723	23118275	Diode, Zener	RD18M-T1BB2	
		- RESISTORS -		
RH701	24872472	Res, Chip	4.7kΩ	J 1/16W
RH702	24872471	Res, Chip	470Ω	J 1/16W
RH703	24872470	Res, Chip	47Ω	J 1/16W
RH704	24872472	Res, Chip	4.7kΩ	J 1/16W
RH705	24872471	Res, Chip	470Ω	J 1/16W
RH706	24872470	Res, Chip	47Ω	J 1/16W
RH707	24872472	Res, Chip	4.7kΩ	J 1/16W
RH708	24872471	Res, Chip	470Ω	J 1/16W
RH709	24872470	Res, Chip	47Ω	J 1/16W
RH710	24872472	Res, Chip	4.7kΩ	J 1/16W
RH711	24872471	Res, Chip	470Ω	J 1/16W
RH712	24872470	Res, Chip	47Ω	J 1/16W
		- MISCELLANEOUS -		
PH700	70164729	Plug	3P, 1.25mm	

T O S H I B A C O R P O R A T I O N
1-1, SHIBAURA 1- CHOME, MINATO - KU, TOKYO 105 - 8001, JAPAN